APPENDIX D
PLANS AND TECHNICAL DATA

SR 99 BORED TUNNEL ALTERNATIVE DESIGN-BUILD PROJECT

DRAGADOS USA – TUTOR PERINI – HNTB

Washington State Department of Transportation

SEATTLE TUNNEL PARTNERS

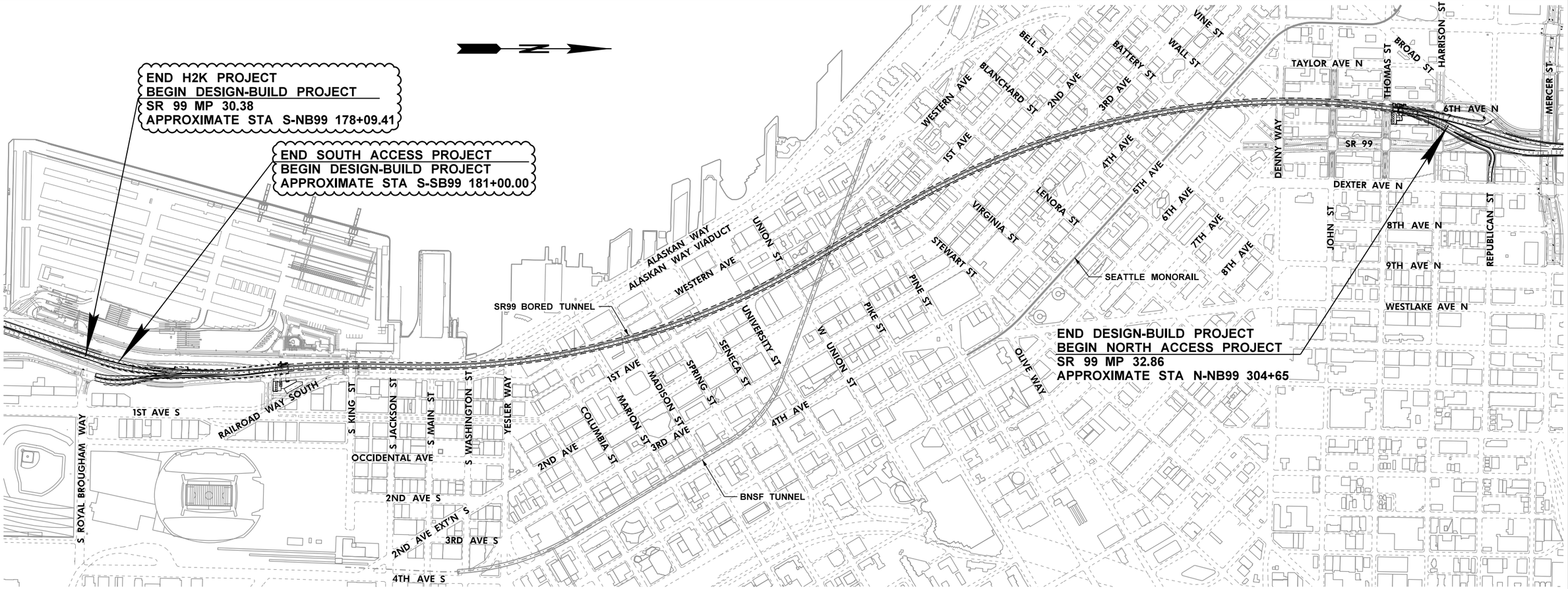

ALASKAN WAY VIADUCT REPLACEMENT PROJECT SR 99 BORED TUNNEL

OCTOBER 28, 2010

FILE NAME	IP_PWP:dms69910\46055-Txx-14GD001_OptM.DLV				REGION NO.	STATE	FED.AID PROJ.NO.
TIME	20-OCT-2010 11:01				10	WASH	
DATE	20-OCT-2010				JOB NUMBER		
PLOTTED BY	groe						
DESIGNED BY	G. ROE				CONTRACT NO.		LOCATION NO.
ENTERED BY	G. ROE						
CHECKED BY	M. COWARD						
PROJ. ENGR.	S. EVERETT						
REGIONAL ADM.	R. PAANANEN	REVISION	DATE	BY			

RICHARD M. JOHNSON STATE OF WASHINGTON 43017 REGISTERED PROFESSIONAL ENGINEER

RFP DESIGN
SUBMITTED BY
SEATTLE TUNNEL PARTNERS

NOT FOR CONSTRUCTION

Washington State Department of Transportation
U.S. Department of Transportation Federal Highway Administration
City of Seattle

ALASKAN WAY VIADUCT
REPLACEMENT PROJECT
SR 99 BORED TUNNEL
CONTRACT PACKAGE 14

COVER AND TITLE

GD001

SHEET 1 OF 208 SHEETS

INDEX OF DRAWINGS

FILE NAME	IP_PWP:dms69910\46055-Txx-14IN001_OptM.DLV
TIME	20-OCT-2010 11:01
DATE	20-OCT-2010
PLOTTED BY	groe
DESIGNED BY	G. ROE
ENTERED BY	G. ROE
CHECKED BY	M. COWARD
PROJ. ENGR.	S. EVERETT
REGIONAL ADM.	R. PAANANEN

REVISION | DATE | BY

REGION NO. 10 | STATE WASH | FED.AID PROJ.NO.

JOB NUMBER

CONTRACT NO. | LOCATION NO.

MICHAEL R. COWARD — STATE OF WASHINGTON — 22502 — REGISTERED PROFESSIONAL ENGINEER

RFP DESIGN

SUBMITTED BY
SEATTLE TUNNEL PARTNERS

NOT FOR CONSTRUCTION

Washington State Department of Transportation

U.S. Department of Transportation Federal Highway Administration

City of Seattle

ALASKAN WAY VIADUCT
REPLACEMENT PROJECT
SR 99 BORED TUNNEL
CONTRACT PACKAGE 14

INDEX OF DRAWINGS

IN001

SHEET 2 OF 208 SHEETS

END H2K2 PROJECT
BEGIN DESIGN-BUILD PROJECT
SR 99 MP 30.38
APPROXIMATE STA S-NB99 178+09.41

END SOUTH ACCESS PROJECT
BEGIN DESIGN-BUILD PROJECT
APPROXIMATE STA S-SB99 181+00.00

EQUATION
S-NB99 194+50.00 BK =
BT99 195+46.86, 5.40' RT AHD

T24N, R4E

T 24 N
T 25 N

T25N, R4E

ALASKAN WAY VIADUCT BRIDGE
No. 099/540NB AND 099/540SB
INCLUDED IN PROJECT

ELLIOTT BAY

S ROYAL BROUGHAM WAY
S KING ST
2ND AVE S
4TH AVE S
YESLER WAY
SR99 BORED TUNNEL
WESTERN AVE
1ST AVE
2ND AVE
BUS TUNNEL
3RD AVE
BNSF TUNNEL
4TH AVE
5TH AVE
COLUMBIA ST
MARION ST
MADISON ST
SPRING ST
SENECA ST
UNIVERSITY ST
UNION ST
PIKE ST
PINE ST
STEWART ST
BATTERY ST
ELLIOTT BAY INTERCEPTOR
ELLIOTT AVE
WESTERN AVE
1ST AVE
2ND AVE
3RD AVE
4TH AVE
5TH AVE
6TH AVE
6TH AVE N
SEATTLE MONORAIL
DENNY WAY
JOHN ST
THOMAS ST
BROAD ST
HARRISON ST
REPUBLICAN ST
MERCER ST
ROY ST
BROAD ST

EQUATION
BT99 288+20 BK =
N-NB99 300+00.00, 5.40' LT AHD

END DESIGN-BUILD PROJECT
BEGIN NORTH ACCESS PROJECT
SR 99 MP 32.86
APPROXIMATE STA N-NB99 304+65

EQUATION
N-NB99 315+19.96 BK=
AURORA 310+38.39, 17.00' RT AHD

END NORTH ACCESS PROJECT
SR 99 MP 32.91
STA AURORA 311+30.00

PROJECT AREA
LOCATION MAP

PUGET SOUND

PROJECT VICINITY
ELLIOTT BAY
99
5
90
520
SEATTLE
PROJECT AREA

PROJECT VICINITY MAP

0 400 800
SCALE IN FEET

FILE NAME	IP_PWP:dms69910\46055-Txx-14VM001_OptM.DLV				REGION NO. 10	STATE WASH	FED.AID PROJ.NO.
TIME	22-OCT-2010 09:16				JOB NUMBER		
DATE	22-OCT-2010						
PLOTTED BY	groe						
DESIGNED BY	G. ROE				CONTRACT NO.		LOCATION NO.
ENTERED BY	G. ROE						
CHECKED BY	M. COWARD						
PROJ. ENGR.	S. EVERETT						
REGIONAL ADM.	R. PAANANEN	REVISION	DATE	BY			

MICHAEL R. COWARD
STATE OF WASHINGTON
22502
REGISTERED PROFESSIONAL ENGINEER

RFP DESIGN
SUBMITTED BY
SEATTLE TUNNEL PARTNERS

NOT FOR CONSTRUCTION

Washington State Department of Transportation
U.S. Department of Transportation Federal Highway Administration
City of Seattle

ALASKAN WAY VIADUCT
REPLACEMENT PROJECT
SR 99 BORED TUNNEL
CONTRACT PACKAGE 14

VICINITY MAP

VM001

SHEET 3 OF 208 SHEETS

ABBREVIATIONS:

&	AND
@	AT
Ø	DIAMETER
℄	CENTERLINE
°	DEGREES
'	FEET, MINUTES
'/FT	FEET PER FOOT
"	INCHES, SECONDS
PL	PLATE
#	POUNDS, NUMBER
%	PERCENT
A	AREA
A/C	ASPHALTIC CONCRETE (WSDOT), ASPHALT CONCRETE (COS /SPU)
A/G	AT GRADE
AAC	ALL ALUMINUM CONDUCTOR
AATFI	ABANDONED ACCORDING TO FIELD INSPECTION
AATUR	ABANDONED ACCORDING TO UTILITY RECORDS
ABAN	ABANDONED (COS/SPU)
ABUT	ABUTMENT
AC	AERIAL COMMUNICATIONS
ACP	ASPHALT CONCRETE PANEL (WSDOT)
ACSR	ALUMINUM CONDUCTOR STEEL REINFORCED
ADM	ADMINISTRATOR
ADT	AVERAGE DAILY TRAFFIC
AL	ALUMINUM CONDUCTOR
AREMA	AMERICAN RAILWAY ENGINEERING AND MAINTENANCE OF WAY ASSOCIATION
ASPH	ASPHALT
ASYM	ASYMMETRICAL
ATB	ASPHALT TREATED BASE
AUX	AUXILIARY
AWG	AMERICAN WIRE GAUGE
B/B	BACK-TO-BACK
BFP	BACK FLOW PREVENTER
BH	BORE HOLE
BIT	BITUMINOUS
BJF	BITUMINOUS JOINT FILLER
BK	BACK
BKF	BACKFILL
BL	BASELINE
BLST	BALLAST
BNSF	BURLINGTON NORTHERN SANTA FE RAILWAY
BOC	BACK OF CURB
BOT	BOTTOM
BP	BEGIN POINT
BR	BRIDGE
BRG	BEARING
BT	BORED TUNNEL
BTW	BETWEEN
BVC	BEGIN VERTICAL CURVE
C	CURVE, CONDUIT
C/L	CURB LINE
CADD	COMPUTER AIDED DRAFTING AND DESIGN
CANT	CANTILEVER
CB	CATCH BASIN
CBD	CENTRAL BUSINESS DISTRICT
CCP	CEMENT CONCRETE PAVEMENT
CCR	COMPACT CONCENTRIC ROUND CONDUCTOR
CDF	CONTROL DENSITY FILL
CE	CONSTRUCTION EASEMENT, CATEGORICALLY EXEMPTION/EXCLUSION (SEPA/NEPA)
CEM	CEMENT
CF	CUBIC FEET
CFF	CAP FOR FUTURE
CG	CENTER OF GRAVITY
CIDH	CAST IN DRILLED HOLES
CIP	CAST-IN-PLACE
CKT	CIRCUIT
CMS	CHANGEABLE MESSAGE SIGN
CMST	CASEMENT
CND	CONDUIT
CO	CUTOUTS
COMM	COMMUNICATIONS
COND	CONDUCTOR, CONDUIT
CONST, CONSTR	CONSTRUCTION
CONT	CONTINUOUS
COORD	COORDINATE
COS	CITY OF SEATTLE
CP	COMMUNICATION PANEL (WSDOT)
CR	COMPRESSED ROUND CONDUCTOR (3%)
CS	CENTRIFUGAL SWITCH, CONTROL SWITCH
CSBC	CRUSHED SURFACE BASE COURSE
CSL	CROSS SONIC LOGGING
CU	COPPER
CU IN	CUBIC INCHES
CV	CABLE VAULT
D	DEPTH
DATFI	DEPICTED ACCORDING TO FIELD INSPECTION
DB	DUCT BANK
DI	DUCTILE IRON
DIAPH	DIAPHRAGM
DIP	DUCTILE IRON PIPE
DISC	DISCONNECT
DIST	DISTRIBUTION
DMS	DYNAMIC MESSAGE SIGN
DOC	DEGREE OF CURVATURE
DRWY	DOWNSPOUT
DS	DRIVEWAY
DWG(S)	DRAWING(S)
E	EAST, EASTING, ELECTRICAL
E/P	EDGE OF PAVEMENT
E/S	EDGE OF SHOULDER
E/W	EAST/WEST
EA	EACH
EATFI	EMPTY ACCORDING TO FIELD INSPECTION
ECD	ELECTRICAL CONDUIT
ECR	END CURB RETURN
EDPM	ETHYLENE PROPYLENE DIENE M-CLASS RUBBER
EF	EACH FACE
EL, ELEV	ELEVATION
ELEC	ELECTRICAL, ELECTROLYSIS
ELI	INTEGRA TELECOM
EOI	END OF INFORMATION
EOP	EDGE OF PAVEMENT
EORI	END OF UTILITY RECORD INFORMATION
EP	END POINT
EQN	EQUATION
ESMT	EASEMENT
ETS	ELECTROLYSIS TEST STATION
EV	ELECTRICAL VAULT
EVC	END VERTICAL CURVE
EXC	EXCAVATION
EXIST	EXISTING
EXP	EXPANSION
F TO F	FACE TO FACE
FC	FIBER CONDUIT, FLEXIBLE CONNECTION
FDC	FIRE DEPARTMENT CONNECTION
FDN	FOUNDATION
FF	FAR FACE
FFS	FIXED FIRE SUPPRESSION
FG	FIBERGLASS CONDUIT, FINISHED GRADE
FH	FIRE HYDRANT
FHV	FIRE HOSE VALVE
FIN	FINISH, FINISHED
FIPT	FEMALE INLET PIPE THREAD
FL	FLANGED, FLOW LINE
FN	FENCE
FO	FIBER OPTIC
FOR	FIBER OPTIC RECEIVER
FOT	FIBER OPTIC TRANSMITTER
FP	FIRE PROTECTION
FTB	FLUIDIZED THERMAL BACKFILL
FTG	FOOTING
G	GAS, GREEN, GROUND
GA	GAUGE
GALV	GALVANIZED
GIR	GIRDER
GND	GROUND
GP	GUY POLE
GR	GRADE (WSDOT)
GRHH	GROUND ROD HANDHOLE
GTS	GAS TEST STATION
GVL	GRAVEL
H2K	S. HOLGATE STREET TO S. KING STREET PROJECT
HAR	HIGHWAY ADVISORY RADIO
HEX	HEXAGONAL
HH	HANDHOLE
HMA	HOT MIXED ASPHALT
HORIZ	HORIZONTAL
HS	HIGH STRENGTH
HSS	HIGH STRENGTH STEEL
HVA	HOSE VALVE ASSEMBLY
HVC-N	HOSE VALVE CABINET - NORTHBOUND
HVC-S	HOSE VALVE CABINET - SOUTHBOUND
IE	INVERT ELEVATION
INV	INVERT
ITS	INTELLIGENT TRANSPORTATION SYSTEM
IV	HEADER ISOLATION VALVE
JB	JUNCTION BOX
JN	JACKETED NEUTRAL
KC	KING COUNTY
kcmil	KILO (1000) CIRCULAR MILS
L	LENGTH
LB	POUND, POUNDS, LOAD BREAK
LONG, LONGIT	LONGITUDINAL
LP	LIGHT POLE, LIGHTING PANEL, LOW POINT, LOW PRESSURE (WSDOT)
LPPS	LOW POINT PUMP STATION
LPR	LICENSE PLATE READER
LT	LEFT
MAINT	MAINTENANCE
MCI	VERIZON BUSINESS
MED	MEDIAN
MH	MANHOLE
MIC	MONUMENT IN CASE
MJ	MECHANICAL JOINT
ML	MONUMENT LINE
MOA	MEMORANDUM OF AGREEMENT
MON	MONUMENT
MOU	MEMORANDUM OF UNDERSTANDING
MOW	MAINTENANCE OF WAY
MSE	MECHANICALLY STABILIZED EARTH
N	NORTH, NORTHING, NEUTRAL (WSDOT)
N	NORTH (COS /SPU)
N/S	NORTH/SOUTH
N/W	NORTH/WEST
NAC	NO ASSOCIATED CABLE FOUND FROM UTILITY STRUCTURE
NAP	NO ASSOCIATED PIPING FOUND FROM UTILITY STRUCTURES
NAVD 88	NATIONAL AMERICAN VERTICAL DATUM 1988
NB	NORTHBOUND
NBL	NON-LOAD BREAK
NC	NORMALLY CLOSED
NEPA	NATIONAL ENVIRONMENTAL POLICY ACT
NEXT LINK	XO COMMUNICATIONS
NF	NEAR FACE
NGS	UNITED STATES NATIONAL GEODETIC SURVEY
NGVD	NATIONAL GEODETIC VERTICAL DATUM (1929)
NIC	NOT IN CONTRACT
NO	NUMBER (WSDOT), NORMALLY OPEN
No.	NUMBER (COS /SPU)
NRN	NO RISER NUMBER
NST	NO STEEPER THAN
NTS	NOT TO SCALE
OC	OVERHEAD COMMUNICATIONS, ON CENTER
OF	OVERHEAD FIBER
OH	OVERHEAD
OHW	ORDINARY HIGH WATER
OP	OVERHEAD POWER
P	PEDESTRIAN, POLE
P/L	PROPERTY LINE
PAVT	PAVEMENT
PB	PULLBOX, PUSHBUTTON
PC	PRECAST, POINT OF CURVATURE
PCB	PRIMARY CONTROL LINE
PCC	POINT OF COMPOUND CURVE, PORTLAND CEMENT CONCRETE, POWER CONTROL CENTER
PCCP	PORTLAND CEMENT CONCRETE PAVEMENT
PED	PEDESTRIAN
PGL	PROFILE GRADE LINE
PI	POINT OF INTERSECTING TANGENTS ON HORIZONTAL CURVE
POA	POLE ORIENTATION ANGLE
POB	POINT OF BEGINNING
POC	POINT ON CURVE, POINT OF CONNECTION
POE	POINT OF ENDING
POS	PORT OF SEATTLE
POT	POINT ON TANGENT
POVC	POINT OF VERTICAL CURVE
PP	POWER POLE, POWER PANEL (WSDOT)
PPB	PEDESTRIAN PUSH BUTTON
PROJ	PROJECT
PS	PRESTRESSED
PSG	PRESTRESSED GIRDER
PT	POINT OF TANGENCY, POINT
PTZ	PAN/TILT/ZOOM
PV	PAVEMENT GRADING, PANEL VAULT
PVC	POINT OF VERTICAL CURVE, POLYVINYL CHLORIDE
PVI	POINT OF INTERSECTING TANGENTS ON VERTICAL CURVE
PVRC	POINT OF REVERSE VERTICAL CURVE
PVMT	PAVEMENT
PVT	POINT OF VERTICAL TANGENCY
QL-C	QUALITY LEVEL - C
QL-D	QUALITY LEVEL - D
R	RADIUS (COS /SPU)
R/R, RR	RAILROAD
R/W	RIGHT OF WAY
RC	REINFORCED CONCRETE
RDWY	ROADWAY
REF	REFERENCE
RGSC	RIGID GALVANIZED STEEL CONDUIT
ROW	RIGHT OF WAY
RP	RADIUS POINT, RECEPTACLE PANEL
RRS	RAILROAD SPIKE
RT	RIGHT, RAINTIGHT (WSDOT)
RV	RING VAULT
S	SOUTH
S/W	SIDEWALK
SB	SOUTHBOUND
SCADA	SUPERVISORY CONTROL AND DATA ACQUISITION
SCH	SCHEDULE
SCL	SEATTLE CITY LIGHT
SDOT	SEATTLE DEPARTMENT OF TRANSPORTATION
SDWK, SW	SIDEWALK
SF	SQUARE FOOT, SQUARE FEET, SUPPLY FAN
SG	SIGNAL
SH	SHOULDER, SHIELDED
SHT	SHEET
SIG	SEATTLE INTERNATIONAL GATEWAY
SL	SURVEY LINE, STREET LIGHT, SHELTER LIGHT, SLOPE (COS /SPU)
SMFO	SINGLE MODE FIBER OPTIC
SP	STANDPIPE
SPA	SPACE, SPACING
SPE	SINGLE POINT EXTRACTION
SPEC	SPECIFICATION
SPL	SPLICE
SPU	SEATTLE PUBLIC UTILITIES
SQ FT	SQUARE FOOT, SQUARE FEET
SR	STATE ROUTE
SS	STORM SEWER, SUBSTATION (WSDOT) SANITARY SEWER, SIDE SEWER (COMBINED), STAINLESS STEEL (COS /SPU)
SST	STAINLESS STEEL
ST	STEEL (WSDOT), STRAND, STREET
ST, STIFF	STIFFENER
STA	STATION, STATIONING (WSDOT)
STIRR	STIRRUP
STL	STEEL
STR	STRAIGHT SPLICE
SUE	SUBSURFACE UTILITY ENGINEERING
SVC	SERVICE
SW	SOUTHWEST, SWITCH (WSDOT)
SWGR	SWITCHGEAR
T-46	TERMINAL 46
TCE	TEMPORARY CONSTRUCTION EASEMENT
TEMP	TEMPORARY, TEMPERATURE
TFE	POLYTETRAFLUOREOTHYLENE
TH	TEST HOLE
THW	THERMOPLASTIC HEAT AND WATER RESISTANT INSULATED WIRE
TPG	THROUGH PLATE GIRDER
TR	TECHNICAL REQUIREMENTS
TRANS	TRANSITION
TRANSF	TRANSFORMER
TRANSV	TRANSVERSE
TRCD	TRAFFIC CONDUIT
TS	STRUCTURAL TUBING, TEST STATION (WSDOT)
TYP	TYPICAL
UNK	UNKNOWN
V	VOLT, VAULT, VEHICLE
VAR	VARIABLE, VARIES
VBOX	VALVE BOX
VC	VERTICAL CURVE
VDZ	VIDEO DETECTION ZONE
VIVD	VIDEO IMAGE VEHICLE DETECTION
VMS	VARIABLE MESSAGE SIGN
VPI	VERTICAL POINT OF INTERSECTION
VT	VERTICAL
W	WEST, WATT, WIRE, WIDE FLANGE SHAPE, WHITE LIGHT (WSDOT)
WM	WILLAMETTE MERIDIAN
WOSCA	WASHINGTON OREGON SHIPPERS COOPERATIVE ASSOCIATION
WSPH	WET STANDPIPE / HYDRANT
WTS	WATER TEST STATION
WWF	WELDED WIRE FABRIC
XFRM	TRANSFORMER
XLPE	CROSS-LINKED POLYETHYLENE INSULATION
Y	WYE CONNECTION
ZONE	ZONE
1/C	SINGLE CONDUCTOR
3-1/C	THREE, SINGLE CONDUCTOR

FILE NAME	IP_PWP:dms69910\46055-Txx-14GD002_OptM.DLV
TIME	20-OCT-2010 11:02
DATE	20-OCT-2010
PLOTTED BY	groe
DESIGNED BY	G. ROE
ENTERED BY	G. ROE
CHECKED BY	M. COWARD
PROJ. ENGR.	S. EVERETT
REGIONAL ADM.	R. PAANANEN

REVISION | DATE | BY

REGION NO. 10 | STATE WASH | FED.AID PROJ.NO.

JOB NUMBER

CONTRACT NO. | LOCATION NO.

MICHAEL R. COWARD STATE OF WASHINGTON 22502 REGISTERED PROFESSIONAL ENGINEER

RFP DESIGN

SUBMITTED BY SEATTLE TUNNEL PARTNERS

NOT FOR CONSTRUCTION

Washington State Department of Transportation

U.S. Department of Transportation Federal Highway Administration

City of Seattle

ALASKAN WAY VIADUCT REPLACEMENT PROJECT
SR 99 BORED TUNNEL
CONTRACT PACKAGE 14

ABBREVIATIONS

GD002

SHEET 4 OF 208 SHEETS

LINETYPE LEGEND:

- EDGE OF CONCRETE
- EDGE OF ASPHALT
- CURB WITH SIDEWALK
- CURB (NO WALK)
- HANDRAILING
- GUARD RAIL
- RETAINING WALL
- OUTER EDGE OF PROJECTED ELEVATED TRAVELED SURFACE ROADWAY
- BOTTOM OF ELEVATED ROADWAY (LOW POINTS)
- BUILDING - STRUCTURE
- BUILDING OVERHANG OR AWNING
- RAILROAD -TROLLEY TRACKS
- PAVEMENT MARKING (SKIP STRIPE)
- PAVEMENT MARKING (SOLID STRIPE)
- PAVEMENT MARKING (STOP BAR)
- PAVEMENT MARKING (CROSS WALK)
- SHRUB-BUSHES
- AREA OF VEGETATION
- PROPERTY LINE
- RIGHT OF WAY

LEGEND:

- PARKING METER
- SIGN POST
- LIGHT STANDARD (DOUBLE LAMP)
- LIGHT STANDARD (SINGLE LAMP)
- UNDERDECK LUMINAIRE
- UTILITY POLE
- SIGNAL LIGHT POLE
- STORM CATCH BASIN
- MANHOLE
- BRIDGE DRAIN DOWN SPOUT
- TRAFFIC CONTROLLER CABINET
- VAULT
- RISER
- MONITORING WELL
- RAIL LINE TRACK SWITCH
- FIRE HYDRANT
- WHEEL CHAIR ACCESS RAMP
- COLUMN OR PILLAR
- GUARD POST OR BOLLARD
- MAILBOX
- TELEPHONE BOOTH
- PEDESTRIAN PUSH BUTTON POST
- TREE WELL
- LIGHT POLE
- VALVE
- JUNCTION BOX
- METER
- HEDGE-SHRUBS
- VERTICAL CONDUIT
- ECOLOGY BLOCK
- TRAFFIC BARRIER
- POLE (GUY) ANCHOR
- CULVERT
- PARKING
- TRANSIT
- SHARROW
- BIKE LANE
- PAN TILT ZOOM CAMERA
- FIXED PARKING
- FIRE HOSE CONNECTION
- FIRE HOSE VALVE
- FIRE DEPARTMENT CONNECTION (FDC)
- TRAFFIC FLOW
- FIXED FIRE SUPPRESSION ZONE
- BACKFLOW PREVENTER WITH GATE VALVES
- GATE VALVE
- BALL VALVE
- BUTTERFLY VALVE
- CHECK VALVE
- DELUGE VALVE
- REDUCER (CONCENTRIC)
- THREADED CAP
- WELDED CAP
- ELBOW, TURNED UP
- ELBOW, TURNED DOWN
- TEE, OUTLET UP
- TEE, OUTLET DOWN
- FIRE EXTINGUISHER
- FIRE HOSE VALVE & EXTINGUISHER CABINET FHVC
- PENDANT SPRINKLER HEAD
- PIPE ANCHOR
- PIPE GUIDE
- VERTICAL SUPPORT
- POINT OF CONNECTION
- FLOW SWITCH

FILE NAME	IP_PWP:dms69910\46055-Txx-14GD003_OptM.DLV					
TIME	20-OCT-2010 11:02				REGION NO. 10	STATE WASH	FED.AID PROJ.NO.
DATE	20-OCT-2010					
PLOTTED BY	groe					
DESIGNED BY	G. ROE				JOB NUMBER	
ENTERED BY	G. ROE					
CHECKED BY	M. COWARD				CONTRACT NO.	LOCATION NO.
PROJ. ENGR.	S. EVERETT					
REGIONAL ADM.	R. PAANANEN	REVISION	DATE	BY		

MICHAEL R. COWARD STATE OF WASHINGTON 22503 REGISTERED PROFESSIONAL ENGINEER

RFP DESIGN
SUBMITTED BY
SEATTLE TUNNEL PARTNERS

NOT FOR CONSTRUCTION

Washington State Department of Transportation
U.S. Department of Transportation Federal Highway Administration
City of Seattle

ALASKAN WAY VIADUCT
REPLACEMENT PROJECT
SR 99 BORED TUNNEL
CONTRACT PACKAGE 14

SYMBOLS

GD003

SHEET 5 OF 208 SHEETS

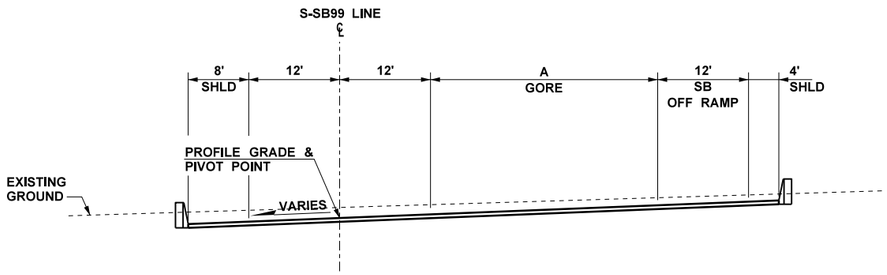

S-SB99 ROADWAY SECTION C

STATION RANGE	A
S-SB99 185+05.15 TO S-SB99 187+00.00	34' - 14'

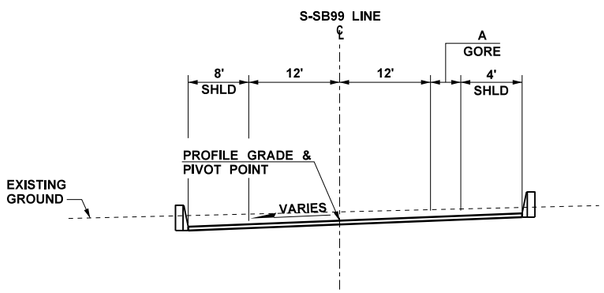

S-SB99 ROADWAY SECTION B

STATION RANGE	A
S-SB99 183+26.01 TO S-SB99 185+05.15	1' - 8'

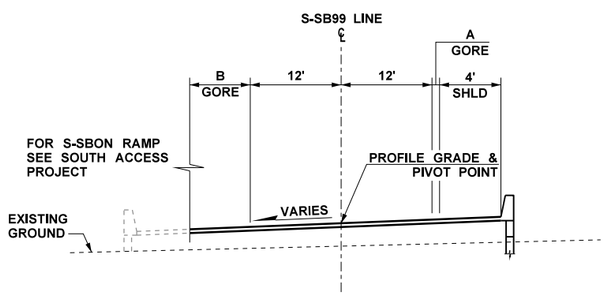

S-SB99 ROADWAY SECTION A

STATION RANGE	A	B
S-SB99 181+00.00 TO S-SB99 183+26.01	0' - 1'	7' - 8'

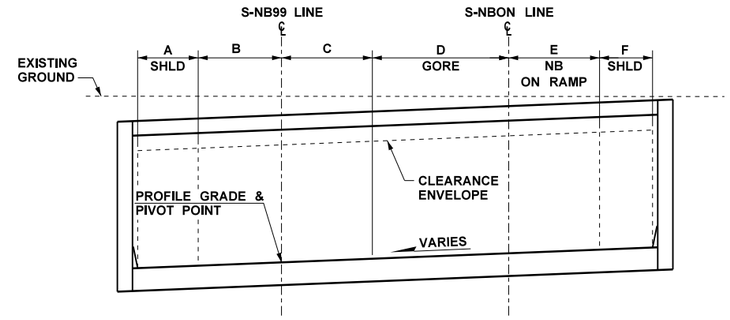

S-NB99 ROADWAY SECTION C

STATION RANGE	A	B	C	D	E	F
S-NB99 184+67.50 TO S-NB99 185+17.54	9.8' - 8'	11'	11'	13.4' - 9.2'	12'	7.4' - 5.3'
S-NB99 185+17.54 TO S-NB99 185+50.51	8'	11'	11'	9.2' - 6.7'	12'	5.3' - 4'
S-NB99 185+50.51 TO S-NB99 187+50.64	8'	11'	11'	6.7' - 0'	12'	4'
S-NB99 187+50.64 TO S-NB99 188+00.64	8'	11'	11'	0'	12'	4' - 2'
S-NB99 188+00.64 TO S-NB99 188+39.51	8'	11'	11'	0'	12'	2'
S-NB99 188+39.51 TO S-NB99 188+89.51	8'	11' - 12'	11'	0'	12'	2'
S-NB99 188+89.51 TO S-NB99 190+50.00	8'	12'	11'	0'	12'	2'
S-NB99 190+50.00 TO S-NB99 192+19.94	8'	12'	11'	0'	12' - 5.2'	2'
S-NB99 192+19.94 TO S-NB99 192+69.94	8'	12' - 11'	11'	0'	5.2' - 3.2'	2'
S-NB99 192+69.94 TO S-NB99 193+50.00	8'	11'	11'	0'	3.2' - 0'	2'

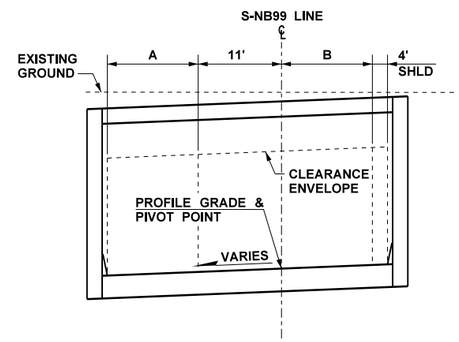

S-NB99 ROADWAY SECTION B

STATION RANGE	A	B
S-NB99 182+00.00 TO S-NB99 183+60.92	12.5'	12'
S-NB99 183+60.92 TO S-NB99 184+17.50	12.5' - 11.5'	12'
S-NB99 184+17.50 TO S-NB99 184+67.50	11.5' - 9.8'	12' - 11'

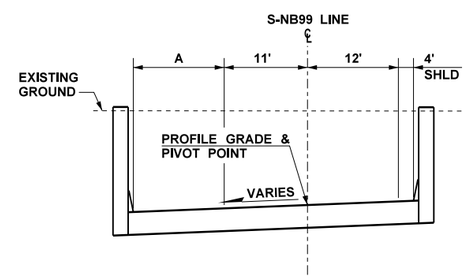

S-NB99 ROADWAY SECTION A

STATION RANGE	A
S-NB99 178+09.41 TO S-NB99 182+00.00	5.5' - 12.5'

NOTES:

1. SEE GD002 AND GD003 FOR ABBREVIATIONS, SYMBOLS, AND LINETYPES.
2. ALL DIMENSIONS ARE IN FEET UNLESS OTHERWISE NOTED.
3. SEE ALIGNMENT SHEETS FOR TRANSITION DETAILS.

FILE NAME	IP_PWP:dms69910\46055-Txx-14RS001_OptM.DLV
TIME	20-OCT-2010 11:02
DATE	20-OCT-2010
PLOTTED BY	groe
DESIGNED BY	D. OLSEN
ENTERED BY	R. GREENLEE
CHECKED BY	S. RINNERT
PROJ. ENGR.	S. EVERETT
REGIONAL ADM.	R. PAANANEN

REVISION | DATE | BY

REGION NO. 10 | STATE WASH | FED.AID PROJ.NO.

JOB NUMBER

CONTRACT NO. | LOCATION NO.

STEPHEN P. RINNERT — STATE OF WASHINGTON — 35682 — REGISTERED PROFESSIONAL ENGINEER

RFP DESIGN

SUBMITTED BY
SEATTLE TUNNEL PARTNERS

NOT FOR CONSTRUCTION

Washington State Department of Transportation
U.S. Department of Transportation Federal Highway Administration
City of Seattle

ALASKAN WAY VIADUCT
REPLACEMENT PROJECT
SR 99 BORED TUNNEL
CONTRACT PACKAGE 14

ROADWAY SECTIONS

RS001

SHEET 6 OF 208 SHEETS

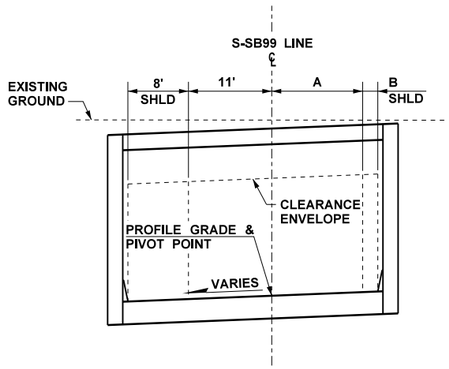

S-SB99 ROADWAY SECTION E

STATION RANGE			A	B
S-SB99 191+50.00	TO	S-SB99 192+28.75	15' - 11'	4'
S-SB99 192+28.75	TO	S-SB99 192+64.32	11'	4' - 2'
S-SB99 192+64.32	TO	S-SB99 194+58.84	11'	2'

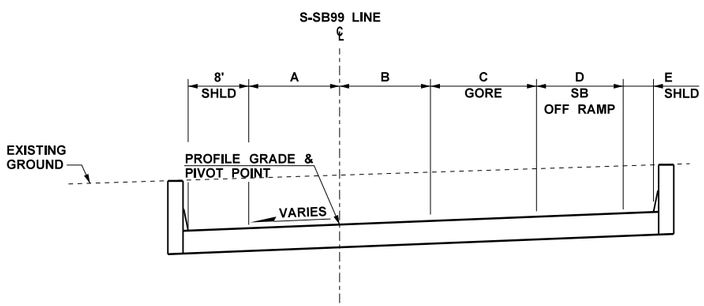

S-SB99 ROADWAY SECTION D

STATION RANGE			A	B	C	D	E
S-SB99 187+00.00	TO	S-SB99 187+57.00	12'	12'	14' - 10.6'	12'	4'
S-SB99 187+57.00	TO	S-SB99 188+07.65	12' - 11'	12'	10.6' - 8'	12'	4'
S-SB99 188+07.65	TO	S-SB99 189+69.57	11'	12'	8' - 0'	12'	4'
S-SB99 189+69.57	TO	S-SB99 191+50.00	11'	12' -11'	0'	12' - 4'	4'

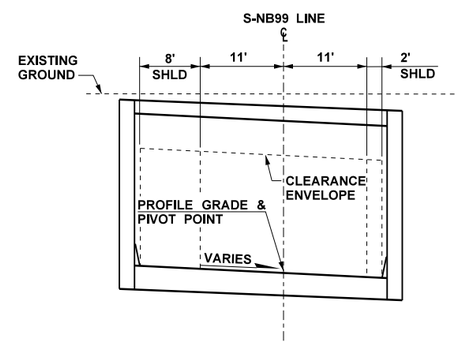

S-NB99 ROADWAY SECTION C

S-NB99 193+50.00 TO S-NB99 194+50.00

NOTES:

1. SEE GD002 AND GD003 FOR ABBREVIATIONS, SYMBOLS, AND LINETYPES.
2. ALL DIMENSIONS ARE IN FEET UNLESS OTHERWISE NOTED.
3. SEE ALIGNMENT SHEETS FOR TRANSITION DETAILS.

FILE NAME	IP_PWP:dms69910\46055-Txx-14RS002_OptM.DLV				REGION NO.	STATE	FED.AID PROJ.NO.
TIME	20-OCT-2010 11:03				10	WASH	
DATE	20-OCT-2010				JOB NUMBER		
PLOTTED BY	groe						
DESIGNED BY	D. OLSEN						
ENTERED BY	R. GREENLEE						
CHECKED BY	S. RINNERT				CONTRACT NO.		LOCATION NO.
PROJ. ENGR.	S. EVERETT						
REGIONAL ADM.	R. PAANANEN	REVISION	DATE	BY			

STEPHEN P. RINNERT — STATE OF WASHINGTON — 33682 — REGISTERED PROFESSIONAL ENGINEER

RFP DESIGN
SUBMITTED BY
SEATTLE TUNNEL PARTNERS

NOT FOR CONSTRUCTION

Washington State Department of Transportation
U.S. Department of Transportation Federal Highway Administration
City of Seattle

ALASKAN WAY VIADUCT
REPLACEMENT PROJECT
SR 99 BORED TUNNEL
CONTRACT PACKAGE 14

ROADWAY SECTIONS

RS002

SHEET 7 OF 208 SHEETS

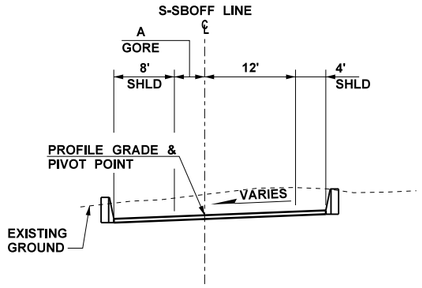

S-SBOFF RAMP ROADWAY SECTION B

STATION RANGE	A
S-SBOFF 7+90.41 TO S-SBOFF 9+38.97	0' - 5.9'

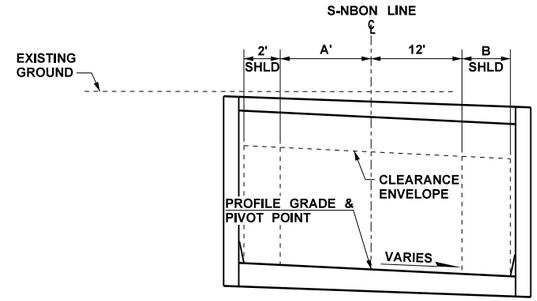

S-NBON RAMP ROADWAY SECTION B

STATION RANGE	A	B
S-NBON 3+60.00 TO S-NBON 5+39.27	11.6' - 0'	8'
S-NBON 5+39.27 TO S-NBON 6+25.55	0'	8' - 7.4'

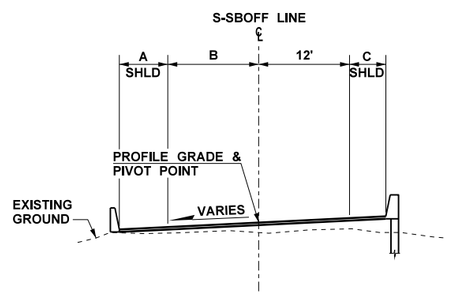

S-SBOFF RAMP ROADWAY SECTION A

STATION RANGE	A	B	C
S-SBOFF 6+00.00 TO S-SBOFF 7+90.41	2' - 8'	0' - 12'	2' - 4'

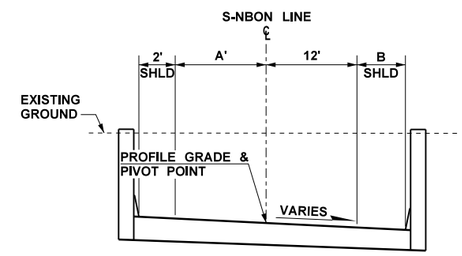

S-NBON RAMP ROADWAY SECTION A

STATION RANGE	A	B
S-NBON 0+50.00 TO S-NBON 3+60.00	12' - 11.6'	2' - 8'

NOTES:

1. SEE GD002 AND GD003 FOR ABBREVIATIONS, SYMBOLS, AND LINETYPES.
2. ALL DIMENSIONS ARE IN FEET UNLESS OTHERWISE NOTED.
3. SEE ALIGNMENT SHEETS FOR TRANSITION DETAILS.

FILE NAME	IP_PWP:dms69910\46055-Txx-14RS003_OptM.DLV
TIME	20-OCT-2010 11:03
DATE	20-OCT-2010
PLOTTED BY	groe
DESIGNED BY	D. OLSEN
ENTERED BY	R. GREENLEE
CHECKED BY	S. RINNERT
PROJ. ENGR.	S. EVERETT
REGIONAL ADM.	R. PAANANEN

REVISION	DATE	BY

REGION NO.	STATE	FED.AID PROJ.NO.
10	WASH	
JOB NUMBER		
CONTRACT NO.		LOCATION NO.

STEPHEN P. RINNERT STATE OF WASHINGTON 33682 REGISTERED PROFESSIONAL ENGINEER

RFP DESIGN
SUBMITTED BY
SEATTLE TUNNEL PARTNERS

NOT FOR CONSTRUCTION

Washington State Department of Transportation
U.S. Department of Transportation Federal Highway Administration
City of Seattle

ALASKAN WAY VIADUCT
REPLACEMENT PROJECT
SR 99 BORED TUNNEL
CONTRACT PACKAGE 14

ROADWAY SECTIONS

RS003

SHEET 8 OF 208 SHEETS

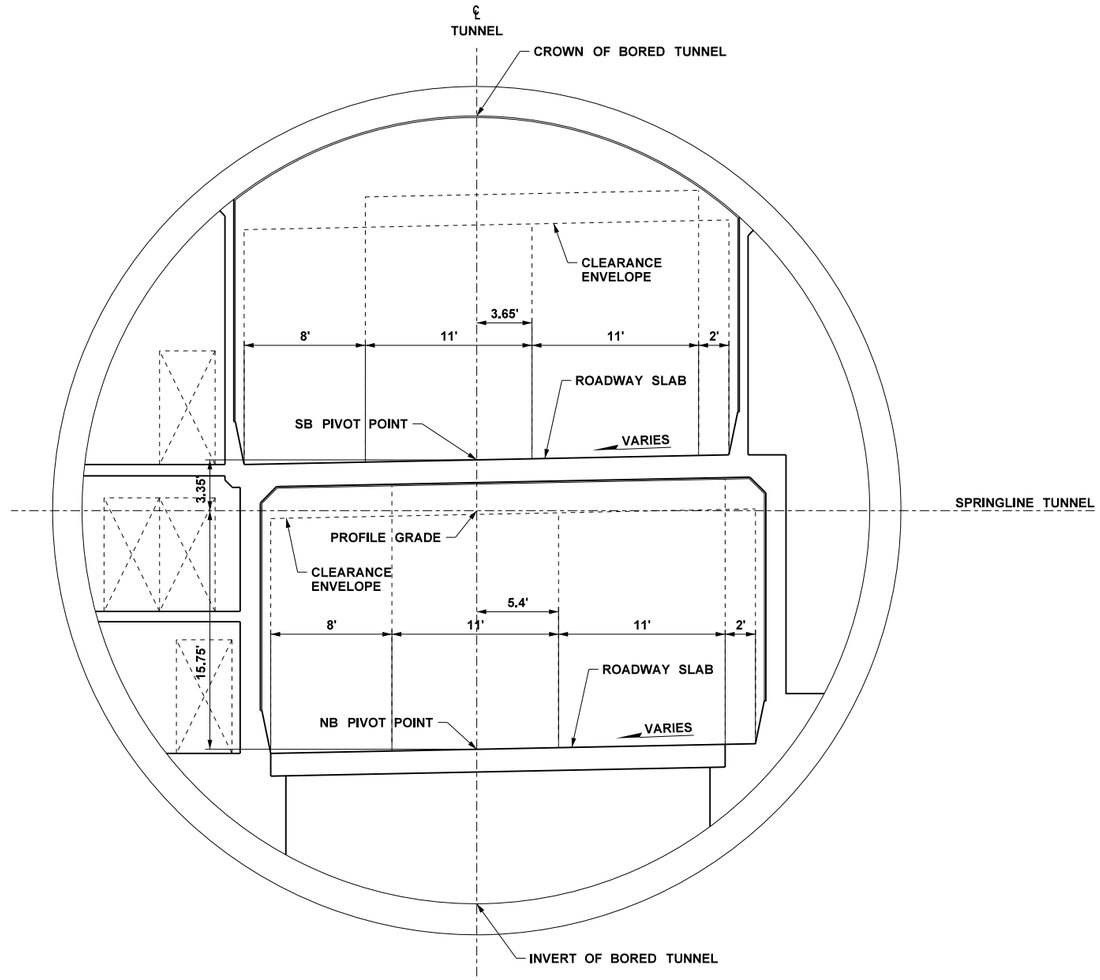

BT99 LINE - SECTION A

BT99 195+46.86 TO BT99 288+20.00

NOTES:

1. SEE GD002 AND GD003 FOR ABBREVIATIONS, SYMBOLS, AND LINETYPES.
2. ALL DIMENSIONS ARE IN FEET UNLESS OTHERWISE NOTED.
4. SEE ALIGNMENT SHEETS FOR TRANSITION DETAILS.

FILE NAME	IP_PWP:dms69910\46055-Txx-14RS004_OptM.DLV				REGION NO.	STATE	FED.AID PROJ.NO.
TIME	20-OCT-2010 11:03				10	WASH	
DATE	20-OCT-2010				JOB NUMBER		
PLOTTED BY	groe						
DESIGNED BY	L. XU				CONTRACT NO.		LOCATION NO.
ENTERED BY	R. GREENLEE						
CHECKED BY	S. RINNERT						
PROJ. ENGR.	S. EVERETT						
REGIONAL ADM.	R. PAANANEN	REVISION	DATE	BY			

STEPHEN P. RINNERT · STATE OF WASHINGTON · 33682 · REGISTERED PROFESSIONAL ENGINEER

RFP DESIGN
SUBMITTED BY
SEATTLE TUNNEL PARTNERS

NOT FOR CONSTRUCTION

Washington State Department of Transportation
U.S. Department of Transportation Federal Highway Administration
City of Seattle

ALASKAN WAY VIADUCT
REPLACEMENT PROJECT
SR 99 BORED TUNNEL
CONTRACT PACKAGE 14

ROADWAY SECTION

RS004

SHEET 9 OF 208 SHEETS

N-SB99 ROADWAY SECTION A

STATION RANGE	A	B
N-SB99 300+00.00 TO N-SB99 302+38.72	0' - 9.5'	
N-SB99 300+00.00 TO N-SB99 301+00.00		2' - 6'

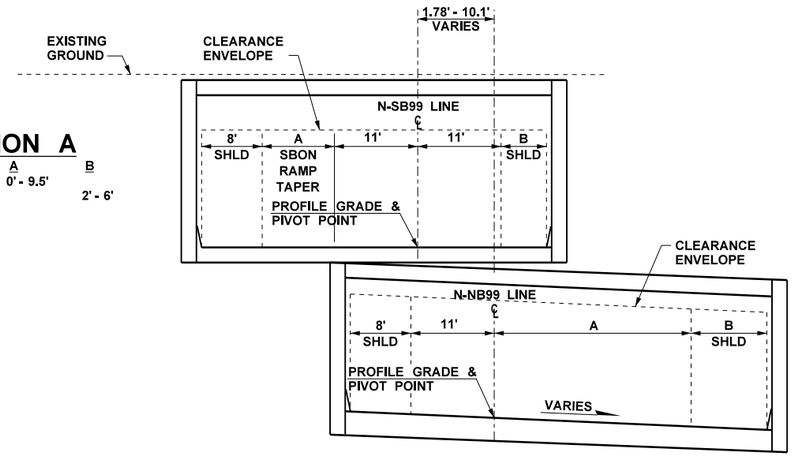

N-NB99 ROADWAY SECTION A

STATION RANGE	A	B
N-NB99 300+00.00 TO N-NB99 302+37.80	11' - 26'	2' - 8'

NOTES:

1. SEE GD002 AND GD003 FOR ABBREVIATIONS, SYMBOLS, AND LINETYPES.
2. ALL DIMENSIONS ARE IN FEET UNLESS OTHERWISE NOTED.
3. SEE ALIGNMENT SHEETS FOR TRANSITION DETAILS.

FILE NAME	IP_PWP:dms69910\46055-Txx-14RS005_OptM.DLV
TIME	20-OCT-2010 11:03
DATE	20-OCT-2010
PLOTTED BY	groe
DESIGNED BY	L. XU
ENTERED BY	R. GREENLEE
CHECKED BY	S. RINNERT
PROJ. ENGR.	S. EVERETT
REGIONAL ADM.	R. PAANANEN

REVISION	DATE	BY

REGION NO.	STATE	FED.AID PROJ.NO.
10	WASH	
JOB NUMBER		
CONTRACT NO.		LOCATION NO.

STEPHEN P. RINNERT — STATE OF WASHINGTON — 33683 — REGISTERED PROFESSIONAL ENGINEER

RFP DESIGN
SUBMITTED BY
SEATTLE TUNNEL PARTNERS

NOT FOR CONSTRUCTION

Washington State Department of Transportation
U.S. Department of Transportation Federal Highway Administration
City of Seattle

ALASKAN WAY VIADUCT REPLACEMENT PROJECT
SR 99 BORED TUNNEL
CONTRACT PACKAGE 14

ROADWAY SECTIONS

RS005

SHEET 10 OF 208 SHEETS

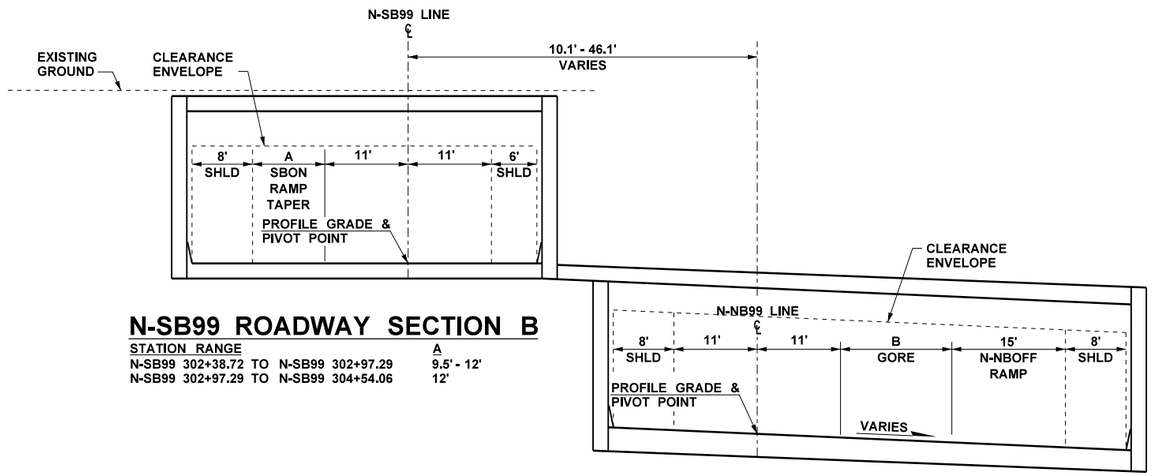

N-SB99 ROADWAY SECTION B

STATION RANGE	A
N-SB99 302+38.72 TO N-SB99 302+97.29	9.5' - 12'
N-SB99 302+97.29 TO N-SB99 304+54.06	12'

N-NB99 ROADWAY SECTION B

STATION RANGE	B
N-NB99 302+37.80 TO N-NB99 304+45.45	0' - 14.7'

NOTES:

1. SEE GD002 AND GD003 FOR ABBREVIATIONS, SYMBOLS, AND LINETYPES.
2. ALL DIMENSIONS ARE IN FEET UNLESS OTHERWISE NOTED.
3. SEE ALIGNMENT SHEETS FOR TRANSITION DETAILS.

FILE NAME	IP_PWP:dms69910\46055-Txx-14RS006_OptM.DLV					
TIME	20-OCT-2010 11:04					
DATE	20-OCT-2010					
PLOTTED BY	groe					
DESIGNED BY	L. XU					
ENTERED BY	R. GREENLEE					
CHECKED BY	S. RINNERT					
PROJ. ENGR.	S. EVERETT					
REGIONAL ADM.	R. PAANANEN	REVISION	DATE	BY		

REGION NO.	STATE	FED.AID PROJ.NO.
10	WASH	
JOB NUMBER		
CONTRACT NO.		LOCATION NO.

STEPHEN P. RINNERT · STATE OF WASHINGTON · 35682 · REGISTERED PROFESSIONAL ENGINEER

RFP DESIGN
SUBMITTED BY
SEATTLE TUNNEL PARTNERS

NOT FOR CONSTRUCTION

Washington State Department of Transportation
U.S. Department of Transportation Federal Highway Administration
City of Seattle

ALASKAN WAY VIADUCT
REPLACEMENT PROJECT
SR 99 BORED TUNNEL
CONTRACT PACKAGE 14

ROADWAY SECTIONS

RS006

SHEET 11 OF 208 SHEETS

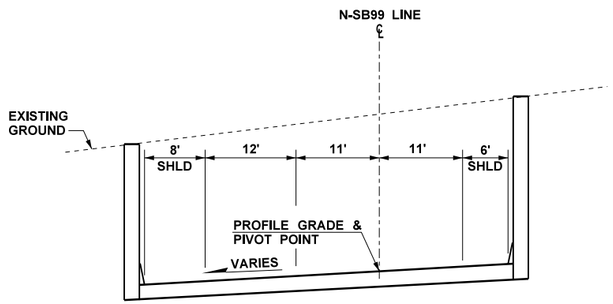

N-SB99 ROADWAY SECTION C

N-SB99 304+54.06 TO N-SB99 304+74.47

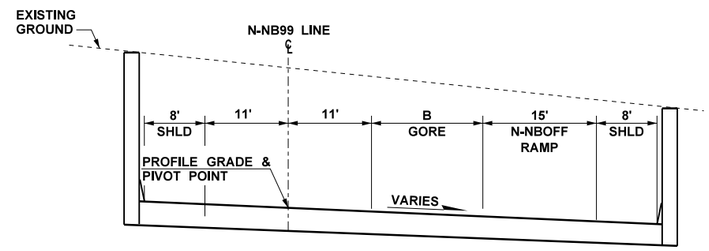

N-NB99 ROADWAY SECTION C

STATION RANGE	B
N-NB99 304+45.45 TO N-NB99 304+65.00	14.7' - 16'

NOTES:

1. SEE GD002 AND GD003 FOR ABBREVIATIONS, SYMBOLS, AND LINETYPES.
2. ALL DIMENSIONS ARE IN FEET UNLESS OTHERWISE NOTED.
3. SEE ALIGNMENT SHEETS FOR TRANSITION DETAILS.

FILE NAME	IP_PWP:dms69910\46055-Txx-14RS007_OptM.DLV					
TIME	20-OCT-2010 11:04				REGION NO. 10	STATE WASH
DATE	20-OCT-2010					FED.AID PROJ.NO.
PLOTTED BY	groe				JOB NUMBER	
DESIGNED BY	L. XU					
ENTERED BY	R. GREENLEE					
CHECKED BY	S. RINNERT				CONTRACT NO.	LOCATION NO.
PROJ. ENGR.	S. EVERETT					
REGIONAL ADM.	R. PAANANEN	REVISION	DATE	BY		

STEPHEN P. RINNERT — STATE OF WASHINGTON — 33682 — REGISTERED PROFESSIONAL ENGINEER

RFP DESIGN

SUBMITTED BY SEATTLE TUNNEL PARTNERS

NOT FOR CONSTRUCTION

Washington State Department of Transportation

U.S. Department of Transportation Federal Highway Administration

City of Seattle

ALASKAN WAY VIADUCT REPLACEMENT PROJECT
SR 99 BORED TUNNEL
CONTRACT PACKAGE 14

ROADWAY SECTIONS

RS007

SHEET 12 OF 208 SHEETS

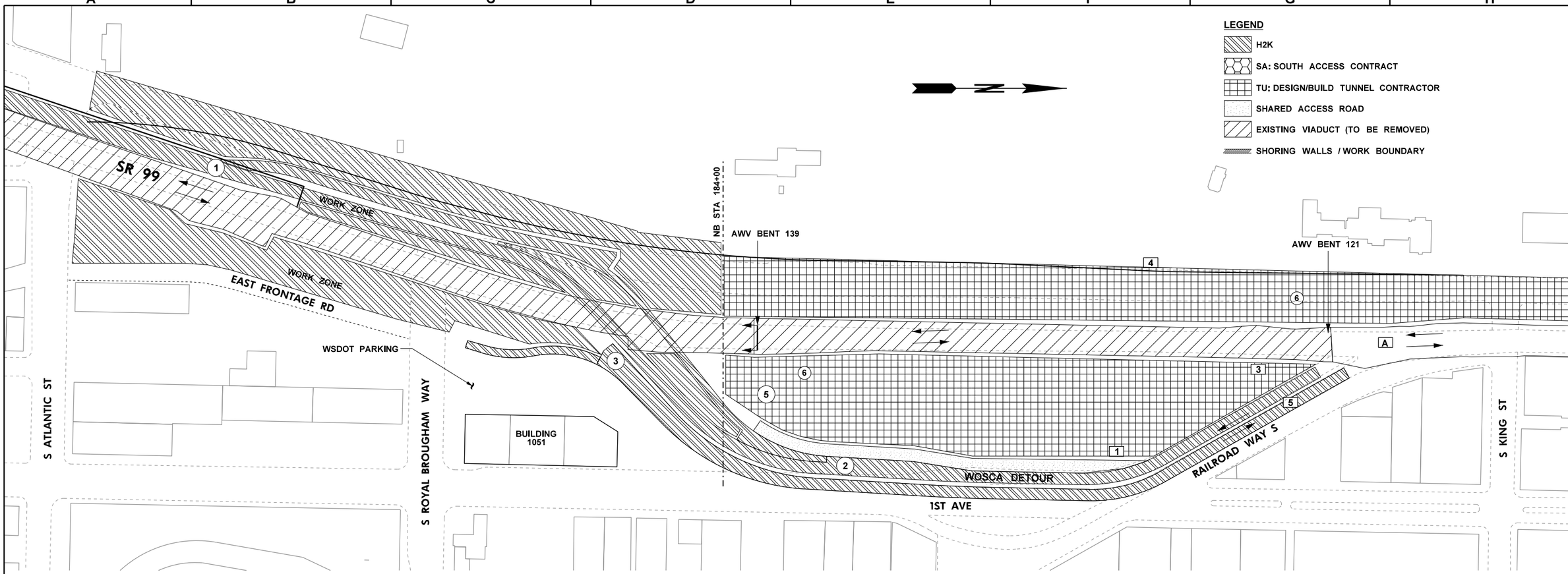

NOTES	CONTRACT		
1	TU	BUILD AND MAINTAIN SHARED ACCESS ROAD	AUGUST 2011 - MAY 2016
3	TU	DISTRIBUTION AND COMMUNICATION DUCT BANKS.	WORK COMPLETE, INCLUDING TIE-IN PRIOR TO DEMOLITION OF BENTS 121 - 124
4	-	BNSF TAIL TRACK RUNS ALONG THE WEST PERIMETER OF THE STAGING AREA FROM ROYAL BROUGHAM TO KING STREET. SEE PLAN SHEETS.	
5	TU	RAILROAD WAY RAMPS ABOVE. STAGING PERMITTED BELOW RAMPS.	

TRAFFIC SHIFTS

NOTES	CONTRACT	TRAFFIC ON	
A	H2K	EXISTING VIADUCT	UNTIL MAY 4, 2012

PHASE 1A AUGUST 15, 2011 - MAY 4, 2012

ACTIVITY IDENTIFIER	CONTRACT	ACTIVITY	TIMING	EARLY CONSTRUCTION OPTIONS
1	H2K	CONSTRUCT WEST HALF OF BRIDGE H2K 99/540.	WEST HALF SEPT 2012 - FEB 2012	H2K - JULY 2011*
2	H2K	CONSTRUCT SB WOSCA DETOUR FROM H2K STRUCTURE NORTH TO THE ALASKAN WAY VIADUCT RAMPS		
3	H2K	CONSTRUCT NB WOSCA DETOUR EAST OF THE EXISTING VIADUCT		
5	H2K / TU	UTILITY RELOCATIONS		
	H2K	COMMUNICATIONS		
	TU	115kv - POWER (DURING SCL SPRING WINDOW)		MARCH 2012 - MAY 2012
	TU	WATER, STORM AND SEWER		OCTOBER 2011 - JANUARY 2012
6	TU	BEGIN SUPPORT OF EXCAVATION (OUTSIDE OF VIADUCT FOOTPRINT)		JANUARY 2012 - APRIL 2012

* H2K STAGING AND TIMING AS REPRESENTED IN WSDOT S. HOLGATE TO S. KINGSTREET VIADUCT REPLACEMENT PROJECT SIMULATION

0 100 200
SCALE IN FEET

FILE NAME	IP_PWP:dms69910\46055-Txx-14SC001_OptM.DLV				
TIME	20-OCT-2010 11:04				
DATE	20-OCT-2010				
PLOTTED BY	groe				
DESIGNED BY					
ENTERED BY					
CHECKED BY					
PROJ. ENGR.	S. EVERETT				
REGIONAL ADM.	R. PAANANEN	REVISION	DATE	BY	

REGION NO.	STATE	FED.AID PROJ.NO.
10	WASH	
JOB NUMBER		
CONTRACT NO.		LOCATION NO.

RFP DESIGN
SUBMITTED BY
SEATTLE TUNNEL PARTNERS

NOT FOR CONSTRUCTION

Washington State Department of Transportation
U.S. Department of Transportation Federal Highway Administration
City of Seattle

ALASKAN WAY VIADUCT
REPLACEMENT PROJECT
SR 99 BORED TUNNEL
CONTRACT PACKAGE 14

CONSTRUCTION SEQUENCING

SC001

SHEET 13 OF 208 SHEETS

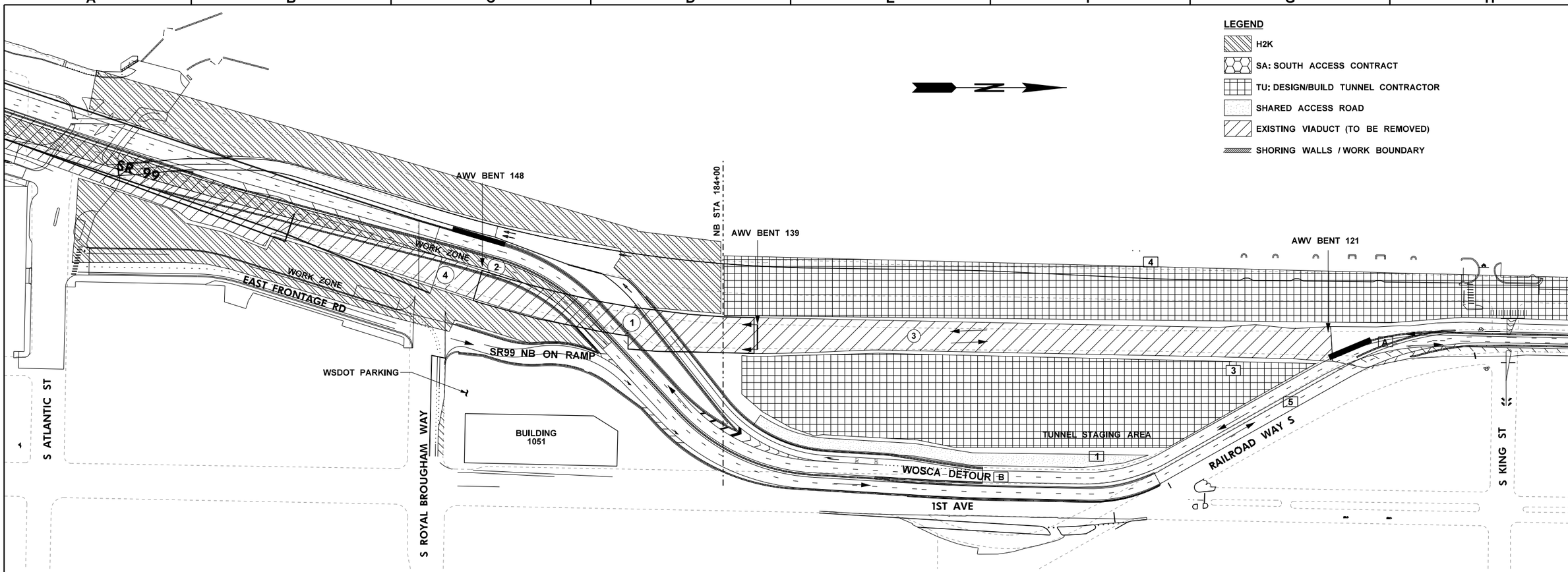

NOTES	CONTRACT		
1	TU	BUILD AND MAINTAIN SHARED ACCESS ROAD	AUGUST 2011 - MAY 2016
3	TU	DISTRIBUTION AND COMMUNICATION DUCT BANKS.	WORK COMPLETE, INCLUDING TIE-IN PRIOR TO DEMOLITION OF BENTS 121 - 124
4	-	BNSF TAIL TRACK RUNS ALONG THE WEST PERIMETER OF THE STAGING AREA FROM ROYAL BROUGHAM TO KING STREET. SEE PLAN SHEETS.	
5	TU	RAILROAD WAY RAMPS ABOVE. STAGING PERMITTED BELOW RAMPS.	

TRAFFIC SHIFTS

NOTES	CONTRACT	TRAFFIC ON	
A	H2K	EXISTING VIADUCT	UNTIL MAY 4, 2012
B	H2K	WOSCA DETOUR	MAY 14, 2012 - DECEMBER 2013 (LIMITED WIDTH AT STRUCTURE) DECEMBER 2013 - JUNE 2014 (FULL WIDTH)

TRAFFIC CLOSURES

ROADWAY MOVEMENT	DURATION
SOUTHBOUND SR-99	10 DAY CLOSURE*
NORTHBOUND SR-99	4 DAY CLOSURE*

* H2K STAGING AND TIMING AS REPRESENTED IN WSDOT S. HOLGATE TO S. KINGSTREET VIADUCT REPLACEMENT PROJECT SIMULATION

PHASE 1B MAY 4, 2012 - MAY 14, 2012 (SR-99 CLOSURE)

ACTIVITY IDENTIFIER	CONTRACT	ACTIVITY	TIMING	EARLY CONSTRUCTION OPTIONS
1	H2K	DEMO VIADUCT FROM BENT 139 TO 148	AVAILABLE TO BEGIN DEMO MAY 2012	BEGIN DEMO MAY 04, 2012*
2	H2K	CONSTRUCT NB WOSCA DETOUR GAP TO H2K STRUCTURE		BEGIN DEMO MAY 14, 2012*
3	TU	DEMO VIADUCT FROM BENT 121 TO 139		BEGIN DEMO MAY 04, 2012*
4	H2K	DEMO VIADUCT FROM BENT 148, SOUTH BY H2K. TU ALLOW ACCESS FOR DEMO.	AVAILABLE TO BEGIN DEMO MAY 2012	

* H2K STAGING AND TIMING AS REPRESENTED IN WSDOT S. HOLGATE TO S. KINGSTREET VIADUCT REPLACEMENT PROJECT SIMULATION

0 100 200
SCALE IN FEET

FILE NAME	IP_PWP:dms69910\46055-Txx-14SC002_OptM.DLV
TIME	20-OCT-2010 11:04
DATE	20-OCT-2010
PLOTTED BY	groe
DESIGNED BY	
ENTERED BY	
CHECKED BY	
PROJ. ENGR.	S. EVERETT
REGIONAL ADM.	R. PAANANEN

REVISION	DATE	BY

REGION NO.	STATE	FED.AID PROJ.NO.
10	WASH	
JOB NUMBER		
CONTRACT NO.		LOCATION NO.

RFP DESIGN
SUBMITTED BY
SEATTLE TUNNEL PARTNERS

NOT FOR CONSTRUCTION

Washington State Department of Transportation
U.S. Department of Transportation Federal Highway Administration
City of Seattle

ALASKAN WAY VIADUCT
REPLACEMENT PROJECT
SR 99 BORED TUNNEL
CONTRACT PACKAGE 14

CONSTRUCTION SEQUENCING

SC002

SHEET 14 OF 208 SHEETS

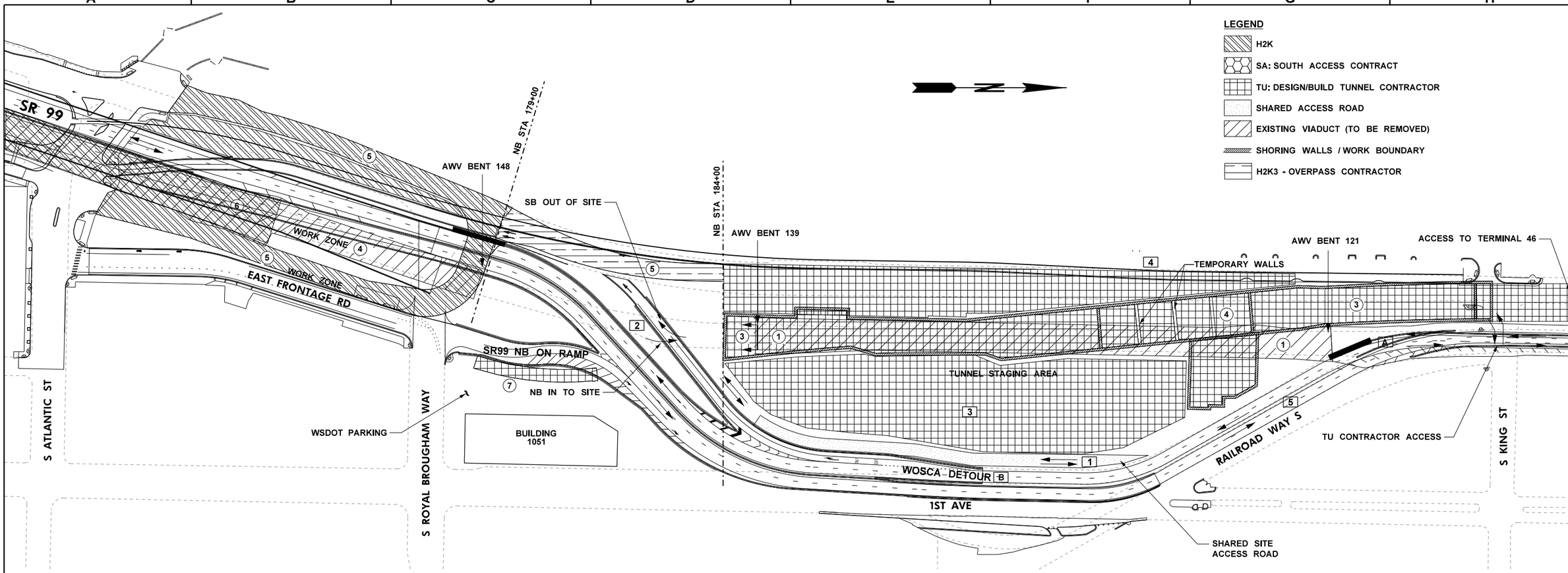

NOTES	CONTRACT		
1	TU	BUILD AND MAINTAIN SHARED ACCESS ROAD	AUGUST 2011 - MAY 2016
2	TU	INSTALL SIGNAL AND NB SITE ACCESS ROAD	COMPLETE PRIOR TO COMMENCING SHORING WALLS
3	TU	DISTRIBUTION AND COMMUNICATION DUCT BANKS.	WORK COMPLETE, INCLUDING TIE-IN PRIOR TO DEMOLITION OF BENTS 121 - 124
4	-	BNSF TAIL TRACK RUNS ALONG THE WEST PERIMETER OF THE STAGING AREA FROM ROYAL BROUGHAM TO KING STREET. SEE PLAN SHEETS.	
5	TU	RAILROAD WAY RAMPS ABOVE. STAGING PERMITTED BELOW RAMPS.	
	TU	FINAL DESIGN COORDINATION WITH SA.	JANUARY 1, 2013

TRAFFIC SHIFTS

NOTES	CONTRACT	TRAFFIC ON	
A	H2K	EXISTING VIADUCT	UNTIL MAY 4, 2012
B	H2K	WOSCA DETOUR	MAY 14, 2012 - DECEMBER 2013 (LIMITED WIDTH AT H2K2 STRUCTURE) DECEMBER 2013 - JUNE 2014 (FULL WIDTH)

* H2K STAGING AND TIMING AS REPRESENTED IN WSDOT S. HOLGATE TO S. KINGSTREET VIADUCT REPLACEMENT PROJECT SIMULATION

PHASE 1C MAY 14, 2012 - AUGUST 1, 2013

ACTIVITY IDENTIFIER	CONTRACT	ACTIVITY	TIMING	EARLY CONSTRUCTION OPTIONS
1	TU	DEMO VIADUCT FROM BENT 121-139.		MAY 2012 - JULY 2012
3	TU	CONSTRUCT SHORING WALL FOR RAMPS AND MAINLINE STRUCTURE. EXCAVATION COMPLETE. CONSTRUCTION SHORING WALLS FOR VENT BUILDING.		JUNE 2012 - MAY 2013
4	TU	ASSEMBLE AND LAUNCH TBM		MARCH 2013 - JUNE 2013
5	H2K	CONSTRUCT EAST AND WEST HALVES OF LITTLE H CROSSING STRUCTURE.	WEST HALF SEPT 2012 - FEB 2012 EAST HALF FEB 2012 - DEC 2013 NORTH LEG FEB 2013 - DEC 2013	
6	H2K	CONSTRUCT EAST HALF BRIDGE 99/540. SB 99 MAINLINE CONNECTION OPEN.	WOSCA DETOUR TIE-IN BY 12/24/2011	
7	TU	CONSTRUCT SOUTH HALF NB ON RAMP		AUGUST 2013 - MARCH 2014 (LATE CONSTRUCTION OPTION)

* H2K STAGING AND TIMING AS REPRESENTED IN WSDOT S. HOLGATE TO S. KINGSTREET VIADUCT REPLACEMENT PROJECT SIMULATION

0 100 200
SCALE IN FEET

FILE NAME	IP_PWP:dms69910\46055-Txx-14SC003_OptM.DLV					
TIME	20-OCT-2010 11:05				REGION NO. 10	STATE WASH
DATE	20-OCT-2010					FED.AID PROJ.NO.
PLOTTED BY	groe				JOB NUMBER	
DESIGNED BY						
ENTERED BY						
CHECKED BY					CONTRACT NO.	LOCATION NO.
PROJ. ENGR.	S. EVERETT					
REGIONAL ADM.	R. PAANANEN	REVISION	DATE	BY		

RFP DESIGN
SUBMITTED BY
SEATTLE TUNNEL PARTNERS

NOT FOR CONSTRUCTION

Washington State Department of Transportation
U.S. Department of Transportation Federal Highway Administration
City of Seattle

ALASKAN WAY VIADUCT
REPLACEMENT PROJECT
SR 99 BORED TUNNEL
CONTRACT PACKAGE 14

CONSTRUCTION SEQUENCING

SC003

SHEET 15 OF 208 SHEETS

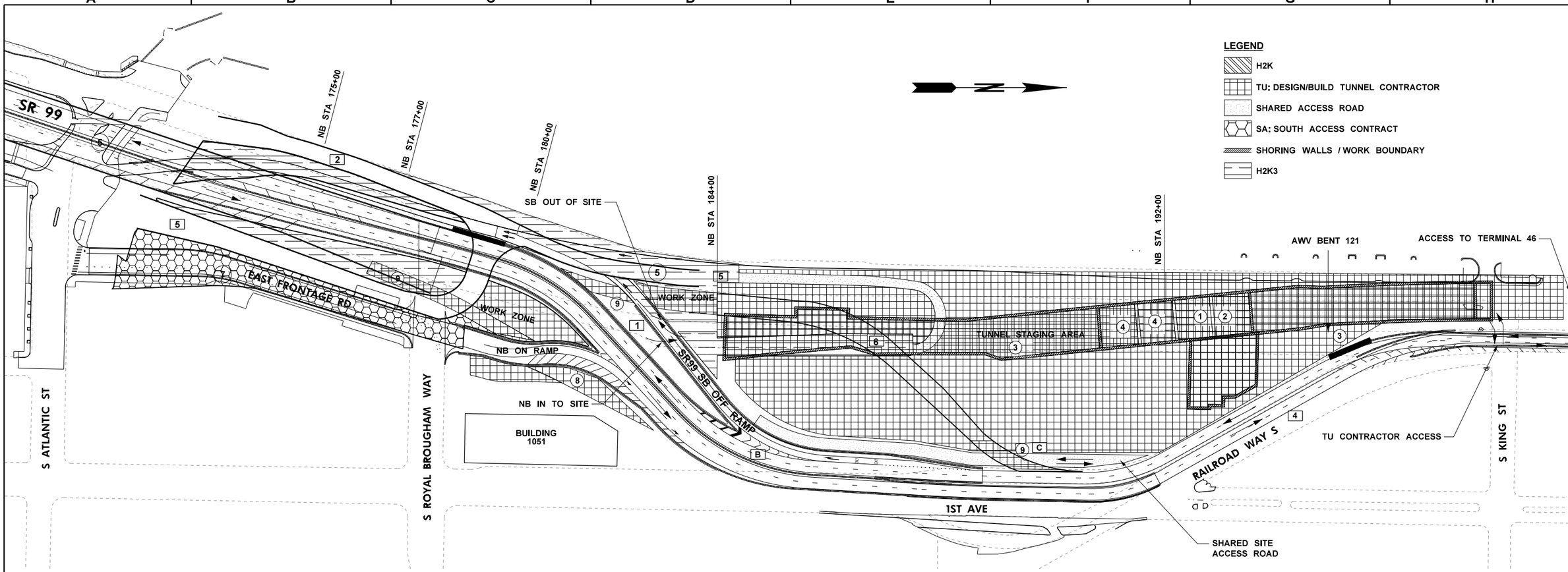

NOTES	CONTRACT		
1	TU	MAINTAIN SIGNAL AND NB SITE ACCESS ROAD	
2	H2K3	SOUTH LEGS OPEN TO PORT TRAFFIC. NORTH LEG OPEN TO H2K3.	DECEMBER 1, 2013
3		EXISTING VIADUCT IN PLACE FROM BENT 121 NORTH.	
4	TU	RAILROAD WAY RAMPS ABOVE. STAGING PERMITTED BELOW RAMPS	
5	TU	NORTHBOUND CONSTRUCTION ACCESS ROAD ELIMINATED AT ATLANTIC UPON OPENING OF H2K3 SOUTH LEGS TO PORT TRAFFIC. TU CONSTRUCTION ACCESS ROAD SHIFTED TO H2K3 NORTH LEG. SHARE ACCESS WITH SA ON' NORTH LEG.	DECEMBER 1, 2013
6	TU	SOUTH ACCESS DETOUR CONSTRUCTED OVER CUT-AND COVER (AT-GRADE)	MAY 6, 2014

TRAFFIC SHIFTS

NOTES	CONTRACT	TRAFFIC ON	
B	H2K	WOSCA DETOUR	MAY 2012 - JUNE 2014
C	SA	SOUTH ACCESS DETOUR	JUNE 2014 - NOVEMBER 2015

PHASE 2A AUGUST 1, 2013 - JUNE 3, 2014

ACTIVITY IDENTIFIER	CONTRACT	ACTIVITY	TIMING	EARLY CONSTRUCTION OPTIONS
1	TU	TUNNELING PROCESS. TBM RETRIEVAL AT NORTH PORTAL		NOVEMBER 26, 2014
2	TU	INTERNAL STRUCTURE AND SYSTEMS WORK UNDER WAY		
3	TU	CONSTRUCT CUT-AND-COVER STRUCTURE		MAY 2013 - MAY 2014
4	TU	CLOSE AND FILL TWO SOUTH BAY TO GRADE		SEPTEMBER 2013 - APRIL 2014
5	H2K3	COMPLETE NORTH LEG AND RETAINED FILL	DECEMBER 1, 2013	
6	H2K	WORK COMPLETE	DECEMBER 2, 2013	
7	SA	BEGIN SURFACE STREET RECONSTRUCTION		
8	TU	FINISH SOUTH HALF OF NBON RAMP		AUGUST 2013 - MARCH 2014 (LATE CONSTRUCTION OPTION)
9	TU	CONSTRUCT SOUTH ACCESS DETOUR		

0 100 200
SCALE IN FEET

FILE NAME	IP_PWP:dms69910\46055-Txx-14SC004_OptM.DLV
TIME	20-OCT-2010 11:05
DATE	20-OCT-2010
PLOTTED BY	gree
DESIGNED BY	
ENTERED BY	
CHECKED BY	
PROJ. ENGR.	S. EVERETT
REGIONAL ADM.	R. PAANANEN

REVISION | DATE | BY

REGION NO. 10 | STATE WASH | FED.AID PROJ.NO.
JOB NUMBER
CONTRACT NO. | LOCATION NO.

RFP DESIGN
SUBMITTED BY
SEATTLE TUNNEL PARTNERS

NOT FOR CONSTRUCTION

Washington State Department of Transportation
U.S. Department of Transportation Federal Highway Administration
City of Seattle

ALASKAN WAY VIADUCT
REPLACEMENT PROJECT
SR 99 BORED TUNNEL
CONTRACT PACKAGE 14

CONSTRUCTION SEQUENCING

SC004

SHEET 16 OF 208 SHEETS

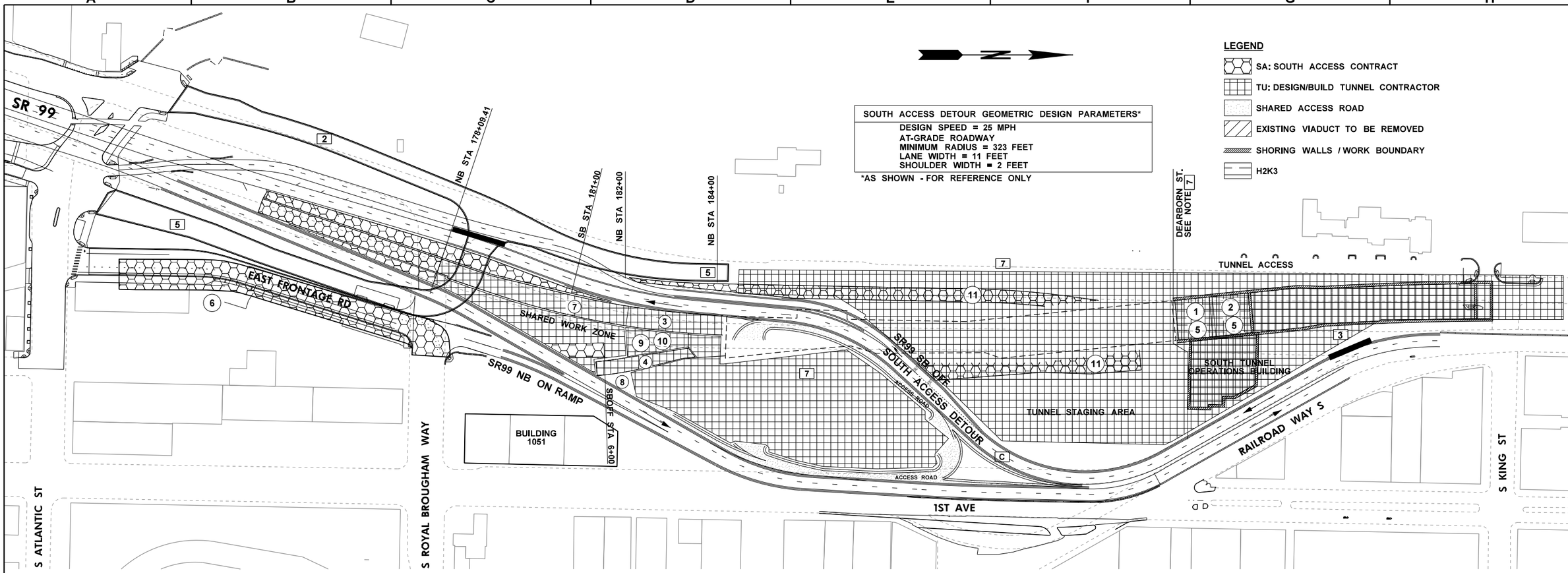

NOTES	CONTRACT		
2	H2K3	SOUTH LEGS OPEN TO PORT TRAFFIC. NORTH LEG OPEN TO H2K3.	DECEMBER 1, 2013
3		EXISTING VIADUCT IN PLACE FROM BENT 121 NORTH.	
4	TU	RAILROAD WAY RAMPS ABOVE. STAGING PERMITTED BELOW RAMPS	
5	TU	NORTHBOUND CONSTRUCTION ACCESS ROAD ELIMINATED AT ATLANTIC UPON OPENING OF H2K3 SOUTH LEGS TO PORT TRAFFIC. TU CONSTRUCTION ACCESS ROAD SHIFTED TO H2K3 NORTH LEG. SHARE ACCESS WITH SA ON' NORTH LEG.	DECEMBER 1, 2013
7	SA/TU	WOSCA STAGING AREA SOUTH OF DEARBORN RELINQUISHED TO SA, EXCEPT AREA NORTH AND WEST OF THE SR99 SB DETOUR SHALL BE SHARED ACCESS WITH SA FOR CONSTRUCTION OF SR99 SB ON RAMP AND NB OFF RAMP AND SHARED ACCESS WITH OTHERS TO PULL WIRE AND INSTALL EQUIPMENT IN THE TUNNEL OPERATIONS BUILDING AND CUT-AND-COVER STRUCTURE.	FEBRUARY 8, 2015

TRAFFIC SHIFTS

NOTES	CONTRACT	TRAFFIC ON	
C	SA	SOUTH ACCESS DETOUR	JUNE 2014 - NOVEMBER 2015

PHASE 2B JUNE 3, 2014 - APRIL 10, 2015

ACTIVITY IDENTIFIER	CONTRACT	ACTIVITY	TIMING	EARLY CONSTRUCTION OPTIONS
1	TU	COMPLETE TUNNEL INTERIOR/PREPARE FOR SYSTEMS COMMISSIONING.		
2	TU	BUILD OUT VENTILATION BUILDING. COMPLETE SYSTEMS WORK. ALLOW ACCESS TO OPERATIONS BUILDING FOR OTHERS TO PULL WIRE.		
3	TU	FINISH NB SR-99 CUT AND COVER SECTION		JANUARY 2015
4	TU	FINISH NB SR-99 ON RAMP CUT AND COVER SECTION		
5	TU	CLOSE AND FILL TWO REMAINING BAYS TO GRADE		FEBRUARY 2015 - JULY 2015
6	SA	BEGIN SURFACE STREET RECONSTRUCTION		
7	TU	CONSTRUCT AND CONNECT NB ML U-SECTION TO CUT-AND-COVER		JUNE 2014 - JULY 2015
8	TU	CONSTRUCT NB ON RAMP U-SECTION TO CUT-AND-COVER		JULY 2014 - APRIL 2015
9	SA	BEGIN NB OFF RAMP PIER AND ABUTMENT		DECEMBER 2014 - APRIL 2015
10	TU/SA	CONSTRUCT SB AND SB OFF RAMP AT GRADE		DECEMBER 2014 - APRIL 2015
11	SA	BEGIN CONSTRUCTION OF SB ON AND NB OFF RAMP SURFACE STREETS SOUTH OF DEARBORN.		FEBRUARY 2015

0 100 200
SCALE IN FEET

FILE NAME	IP_PWP:dms69910\46055-Txx-14SC005_OptM.DLV					
TIME	20-OCT-2010 11:05				REGION NO. 10	STATE WASH
DATE	20-OCT-2010					FED.AID PROJ.NO.
PLOTTED BY	groe				JOB NUMBER	
DESIGNED BY						
ENTERED BY						
CHECKED BY					CONTRACT NO.	LOCATION NO.
PROJ. ENGR.	S. EVERETT					
REGIONAL ADM.	R. PAANANEN	REVISION	DATE	BY		

RFP DESIGN
SUBMITTED BY
SEATTLE TUNNEL PARTNERS

NOT FOR CONSTRUCTION

Washington State Department of Transportation
U.S. Department of Transportation Federal Highway Administration
City of Seattle

ALASKAN WAY VIADUCT
REPLACEMENT PROJECT
SR 99 BORED TUNNEL
CONTRACT PACKAGE 14

CONSTRUCTION SEQUENCING

SC005

SHEET 17 OF 208 SHEETS

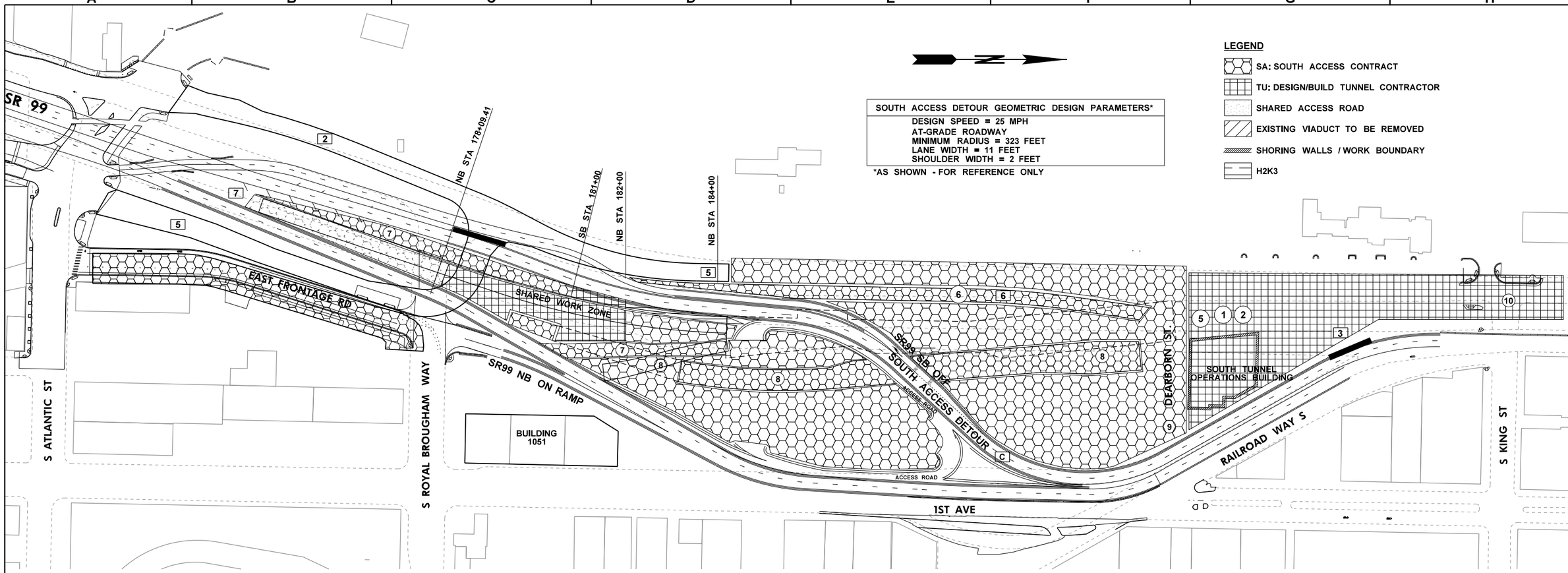

SOUTH ACCESS DETOUR GEOMETRIC DESIGN PARAMETERS*
DESIGN SPEED = 25 MPH
AT-GRADE ROADWAY
MINIMUM RADIUS = 323 FEET
LANE WIDTH = 11 FEET
SHOULDER WIDTH = 2 FEET

*AS SHOWN - FOR REFERENCE ONLY

NOTES	CONTRACT		
2	H2K3	SOUTH LEGS OPEN TO PORT TRAFFIC. NORTH LEG OPEN TO H2K3.	DECEMBER 1, 2013
3		EXISTING VIADUCT IN PLACE FROM BENT 121 NORTH.	
4	TU	RAILROAD WAY RAMPS ABOVE. STAGING PERMITTED BELOW RAMPS	
5	TU	NORTHBOUND CONSTRUCTION ACCESS ROAD ELIMINATED AT ATLANTIC UPON OPENING OF H2K3 SOUTH LEGS TO PORT TRAFFIC. TU CONSTRUCTION ACCESS ROAD SHIFTED TO H2K3 NORTH LEG. SHARE ACCESS WITH SA ON' NORTH LEG.	DECEMBER 1, 2013
6	SA	RELINQUISH REMAINDER OF WOSCA STAGING AREA	MAY 1, 2015
7	SA	TURN OVER REMAINDER OF SURFACE WORK AREA TO SA TO TIE ROADWAY TO TUNNEL	NOVEMBER 1, 2015

TRAFFIC SHIFTS

NOTES	CONTRACT	TRAFFIC ON	
C	SA	SOUTH ACCESS DETOUR	JUNE 2014 - NOVEMBER 2015

PHASE 2C APRIL 10, 2015 - NOVEMBER 1, 2015

(WORK IN ADJACENT PHASES 3 AND 4A HAVE BEEN MOVED INTO EARLIER PHASES)

ACTIVITY IDENTIFIER	CONTRACT	ACTIVITY	TIMING	EARLY CONSTRUCTION OPTIONS
1	TU	COMPLETE TUNNEL INTERIOR STRUCTURE		OCTOBER 2015
2	TU	COMPLETE VENTILATION BUILDING, SYSTEMS WORK, AND COMMISSIONING.		NOVEMBER 2015
5	TU	FINISH FILLING BAYS TO GRADE		JULY 2015
6	SA	CONSTRUCT SB ON AT-GRADE		JULY 2015
7	TU/SA	CONSTRUCT AND CONNECT SB ML AND SB OFF AT-GRADE TO CUT-AND-COVER. TIE TUNNEL ROADWAY TO H2K2 EMBANKMENT		APRIL 2015 - AUGUST 2015
8	SA	CONSTRUCT NB OFF RAMP AND BRIDGE DECK		APRIL 2015 - JULY 2015
9	SA	SURFACE IMPROVEMENTS TO SOUTH SIDE OF DEARBORN ST.		FEBRUARY 2015
10	SA	SURFACE IMPROVEMENTS TO KING ST. AND REMAINING DEARBORN, NB OFF AND SB ON RAMPS		JULY 2015

0 100 200
SCALE IN FEET

FILE NAME	IP_PWP:dms69910\46055-Txx-14SC006_OptM.DLV					
TIME	20-OCT-2010 11:06				REGION NO. 10	STATE WASH
DATE	20-OCT-2010					FED.AID PROJ.NO.
PLOTTED BY	groe				JOB NUMBER	
DESIGNED BY						
ENTERED BY						
CHECKED BY					CONTRACT NO.	LOCATION NO.
PROJ. ENGR.	S. EVERETT					
REGIONAL ADM.	R. PAANANEN	REVISION	DATE	BY		

RFP DESIGN
SUBMITTED BY
SEATTLE TUNNEL PARTNERS

NOT FOR CONSTRUCTION

Washington State Department of Transportation
U.S. Department of Transportation Federal Highway Administration
City of Seattle

ALASKAN WAY VIADUCT
REPLACEMENT PROJECT
SR 99 BORED TUNNEL
CONTRACT PACKAGE 14

CONSTRUCTION SEQUENCING

SC006

SHEET 18 OF 208 SHEETS

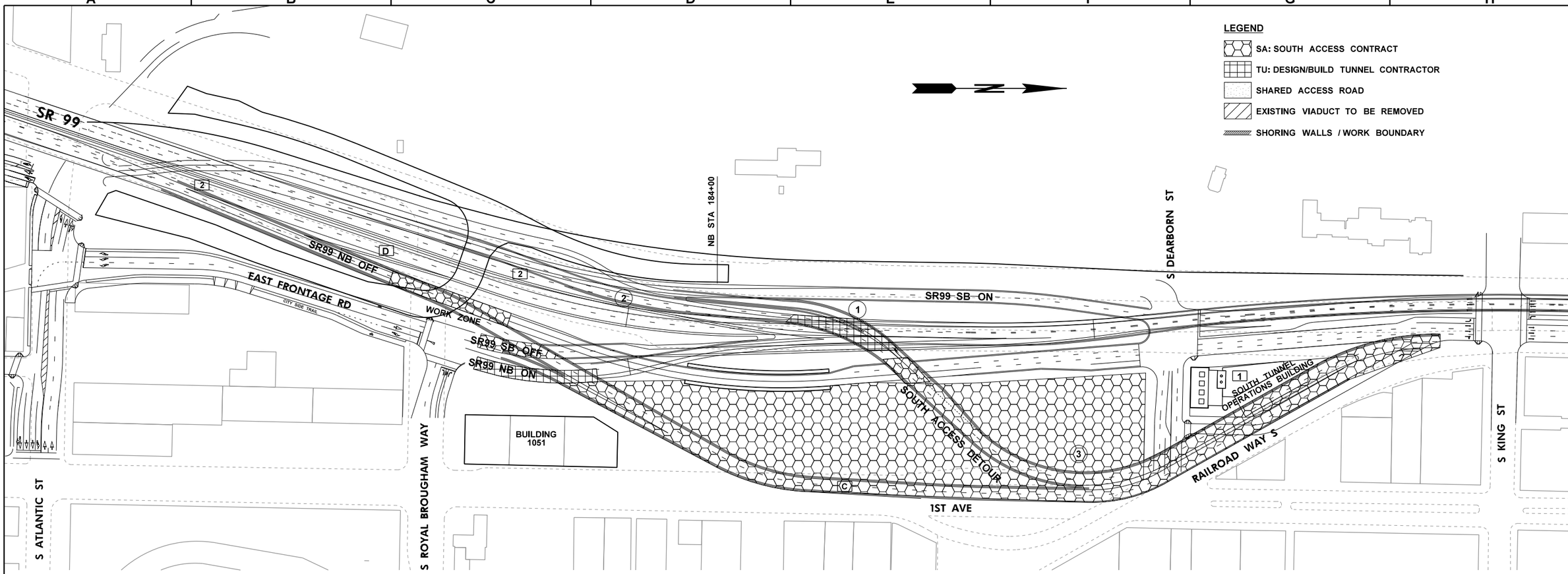

NOTE	CONTRACT		
1	TU	TU RESTORE SITE AT COMPLETION OF WORK. COORDINATE WITH SA AT INTERFACE.	PREVIOUSLY COMPLETED
2	SA	COMPLETE MAINLINE TIE-INS, SIGN AND STRIPE	

TRAFFIC SHIFTS

NOTES	CONTRACT	TRAFFIC ON	
C	SA	SOUTH ACCESS DETOUR	JUNE 2014 - OCTOBER 20, 2015
D	SA	SR-99 TUNNEL	NOVEMBER 1, 2015

TRAFFIC CLOSURES

ROADWAY MOVEMENT	DURATION
SR-99 NORTHBOUND AND SR-99 SOUTHBOUND	10 DAY CLOSURE

PHASE 4B NOVEMBER 1, 2015 - NOVEMBER 10, 2015

(WORK IN ADJACENT PHASES 3 AND 4A HAVE BEEN MOVED INTO EARLIER PHASES)

ACTIVITY IDENTIFIER	CONTRACT	ACTIVITY	TIMING	EARLY CONSTRUCTION OPTIONS
1	TU	REMOVE SOUTH ACCESS DETOUR FROM SR-99 MAIN LINE.		
2	TU	CONTRUCT REMAINING SB SR-99 AT-GRADE ROADWAY		
3	SA	SURFACE IMPROVEMENTS CONTRACTOR WORKING WITHIN WORK ZONE:		
		A. REMOVE SOUTH ACCESS DETOUR. B. REBUILD FIRST AVENUE. C. DEMOLISH RAILROAD WAY RAMPS AND ALASKAN WAY VIADUCT FROM BENT 121 TO BENT 112. D. CONVERT RAILROAD AVENUE TO PEDESTRIAN PATH. E. CONSTRUCT VENTILATION BUILDING PARKING STRUCTURE.		

0 100 200
SCALE IN FEET

FILE NAME	IP_PWP:dms69910\46055-Txx-14SC007_OptM.DLV					
TIME	20-OCT-2010 11:06				REGION NO. 10	STATE WASH
DATE	20-OCT-2010					FED.AID PROJ.NO.
PLOTTED BY	gree				JOB NUMBER	
DESIGNED BY						
ENTERED BY						
CHECKED BY					CONTRACT NO.	LOCATION NO.
PROJ. ENGR.	S. EVERETT					
REGIONAL ADM.	R. PAANANEN	REVISION	DATE	BY		

RFP DESIGN
SUBMITTED BY
SEATTLE TUNNEL PARTNERS

NOT FOR CONSTRUCTION

Washington State Department of Transportation
U.S. Department of Transportation Federal Highway Administration
City of Seattle

ALASKAN WAY VIADUCT
REPLACEMENT PROJECT
SR 99 BORED TUNNEL
CONTRACT PACKAGE 14

CONSTRUCTION SEQUENCING

SC007

SHEET 19 OF 208 SHEETS

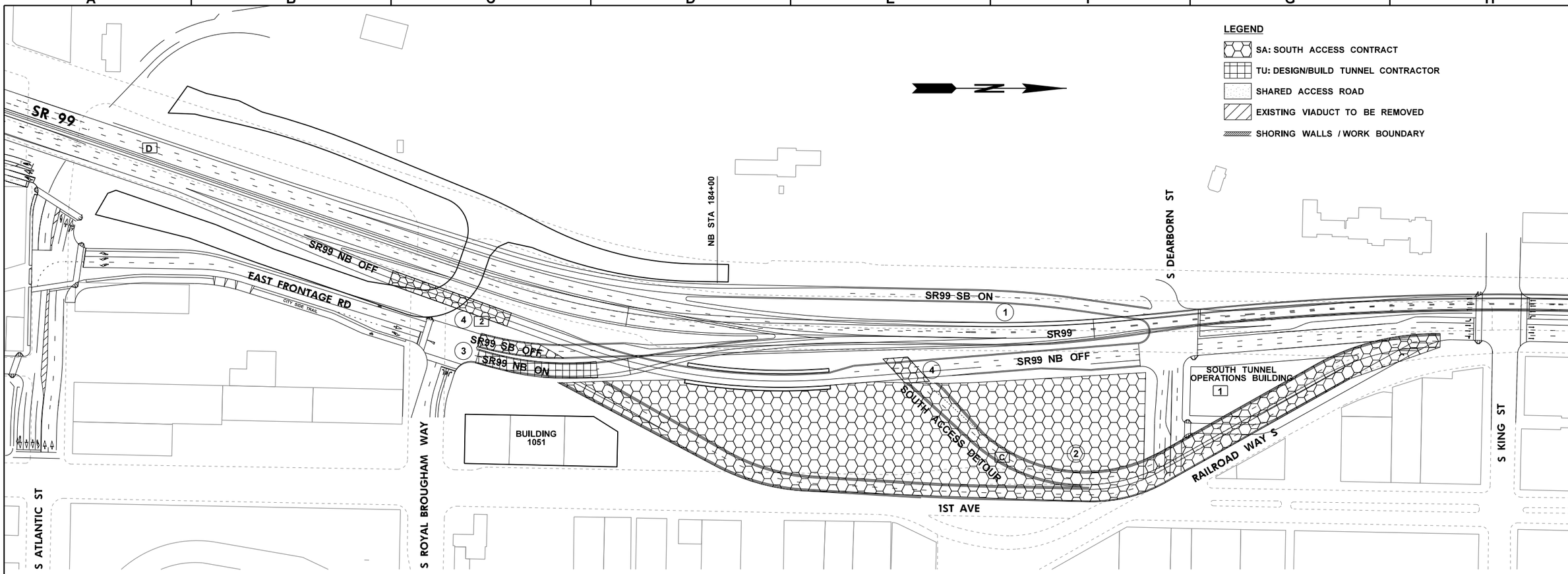

NOTE	CONTRACT		
1	TU	TU RESTORE SITE AT COMPLETION OF WORK. COORDINATE WITH SA AT INTERFACE.	PREVIOUSLY COMPLETED
2	SA	OPENING OF SR-99 NB OFF	DECEMBER 15, 2015

TRAFFIC SHIFTS

NOTES	CONTRACT	TRAFFIC ON	
D	SA	SR-99 TUNNEL	NOVEMBER 2016

TRAFFIC CLOSURES

ROADWAY MOVEMENTS	DURATION
SR-99 SOUTHBOUND OFF RAMP AND SR-99 NORTHBOUND ON RAMP	10 DAYS

PHASE 5A NOVEMBER 10, 2015 - DECEMBER 15, 2015

ACTIVITY IDENTIFIER	CONTRACT	ACTIVITY	TIMING	EARLY CONSTRUCTION OPTIONS
1		SR-99 MAIN LINE OPERATIONAL.		
2	SA	SURFACE IMPROVEMENTS CONTRACTOR WORKING WITHIN WORK ZONE:		
		A. REMOVE SOUTH ACCESS DETOUR.		
		B. REBUILD FIRST AVENUE.		
		C. DEMOLISH RAILROAD WAY RAMPS AND ALASKAN WAY VIADUCT FROM BENT 121 TO BENT 112.		
		D. CONVERT RAILROAD AVENUE TO PEDESTRIAN PATH.		
		E. CONSTRUCT VENTILATION BUILDING PARKING STRUCTURE.		
3	SA/TU	CONSTRUCT EXCAVATE NB ON AND SB OFF RAMP		NOVEMBER 2015 - DECEMBER 2015
4	SA	CONSTRUCT NB OFF		NOVEMBER 2015 - DECEMBER 2015

0 100 200
SCALE IN FEET

FILE NAME	IP_PWP:dms69910\46055-Txx-14SC008_OptM.DLV					
TIME	20-OCT-2010 11:06				REGION NO. 10	STATE WASH
DATE	20-OCT-2010					FED.AID PROJ.NO.
PLOTTED BY	gree				JOB NUMBER	
DESIGNED BY						
ENTERED BY						
CHECKED BY					CONTRACT NO.	LOCATION NO.
PROJ. ENGR.	S. EVERETT					
REGIONAL ADM.	R. PAANANEN	REVISION	DATE	BY		

RFP DESIGN
SUBMITTED BY
SEATTLE TUNNEL PARTNERS

NOT FOR CONSTRUCTION

Washington State Department of Transportation
U.S. Department of Transportation Federal Highway Administration
City of Seattle

ALASKAN WAY VIADUCT REPLACEMENT PROJECT
SR 99 BORED TUNNEL
CONTRACT PACKAGE 14

CONSTRUCTION SEQUENCING

SC008

SHEET 20 OF 208 SHEETS

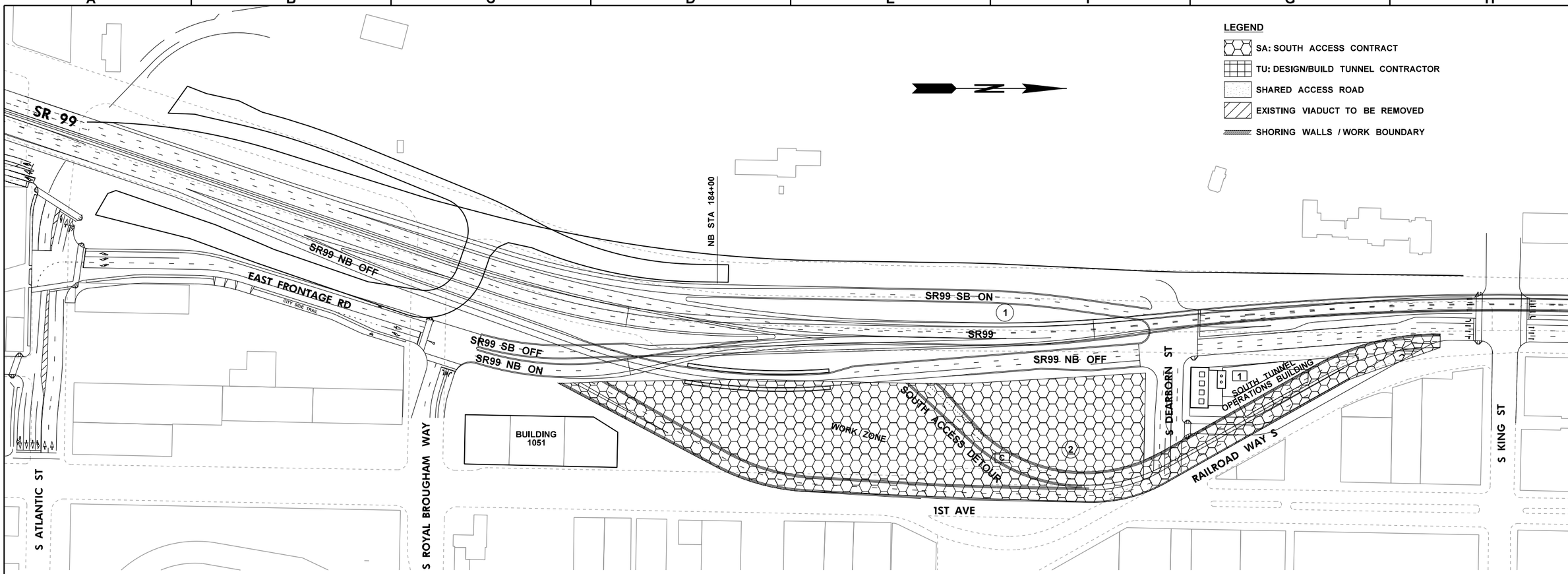

PHASE 5B DECEMBER 15, 2015 - DECEMBER 31, 2016

NOTE	CONTRACT		
1	TU	TU RESTORE SITE AT COMPLETION OF WORK. COORDINATE WITH SA AT INTERFACE.	PREVIOUSLY COMPLETED

ACTIVITY IDENTIFIER	CONTRACT	ACTIVITY	TIMING	EARLY CONSTRUCTION OPTIONS
1		SR-99 FULLY OPERATIONAL.		
2	SA	SURFACE IMPROVEMENTS CONTRACTOR WORKING WITHIN WORK ZONE:		
		A. REMOVE SOUTH ACCESS DETOUR.		
		B. REBUILD FIRST AVENUE.		
		C. DEMOLISH RAILROAD WAY RAMPS AND ALASKAN WAY VIADUCT FROM BENT 121 TO BENT 112.		
		D. CONVERT RAILROAD AVENUE TO PEDESTRIAN PATH.		
		E. CONSTRUCT VENTILATION BUILDING PARKING STRUCTURE.		

TRAFFIC SHIFTS

NOTES	CONTRACT	TRAFFIC ON	
D	SA	SR-99 TUNNEL	NOVEMBER 2015

0 100 200
SCALE IN FEET

FILE NAME	IP_PWP:dms69910\46055-Txx-14SC009_OptM.DLV					
TIME	20-OCT-2010 11:07					
DATE	20-OCT-2010					
PLOTTED BY	groe					
DESIGNED BY						
ENTERED BY						
CHECKED BY						
PROJ. ENGR.	S. EVERETT					
REGIONAL ADM.	R. PAANANEN	REVISION	DATE	BY		

REGION NO.	STATE	FED.AID PROJ.NO.
10	WASH	
JOB NUMBER		
CONTRACT NO.		LOCATION NO.

RFP DESIGN
SUBMITTED BY
SEATTLE TUNNEL PARTNERS

NOT FOR CONSTRUCTION

Washington State Department of Transportation
U.S. Department of Transportation Federal Highway Administration
City of Seattle

ALASKAN WAY VIADUCT
REPLACEMENT PROJECT
SR 99 BORED TUNNEL
CONTRACT PACKAGE 14

CONSTRUCTION SEQUENCING

SC009

SHEET 21 OF 208 SHEETS

CURVE DATA					
P.I. STATION	DELTA	RADIUS	TANGENT	LENGTH	S
S-SB99 183+05.07	17°25'21" LT	3000.00	459.67	912.24	4%
S-NB99 181+74.77	17°25'21" LT	1609.00	246.53	489.26	5%
S-NBON 2+28.48	31°28'44" LT	620.00	174.73	340.63	5.5%
S-NBON 5+29.63	9°31'12" RT	965.00	80.35	160.34	6%
S-NBON 7+60.45	5°45'15" RT	3000.00	150.77	301.28	3%

CURVE DATA					
P.I. STATION	DELTA	RADIUS	TANGENT	LENGTH	S
S-NBOFF 14+26.76	2°46'20" LT	3019.00	73.05	146.07	3%
S-NBOFF 21+08.71	24°11'27" LT	1200.00	257.16	506.65	5%
S-SBON 13+72.85	16°16'36" LT	1662.00	237.67	472.14	4%
S-SBOFF 4+35.61	18°34'29" LT	600.00	98.12	194.51	6%

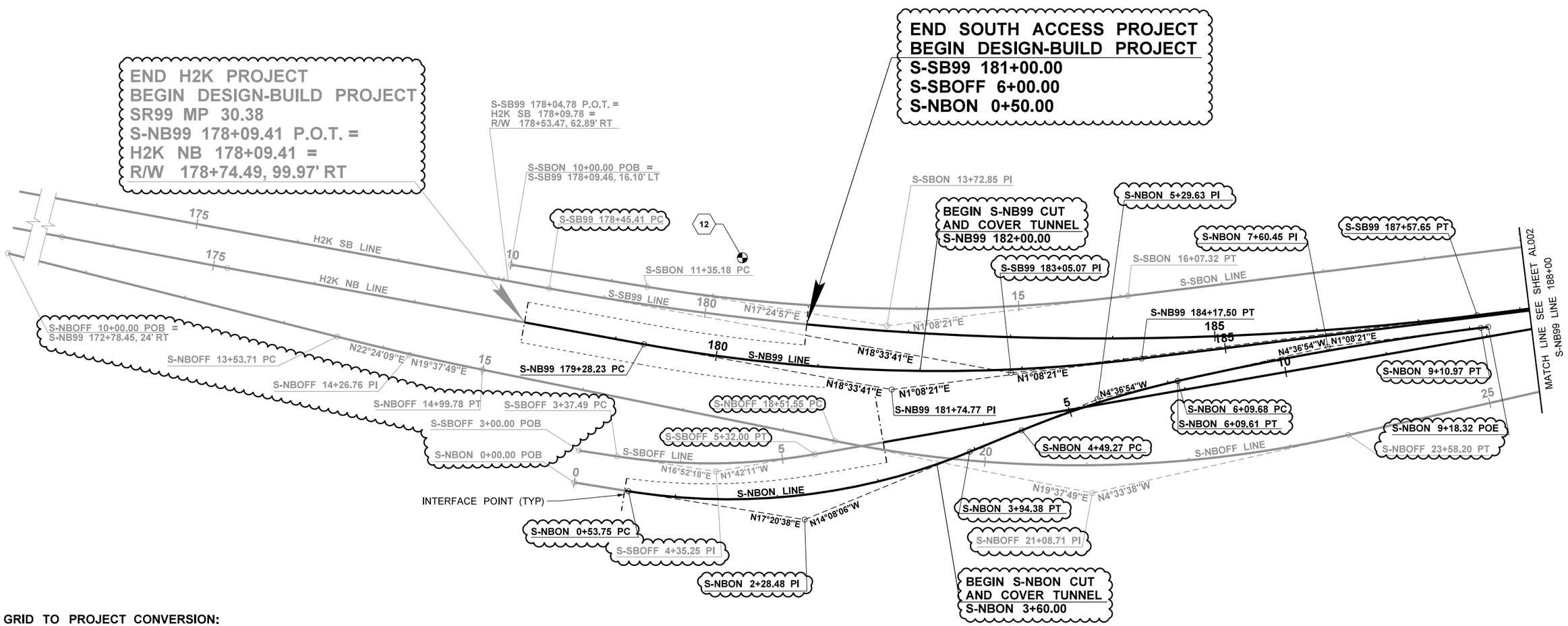

GRID TO PROJECT CONVERSION:

THE COORDINATES SHOWN ARE WASHINGTON STATE PLANE NORTH ZONE GRID COORDINATES. TO OBTAIN PROJECT DATUM COORDINATES, MULTIPLY THESE COORDINATES BY THE COMBINED SCALE FACTOR OF 1.00001222751. THEN SUBTRACT 100,000 FROM THE NORTHING VALUES AND 700,000 FROM THE EASTING VALUES.

DATUMS:
HORIZONTAL: NAD83/91 WA STATE PLANE, NORTH ZONE
VERTICAL: NAVD88

CONTROL POINT DATA							
POINT NO.	GRID NORTHING	GRID EASTING	PROJECT NORTHING	PROJECT EASTING	NAVD88 ELEVATION	PLAN REFERENCE	ALIGNMENT STATION
12	219945.222	1269624.383	119947.911	569639.907	16.075	AL001	S-NB99 180+12.96, 98.45' LT
17	221800.622	1269728.096	121803.335	569743.622	14.801	AL002	BT99 199+99.63, 2.72' RT

0 50 100
SCALE IN FEET

NOTES:
1. SHADED AREAS INDICATE WORK OUTSIDE OF THE DESIGN-BUILD PROJECT LIMITS AND IS SHOWN FOR REFERENCE ONLY.
2. CLOUDED AREAS INDICATE CHANGES MADE TO THE RFP.

FILE NAME	IP_PWP:dms69910\46055-Txx-14AL001_OptM.DLV				
TIME	20-OCT-2010 11:07				
DATE	20-OCT-2010				
PLOTTED BY	groe				
DESIGNED BY	G. SCHWANTES				
ENTERED BY	G. ROE				
CHECKED BY	S. RINNERT				
PROJ. ENGR.	S. EVERETT				
REGIONAL ADM.	R. PAANANEN	REVISION	DATE	BY	

REGION NO.	STATE	FED.AID PROJ.NO.
10	WASH	
JOB NUMBER		
CONTRACT NO.		LOCATION NO.

STEPHEN P. RINNERT STATE OF WASHINGTON 33682 REGISTERED PROFESSIONAL ENGINEER

RFP DESIGN
SUBMITTED BY
SEATTLE TUNNEL PARTNERS

NOT FOR CONSTRUCTION

Washington State Department of Transportation
U.S. Department of Transportation Federal Highway Administration
City of Seattle

ALASKAN WAY VIADUCT
REPLACEMENT PROJECT
SR 99 BORED TUNNEL
CONTRACT PACKAGE 14

ALIGNMENT PLAN

AL001

SHEET 22 OF 208 SHEETS

CURVE DATA					
P.I. STATION	DELTA	RADIUS	TANGENT	LENGTH	S
S-SBON 21+88.95	6°55'08" RT	1600.00	96.72	193.21	7%
S-SB99 190+63.84	6°55'48" LT	2730.25	165.31	330.22	4%
S-SB99 194+06.13	1°00'26" RT	5996.35	52.71	105.42	2%

CURVE DATA					
P.I. STATION	DELTA	RADIUS	TANGENT	LENGTH	S
S-NB99 190+54.93	6°55'48" LT	2732.00	165.42	330.44	4%
S-NB99 193+97.31	1°00'26" RT	5994.60	52.70	105.39	2%
BT99 198+56.52	5°54'31" RT	6000.00	309.65	618.75	2%

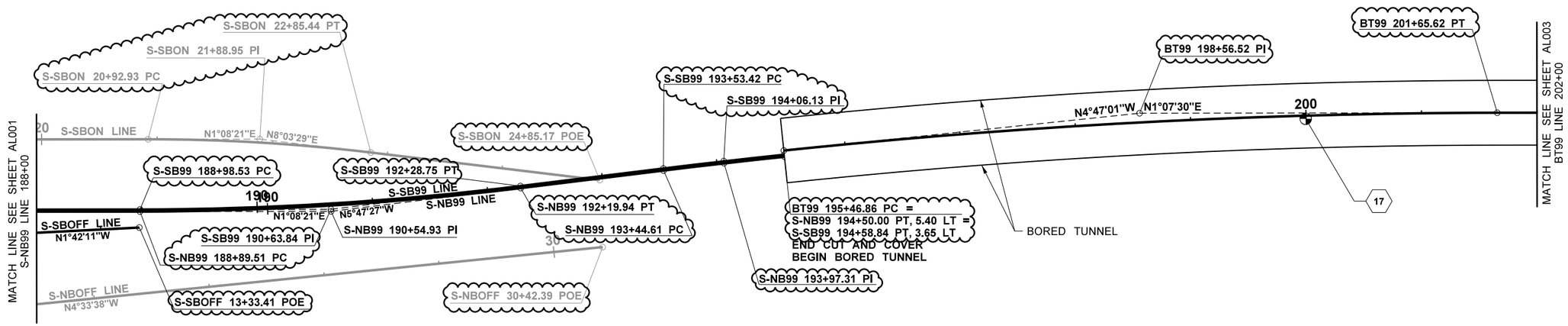

NOTES:

1. SHADED AREAS INDICATE WORK OUTSIDE OF THE DESIGN-BUILD PROJECT LIMITS AND IS SHOWN FOR REFERENCE ONLY.
2. CLOUDED AREAS INDICATE CHANGES MADE TO THE RFP.

FILE NAME	IP_PWP:dms69910\46055-Txx-14AL002_OptM.DLV					
TIME	20-OCT-2010 11:07					
DATE	20-OCT-2010					
PLOTTED BY	groe					
DESIGNED BY	G. SCHWANTES					
ENTERED BY	G. ROE					
CHECKED BY	S. RINNERT					
PROJ. ENGR.	S. EVERETT					
REGIONAL ADM.	R. PAANANEN	REVISION	DATE	BY		

REGION NO.	STATE	FED.AID PROJ.NO.
10	WASH	
JOB NUMBER		
CONTRACT NO.		LOCATION NO.

STEPHEN P. RINNERT — STATE OF WASHINGTON — 33682 — REGISTERED PROFESSIONAL ENGINEER

RFP DESIGN

SUBMITTED BY
SEATTLE TUNNEL PARTNERS

NOT FOR CONSTRUCTION

Washington State Department of Transportation

U.S. Department of Transportation
Federal Highway Administration

City of Seattle

ALASKAN WAY VIADUCT
REPLACEMENT PROJECT
SR 99 BORED TUNNEL
CONTRACT PACKAGE 14

ALIGNMENT PLAN

AL002

SHEET 23 OF 208 SHEETS

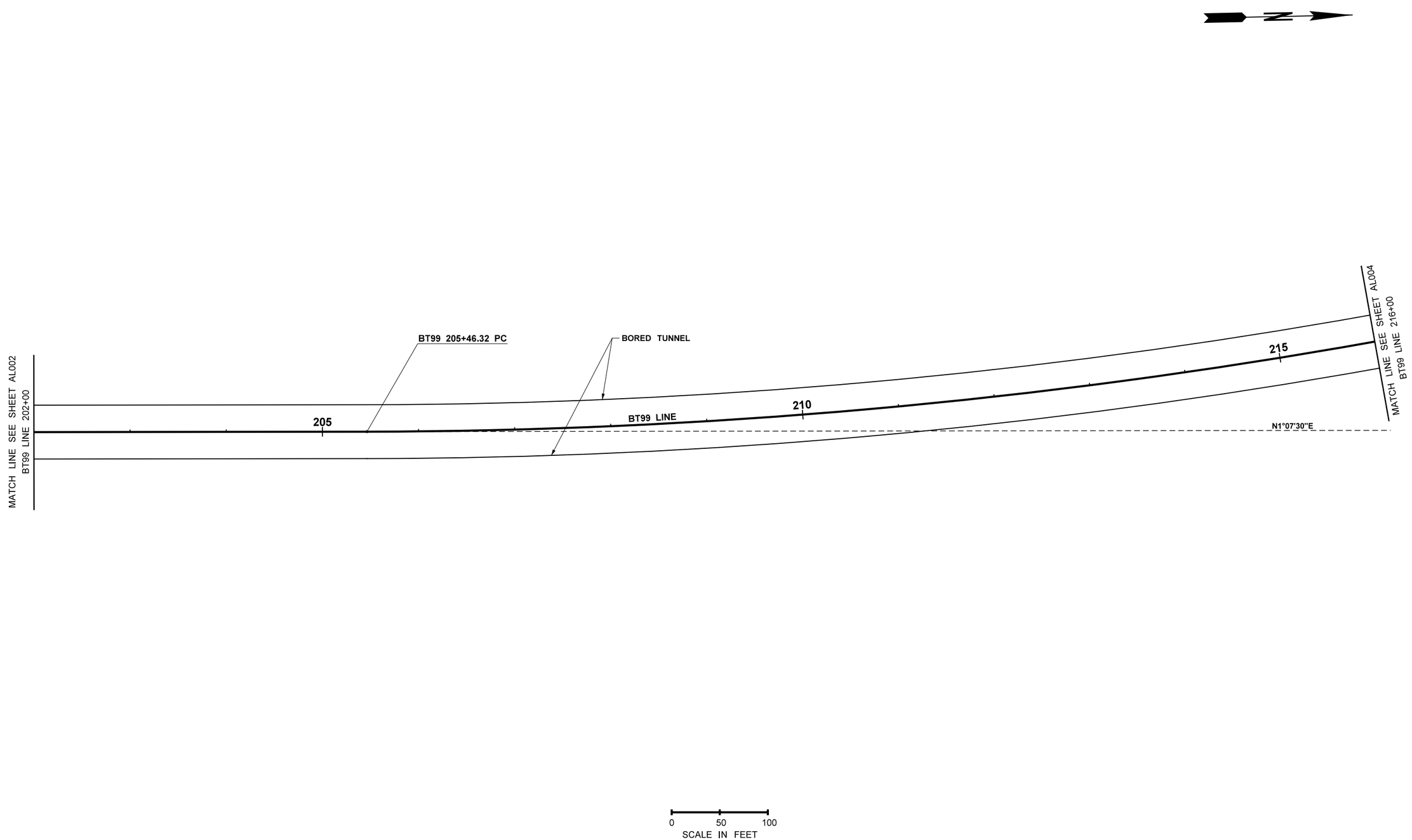

FILE NAME	IP_PWP:dms69910\46055-Txx-14AL003_OptM.DLV						
TIME	20-OCT-2010 11:07				REGION NO. 10	STATE WASH	FED.AID PROJ.NO.
DATE	20-OCT-2010						
PLOTTED BY	groe				JOB NUMBER		
DESIGNED BY	L. XU						
ENTERED BY	G. ROE						
CHECKED BY	S. RINNERT				CONTRACT NO.		LOCATION NO.
PROJ. ENGR.	S. EVERETT						
REGIONAL ADM.	R. PAANANEN	REVISION	DATE	BY			

STEPHEN P. RINNERT — STATE OF WASHINGTON — 33682 — REGISTERED PROFESSIONAL ENGINEER

RFP DESIGN
SUBMITTED BY
SEATTLE TUNNEL PARTNERS

NOT FOR CONSTRUCTION

Washington State Department of Transportation
U.S. Department of Transportation Federal Highway Administration
City of Seattle

ALASKAN WAY VIADUCT
REPLACEMENT PROJECT
SR 99 BORED TUNNEL
CONTRACT PACKAGE 14

ALIGNMENT PLAN

AL003

SHEET 24 OF 208 SHEETS

CURVE DATA					
P.I. STATION	DELTA	RADIUS	TANGENT	LENGTH	S
BT99 222+52.85	31°45'14" LT	6000.00'	1706.53'	3325.25'	2%

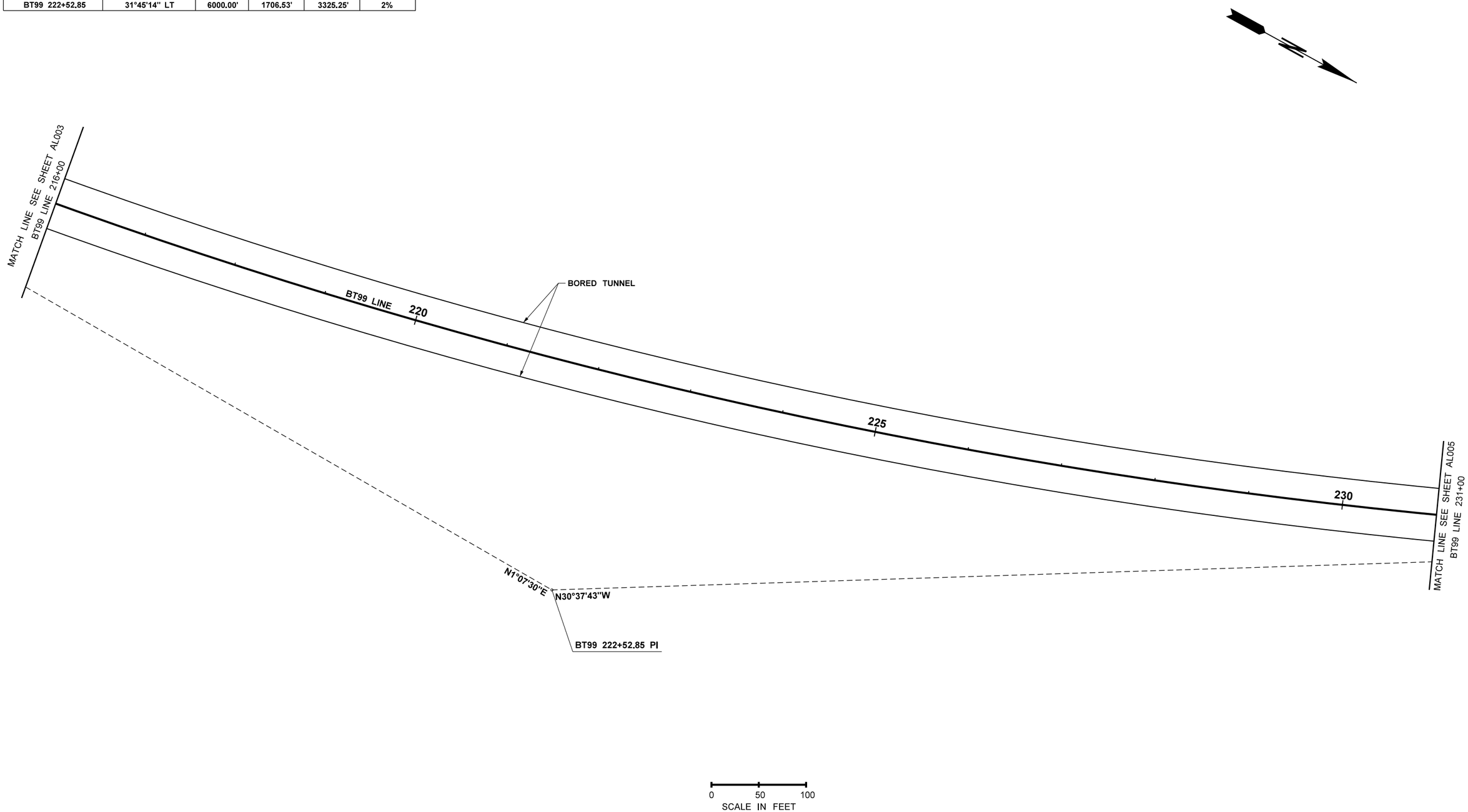

FILE NAME	IP_PWP:dms69910\46055-Txx-14AL004_OptM.DLV
TIME	20-OCT-2010 11:08
DATE	20-OCT-2010
PLOTTED BY	groe
DESIGNED BY	L. XU
ENTERED BY	G. ROE
CHECKED BY	S. RINNERT
PROJ. ENGR.	S. EVERETT
REGIONAL ADM.	R. PAANANEN

REVISION	DATE	BY

REGION NO.	STATE	FED.AID PROJ.NO.
10	WASH	
JOB NUMBER		
CONTRACT NO.		LOCATION NO.

STEPHEN P. RINNERT — STATE OF WASHINGTON — 33682 — REGISTERED PROFESSIONAL ENGINEER

RFP DESIGN
SUBMITTED BY
SEATTLE TUNNEL PARTNERS

NOT FOR CONSTRUCTION

Washington State Department of Transportation
U.S. Department of Transportation Federal Highway Administration
City of Seattle

ALASKAN WAY VIADUCT REPLACEMENT PROJECT
SR 99 BORED TUNNEL
CONTRACT PACKAGE 14

ALIGNMENT PLAN

AL004

SHEET 25 OF 208 SHEETS

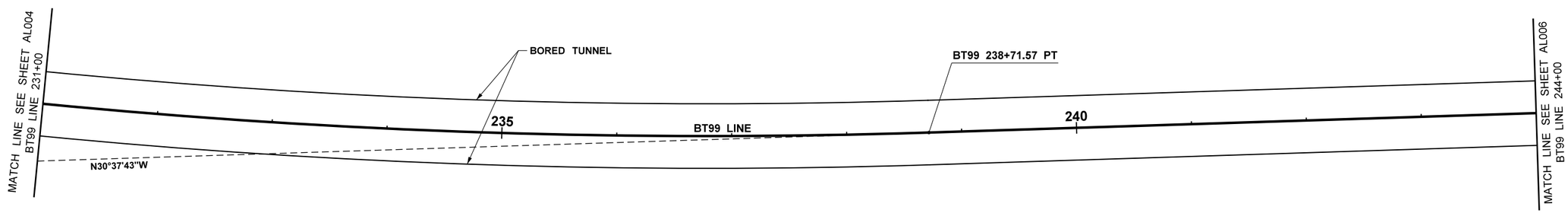

0 50 100
SCALE IN FEET

FILE NAME	IP_PWP:dms69910\46055-Txx-14AL005_OptM.DLV						
TIME	20-OCT-2010 11:08				REGION NO. 10	STATE WASH	FED.AID PROJ.NO.
DATE	20-OCT-2010						
PLOTTED BY	groe				JOB NUMBER		
DESIGNED BY	L. XU						
ENTERED BY	G. ROE						
CHECKED BY	S. RINNERT				CONTRACT NO.		LOCATION NO.
PROJ. ENGR.	S. EVERETT						
REGIONAL ADM.	R. PAANANEN	REVISION	DATE	BY			

STEPHEN P. RINNERT
STATE OF WASHINGTON
35685
REGISTERED PROFESSIONAL ENGINEER

RFP DESIGN
SUBMITTED BY
SEATTLE TUNNEL PARTNERS

NOT FOR CONSTRUCTION

Washington State Department of Transportation
U.S. Department of Transportation Federal Highway Administration
City of Seattle

ALASKAN WAY VIADUCT
REPLACEMENT PROJECT
SR 99 BORED TUNNEL
CONTRACT PACKAGE 14

ALIGNMENT PLAN

AL005

SHEET 26 OF 208 SHEETS

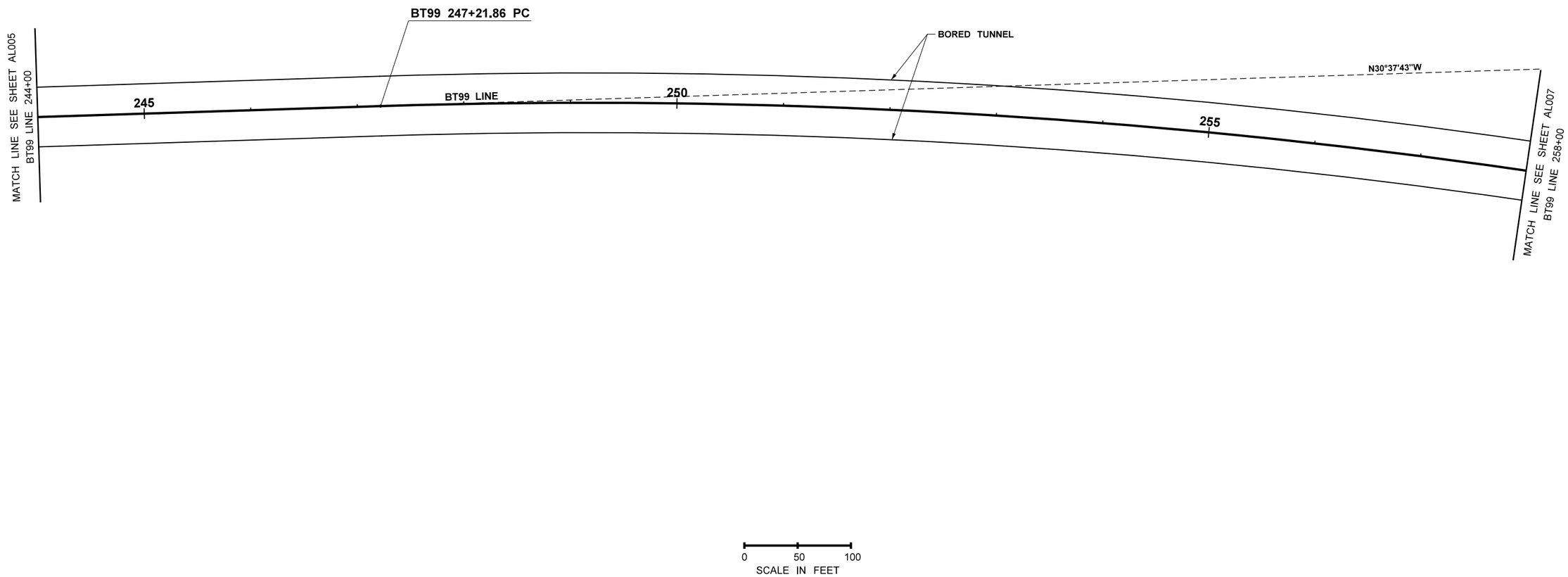

FILE NAME	IP_PWP:dms69910\46055-Txx-14AL006_OptM.DLV				REGION NO.	STATE	FED.AID PROJ.NO.
TIME	20-OCT-2010 11:08				10	WASH	
DATE	20-OCT-2010				JOB NUMBER		
PLOTTED BY	groe						
DESIGNED BY	L. XU						
ENTERED BY	G. ROE				CONTRACT NO.		LOCATION NO.
CHECKED BY	S. RINNERT						
PROJ. ENGR.	S. EVERETT						
REGIONAL ADM.	R. PAANANEN	REVISION	DATE	BY			

STEPHEN P. RINNERT
STATE OF WASHINGTON
33682
REGISTERED
PROFESSIONAL ENGINEER

RFP DESIGN
SUBMITTED BY
SEATTLE TUNNEL PARTNERS

NOT FOR CONSTRUCTION

Washington State Department of Transportation
U.S. Department of Transportation Federal Highway Administration
City of Seattle

ALASKAN WAY VIADUCT
REPLACEMENT PROJECT
SR 99 BORED TUNNEL
CONTRACT PACKAGE 14

ALIGNMENT PLAN

AL006

SHEET 27 OF 208 SHEETS

CURVE DATA					
P.I. STATION	DELTA	RADIUS	TANGENT	LENGTH	S
BT99 268+51.29	38°24'39" RT	6113.00'	2129.43'	4098.14'	2%

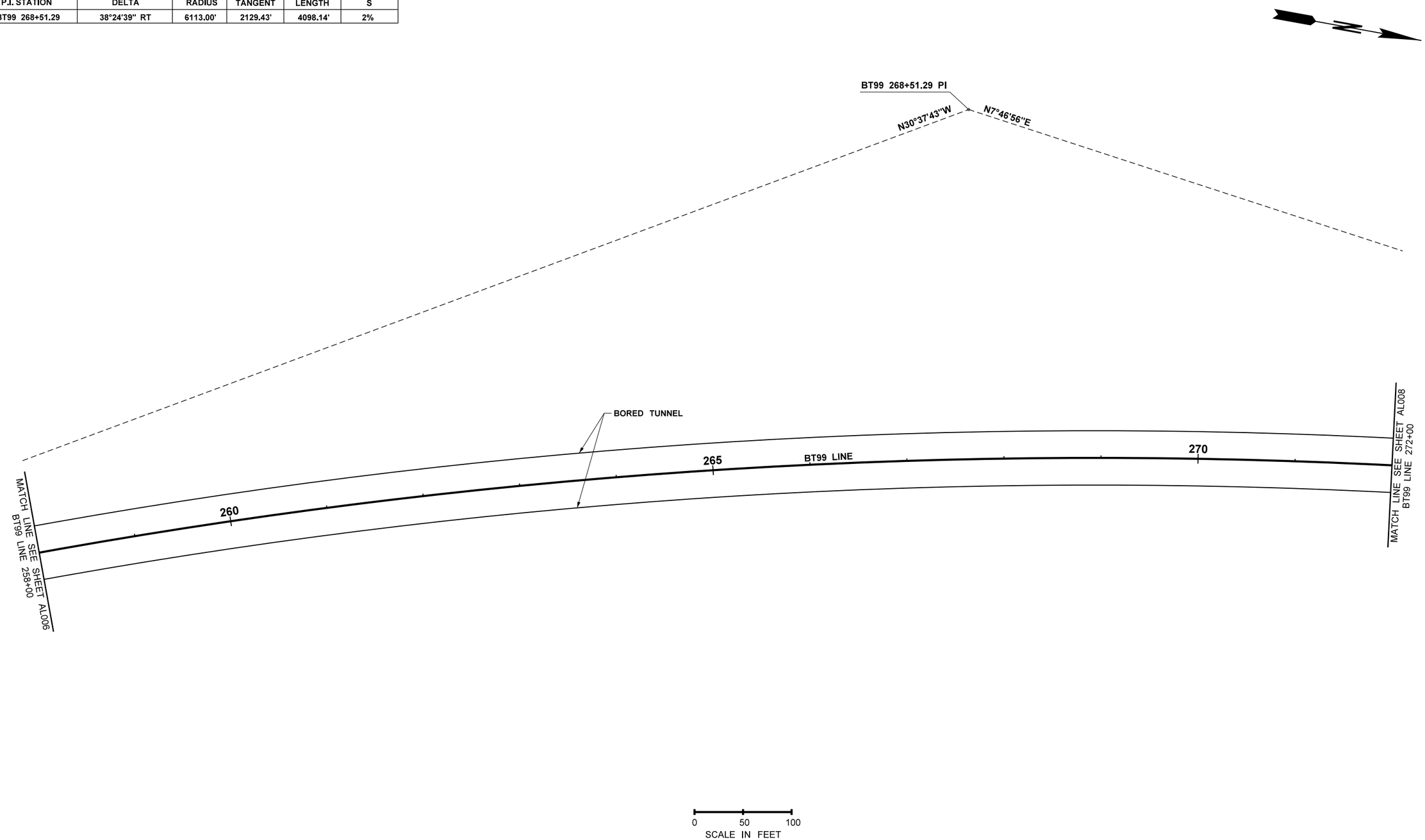

FILE NAME	IP_PWP:dms69910\46055-Txx-14AL007_OptM.DLV						
TIME	20-OCT-2010 11:08				REGION NO. 10	STATE WASH	FED.AID PROJ.NO.
DATE	20-OCT-2010						
PLOTTED BY	groe				JOB NUMBER		
DESIGNED BY	L. XU						
ENTERED BY	G. ROE						
CHECKED BY	S. RINNERT				CONTRACT NO.		LOCATION NO.
PROJ. ENGR.	S. EVERETT						
REGIONAL ADM.	R. PAANANEN	REVISION	DATE	BY			

STEPHEN P. RINNERT — STATE OF WASHINGTON — 35682 — REGISTERED PROFESSIONAL ENGINEER

RFP DESIGN

SUBMITTED BY
SEATTLE TUNNEL PARTNERS

NOT FOR CONSTRUCTION

Washington State Department of Transportation

U.S. Department of Transportation
Federal Highway Administration

City of Seattle

ALASKAN WAY VIADUCT
REPLACEMENT PROJECT
SR 99 BORED TUNNEL
CONTRACT PACKAGE 14

ALIGNMENT PLAN

AL007

SHEET 28 OF 208 SHEETS

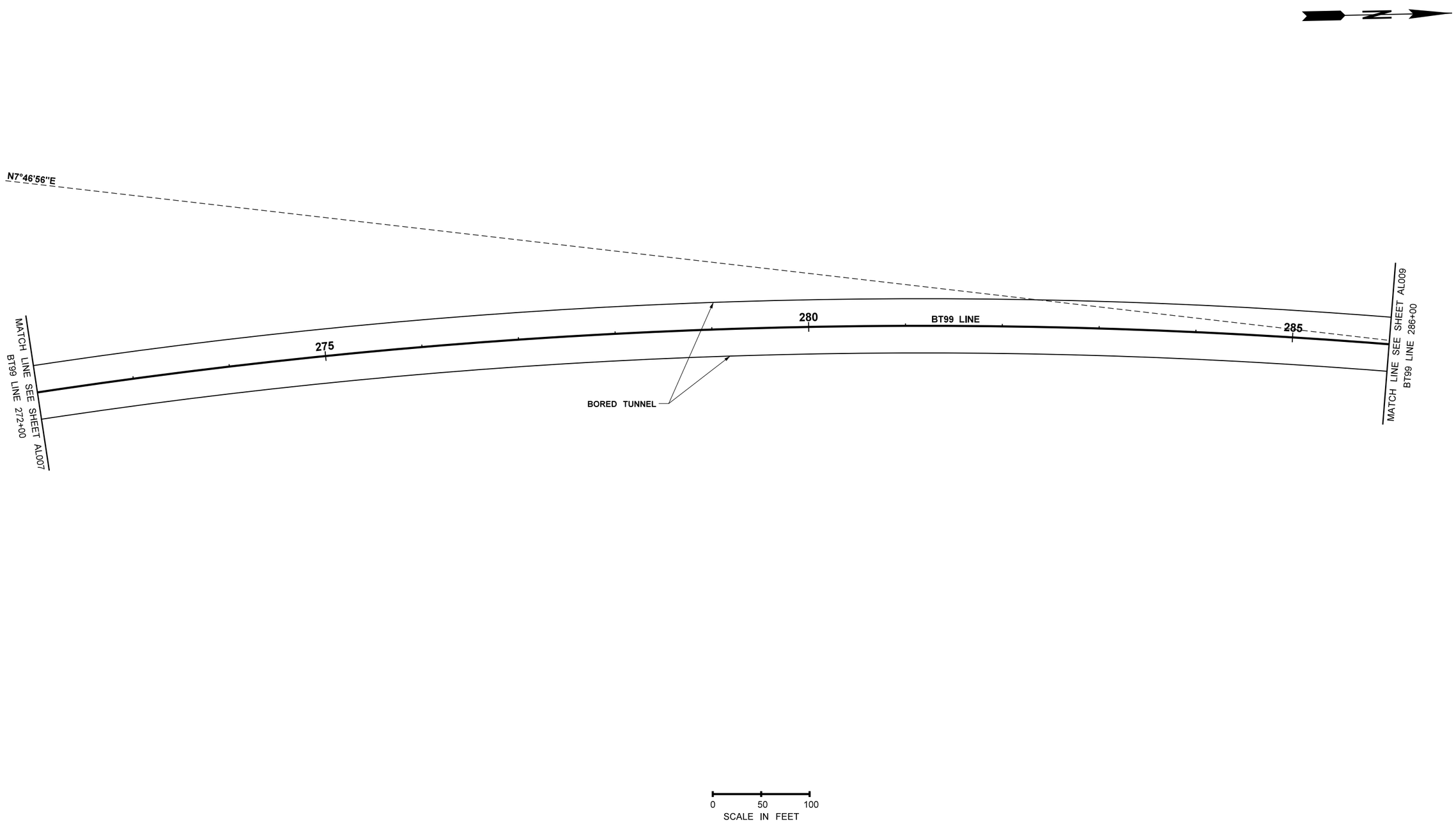

FILE NAME	IP_PWP:dms69910\46055-Txx-14AL008_OptM.DLV						
TIME	20-OCT-2010 11:09				REGION NO. 10	STATE WASH	FED.AID PROJ.NO.
DATE	20-OCT-2010						
PLOTTED BY	groe				JOB NUMBER		
DESIGNED BY	L. XU						
ENTERED BY	G. ROE						
CHECKED BY	S. RINNERT				CONTRACT NO.		LOCATION NO.
PROJ. ENGR.	S. EVERETT						
REGIONAL ADM.	R. PAANANEN	REVISION	DATE	BY			

STEPHEN P. RINNERT
STATE OF WASHINGTON
33682
REGISTERED PROFESSIONAL ENGINEER

RFP DESIGN
SUBMITTED BY
SEATTLE TUNNEL PARTNERS

NOT FOR CONSTRUCTION

Washington State Department of Transportation
U.S. Department of Transportation Federal Highway Administration
City of Seattle

ALASKAN WAY VIADUCT
REPLACEMENT PROJECT
SR 99 BORED TUNNEL
CONTRACT PACKAGE 14

ALIGNMENT PLAN

AL008

SHEET 29 OF 208 SHEETS

CURVE DATA

P.I. STATION	DELTA	RADIUS	TANGENT	LENGTH	S
A 300+04.00	23°14'33" LT	530.00'	109.00'	215.00'	-2%
A 303+06.07	41°43'41" RT	357.00'	136.07'	260.00'	-5%
A 306+58.28	18°29'32" LT	1402.30'	228.28'	452.59'	2%
N-NB99 300+40.40	00°46'18" RT	6000.00'	40.40'	80.80'	7%
N-NB99 302+69.28	18°00'00" RT	1190.00'	188.48'	373.85'	7%
N-NB99 309+30.29	24°41'59" LT	1190.00'	260.55'	513.00'	-5%
N-NB99 312+56.26	03°28'49" LT	2420.00'	73.52'	147.00'	-2%
N-SB99 301+63.61	03°07'26" RT	6000.00'	163.61	327.13	2%
N-SB99 304+71.12	06°03'37" RT	2720.00'	143.98'	287.70	4%

CURVE DATA

P.I. STATION	DELTA	RADIUS	TANGENT	LENGTH	S
N-SB99 312+07.44	15°31'44" LT	1728.00'	235.61'	468.34'	-2%
N-SBON 306+52.63	09°50'46" LT	611.00'	52.63'	105.00'	-3%
N-SBON 307+47.28	45°50'12" LT	100.00'	42.28'	80.00'	2%
6TH AVE 310+89.70	42°19'50" RT	335.00'	129.70'	247.50'	2%
6TH AVE 313+82.92	42°19'36" LT	333.00'	128.92'	246.00'	-2%
N-NBOFF 306+37.67	09°12'11" LT	965.00'	77.67'	155.00'	2%
N-NBOFF 308+97.32	81°33'44" RT	85.00'	73.32'	121.00'	6%
N-NBOFF 310+30.08	11°13'14" LT	357.14'	35.08'	69.94'	-2%

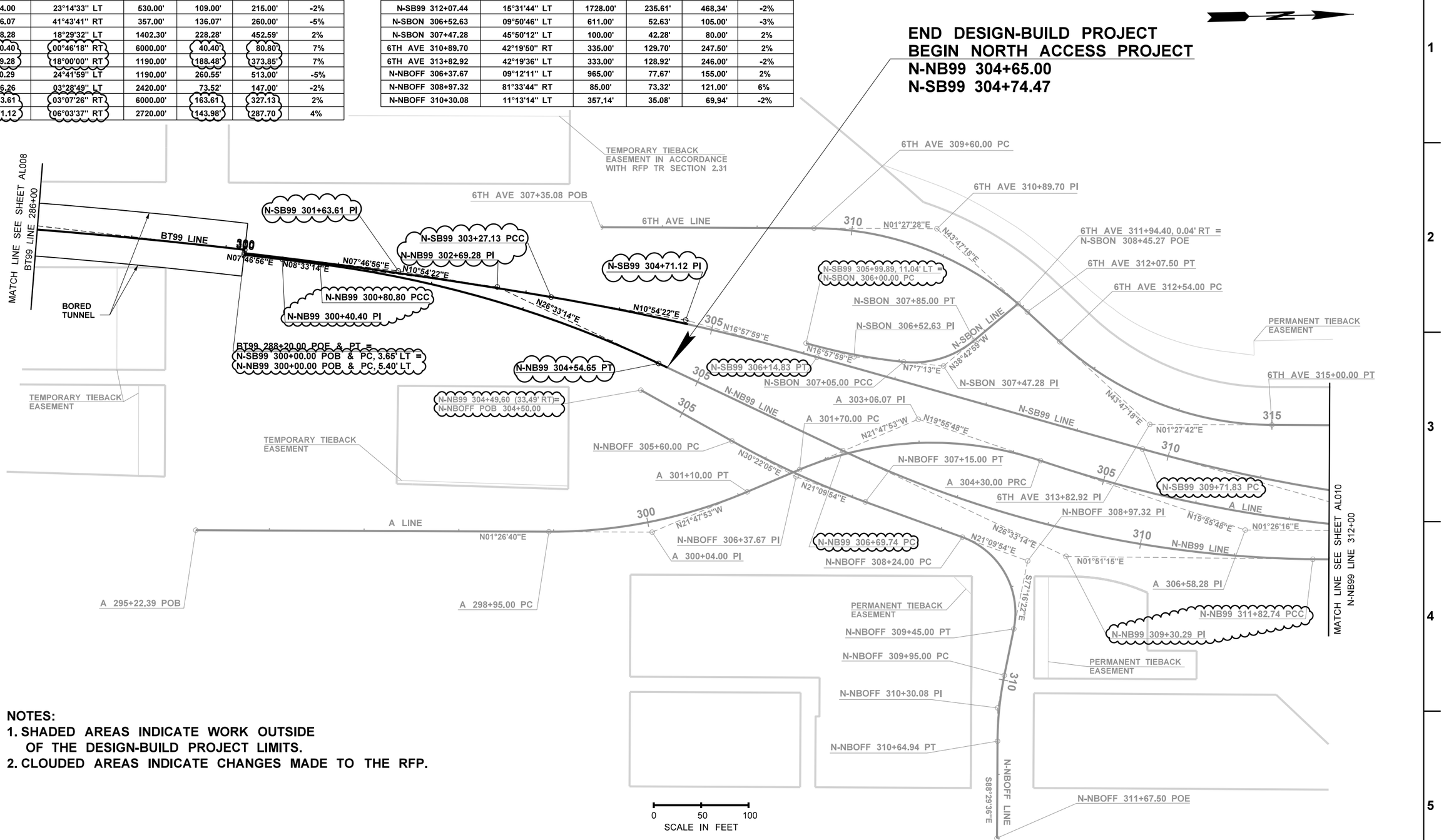

NOTES:

1. SHADED AREAS INDICATE WORK OUTSIDE OF THE DESIGN-BUILD PROJECT LIMITS.
2. CLOUDED AREAS INDICATE CHANGES MADE TO THE RFP.

FILE NAME	IP_PWP:dms69910\46055-Txx-14AL009_OptM.DLV				REGION NO.	STATE	FED.AID PROJ.NO.
TIME	20-OCT-2010 11:09				10	WASH	
DATE	20-OCT-2010				JOB NUMBER		
PLOTTED BY	groe						
DESIGNED BY	L. XU				CONTRACT NO.		LOCATION NO.
ENTERED BY	G. ROE						
CHECKED BY	S. RINNERT						
PROJ. ENGR.	S. EVERETT						
REGIONAL ADM.	R. PAANANEN	REVISION	DATE	BY			

STEPHEN P. RINNERT — STATE OF WASHINGTON — 33682 — REGISTERED PROFESSIONAL ENGINEER

RFP DESIGN
SUBMITTED BY
SEATTLE TUNNEL PARTNERS

NOT FOR CONSTRUCTION

Washington State Department of Transportation
U.S. Department of Transportation Federal Highway Administration
City of Seattle

ALASKAN WAY VIADUCT REPLACEMENT PROJECT
SR 99 BORED TUNNEL
CONTRACT PACKAGE 14

ALIGNMENT PLAN

AL009

SHEET 30 OF 208 SHEETS

CURVE DATA					
P.I. STATION	DELTA	RADIUS	TANGENT	LENGTH	S
N-NB99 314+24.87	03°03'51" RT	3557.00'	95.13'	190.22'	-2%

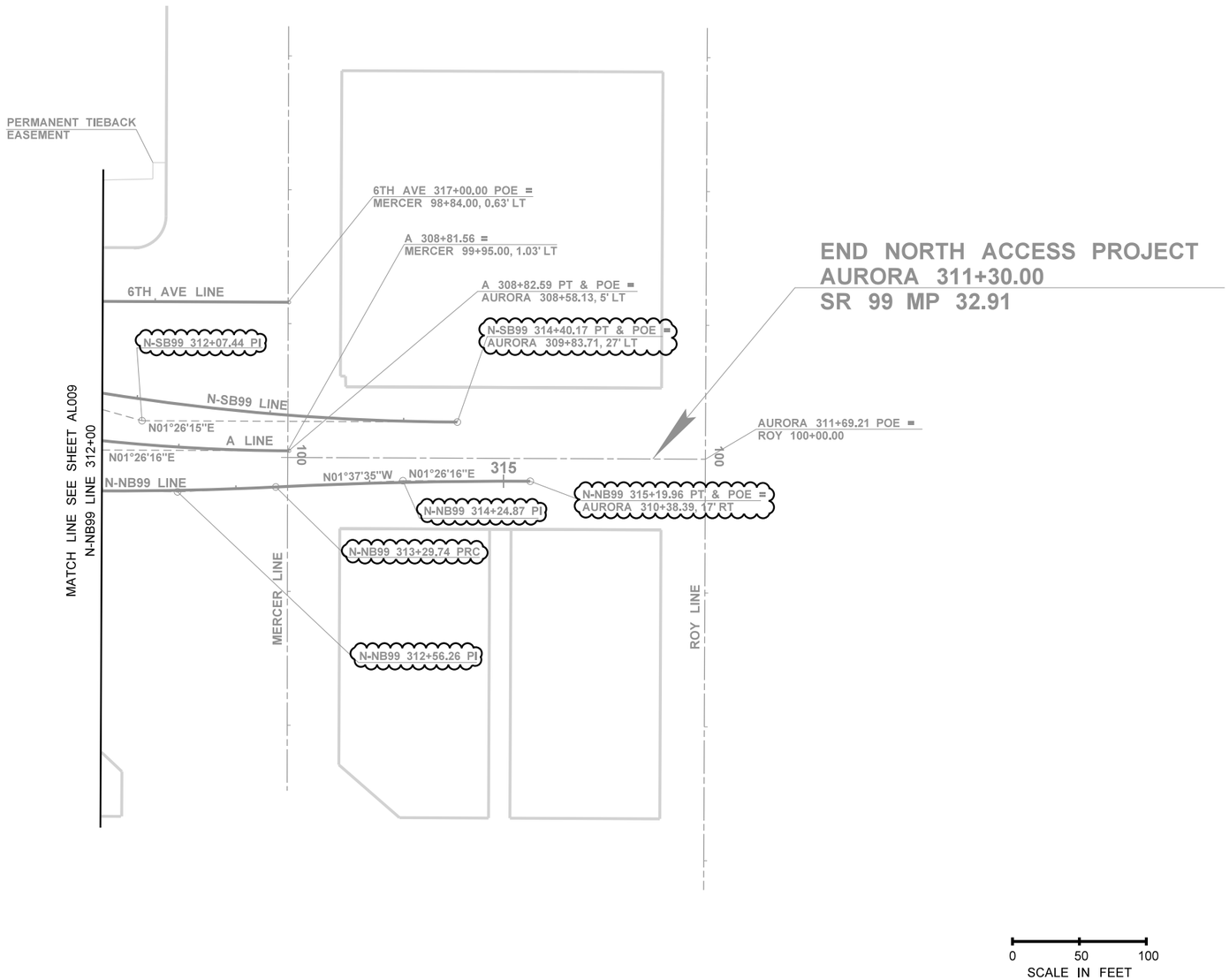

NOTES:
1. SHADED AREAS INDICATE WORK OUTSIDE OF THE DESIGN-BUILD PROJECT LIMITS.
2. CLOUDED AREAS INDICATE CHANGES MADE TO THE RFP.

FILE NAME	IP_PWP:dms69910\46055-Txx-14AL010_OptM.DLV					
TIME	20-OCT-2010 11:09					
DATE	20-OCT-2010					
PLOTTED BY	groe					
DESIGNED BY	L. XU					
ENTERED BY	G. ROE					
CHECKED BY	S. RINNERT					
PROJ. ENGR.	S. EVERETT					
REGIONAL ADM.	R. PAANANEN	REVISION	DATE	BY		

REGION NO.	STATE	FED.AID PROJ.NO.
10	WASH	
JOB NUMBER		
CONTRACT NO.		LOCATION NO.

STEPHEN P. RINNERT STATE OF WASHINGTON 33682 REGISTERED PROFESSIONAL ENGINEER

RFP DESIGN
SUBMITTED BY
SEATTLE TUNNEL PARTNERS

NOT FOR CONSTRUCTION

Washington State Department of Transportation
U.S. Department of Transportation Federal Highway Administration
City of Seattle

ALASKAN WAY VIADUCT
REPLACEMENT PROJECT
SR 99 BORED TUNNEL
CONTRACT PACKAGE 14

ALIGNMENT PLAN

AL010

SHEET 31 OF 208 SHEETS

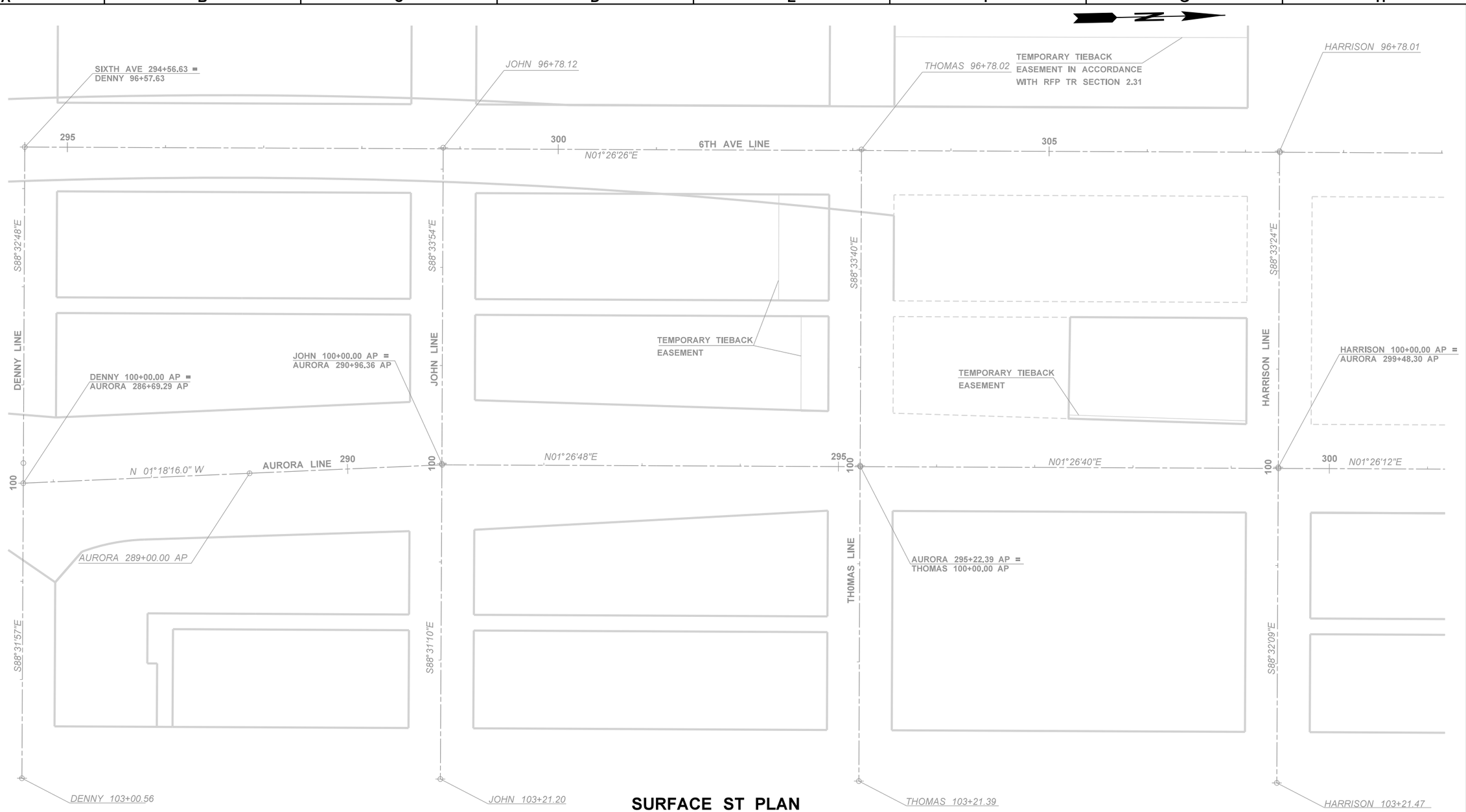

SURFACE ST PLAN

0 50 100
SCALE IN FEET

NOTE:
SHADED AREAS INDICATE WORK OUTSIDE OF THE DESIGN-BUILD PROJECT LIMITS AND IS FOR REFERENCE ONLY.

FILE NAME	IP_PWP:dms69910\46055-Txx-14AL011_OptM.DLV				REGION NO.	STATE	FED.AID PROJ.NO.
TIME	20-OCT-2010 11:09				10	WASH	
DATE	20-OCT-2010				JOB NUMBER		
PLOTTED BY	groe						
DESIGNED BY	L. XU						
ENTERED BY	G. ROE				CONTRACT NO.		LOCATION NO.
CHECKED BY	S. RINNERT						
PROJ. ENGR.	S. EVERETT						
REGIONAL ADM.	R. PAANANEN	REVISION	DATE	BY			

STEPHEN P. RINNERT
STATE OF WASHINGTON
35682
REGISTERED PROFESSIONAL ENGINEER

RFP DESIGN
SUBMITTED BY
SEATTLE TUNNEL PARTNERS

NOT FOR CONSTRUCTION

Washington State Department of Transportation
U.S. Department of Transportation Federal Highway Administration
City of Seattle

ALASKAN WAY VIADUCT
REPLACEMENT PROJECT
SR 99 BORED TUNNEL
CONTRACT PACKAGE 14

ALIGNMENT PLAN

AL011

SHEET 32 OF 208 SHEETS

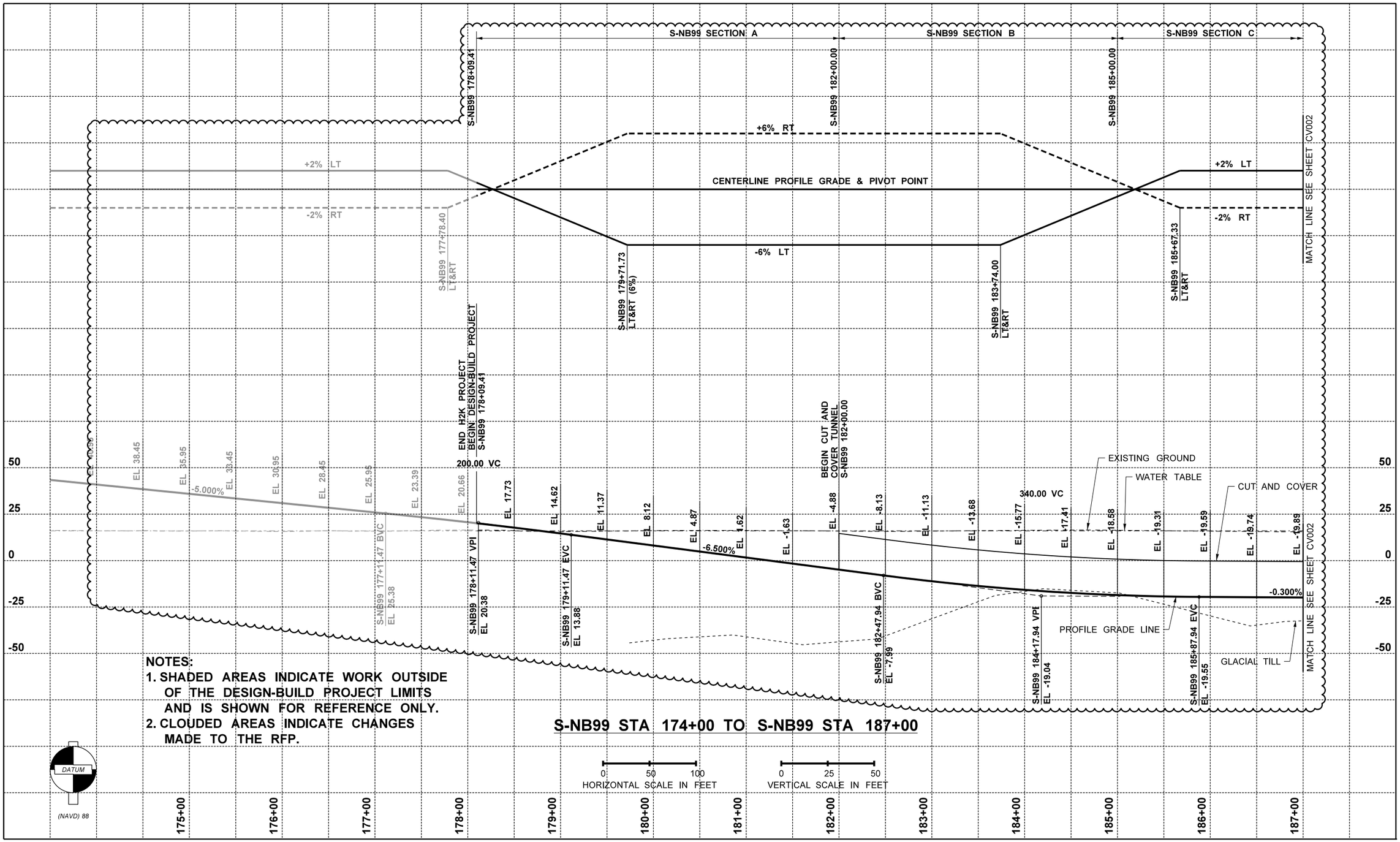

FILE NAME	IP_PWP:dms69910\46055-Txx-14CV001_OptM.DLV						
TIME	20-OCT-2010 11:10				REGION NO. 10	STATE WASH	FED.AID PROJ.NO.
DATE	20-OCT-2010				JOB NUMBER		
PLOTTED BY	groe						
DESIGNED BY	G. SCHWANTES				CONTRACT NO.		LOCATION NO.
ENTERED BY	G. ROE						
CHECKED BY	S. RINNERT						
PROJ. ENGR.	S. EVERETT						
REGIONAL ADM.	R. PAANANEN	REVISION	DATE	BY			

STEPHEN P. RINNERT — STATE OF WASHINGTON — 35682 — REGISTERED PROFESSIONAL ENGINEER

RFP DESIGN

SUBMITTED BY
SEATTLE TUNNEL PARTNERS

NOT FOR CONSTRUCTION

Washington State Department of Transportation
U.S. Department of Transportation Federal Highway Administration
City of Seattle

ALASKAN WAY VIADUCT
REPLACEMENT PROJECT
SR 99 BORED TUNNEL
CONTRACT PACKAGE 04

ROADWAY PROFILE & SUPERELEVATION

CV001

SHEET 33 OF 208 SHEETS

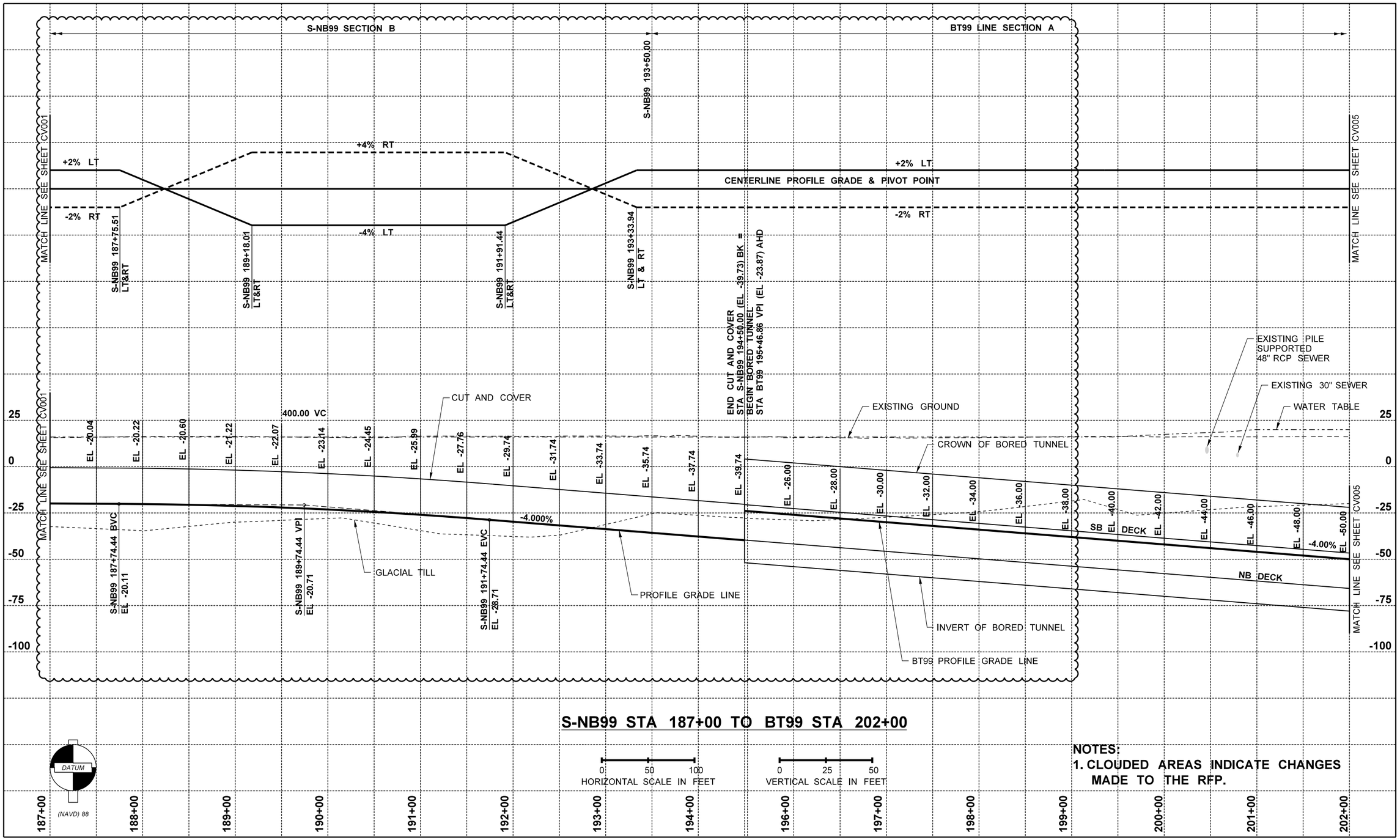

FILE NAME	IP_PWP:dms69910\46055-Txx-14CV002_OptM.DLV				REGION NO. 10	STATE WASH	FED.AID PROJ.NO.
TIME	20-OCT-2010 11:10				JOB NUMBER		
DATE	20-OCT-2010				CONTRACT NO.		LOCATION NO.
PLOTTED BY	groe						
DESIGNED BY	G. SCHWANTES						
ENTERED BY	G. ROE						
CHECKED BY	S. RINNERT						
PROJ. ENGR.	S. EVERETT						
REGIONAL ADM.	R. PAANANEN	REVISION	DATE	BY			

STEPHEN P. RINNERT STATE OF WASHINGTON 33683 REGISTERED PROFESSIONAL ENGINEER

RFP DESIGN
SUBMITTED BY
SEATTLE TUNNEL PARTNERS

NOT FOR CONSTRUCTION

Washington State Department of Transportation
U.S. Department of Transportation Federal Highway Administration
City of Seattle

ALASKAN WAY VIADUCT
REPLACEMENT PROJECT
SR 99 BORED TUNNEL
CONTRACT PACKAGE 04

ROADWAY PROFILE & SUPERELEVATION

CV002

SHEET 34 OF 208 SHEETS

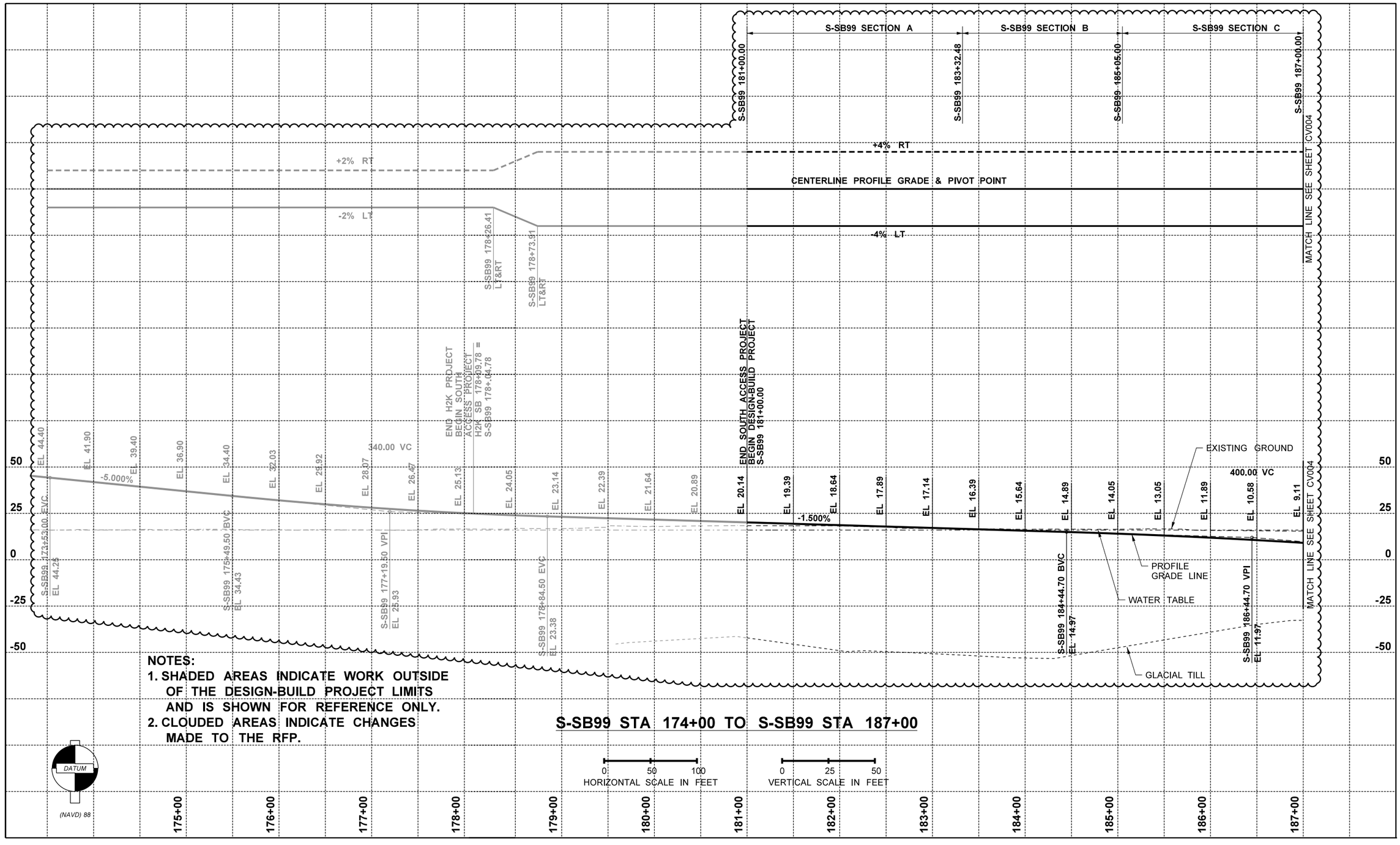

FILE NAME	IP_PWP:dms69910\46055-Txx-14CV003_OptM.DLV
TIME	20-OCT-2010 11:10
DATE	20-OCT-2010
PLOTTED BY	groe
DESIGNED BY	G. SCHWANTES
ENTERED BY	G. ROE
CHECKED BY	S. RINNERT
PROJ. ENGR.	S. EVERETT
REGIONAL ADM.	R. PAANANEN

REVISION	DATE	BY

REGION NO.	STATE	FED.AID PROJ.NO.
10	WASH	
JOB NUMBER		
CONTRACT NO.		LOCATION NO.

STEPHEN P. RINNERT — STATE OF WASHINGTON — 33683 — REGISTERED PROFESSIONAL ENGINEER

RFP DESIGN
SUBMITTED BY
SEATTLE TUNNEL PARTNERS

NOT FOR CONSTRUCTION

Washington State Department of Transportation
U.S. Department of Transportation Federal Highway Administration
City of Seattle

ALASKAN WAY VIADUCT
REPLACEMENT PROJECT
SR 99 BORED TUNNEL
CONTRACT PACKAGE 04

ROADWAY PROFILE & SUPERELEVATION

CV003

SHEET 35 OF 208 SHEETS

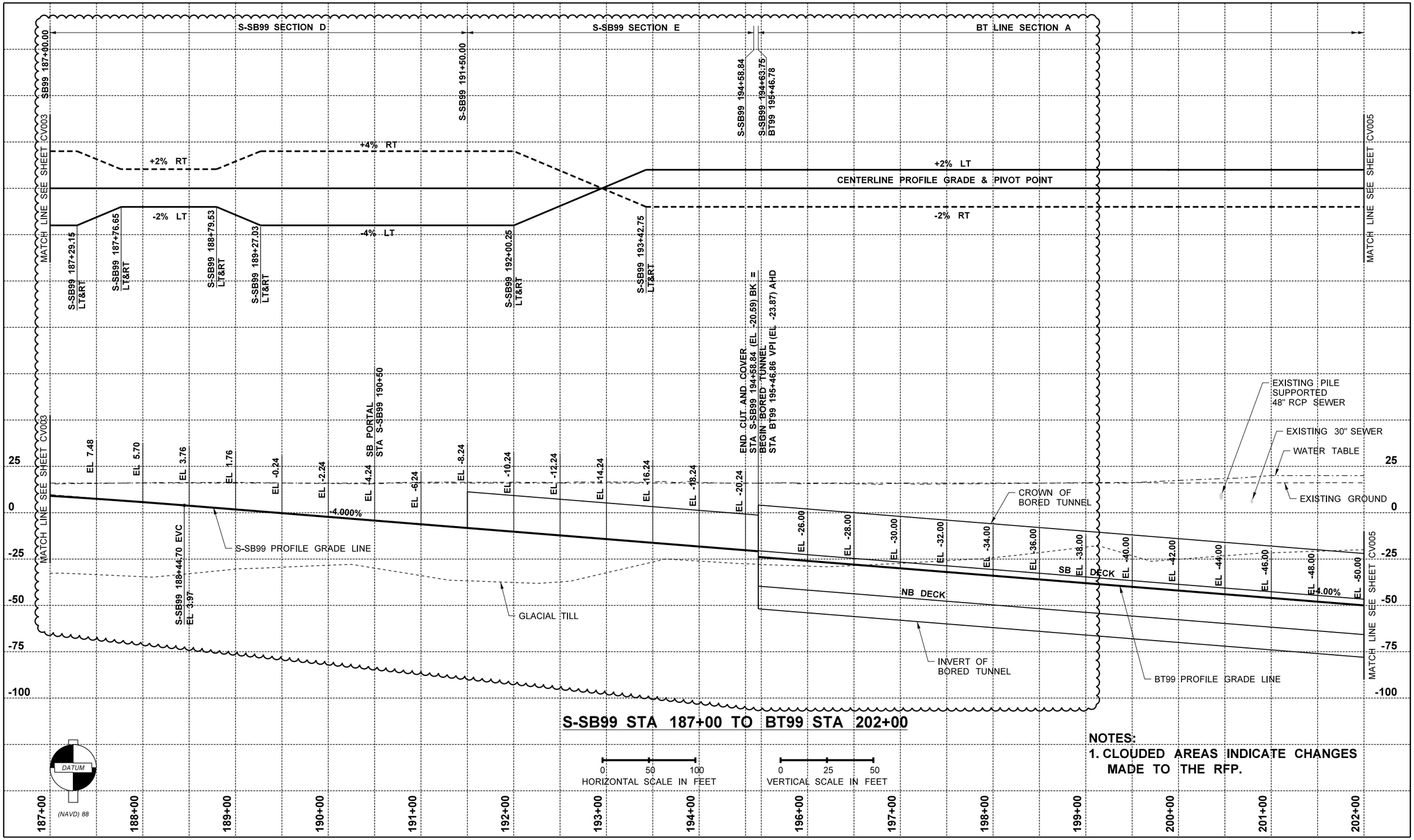

S-SB99 STA 187+00 TO BT99 STA 202+00

NOTES:

1. CLOUDED AREAS INDICATE CHANGES MADE TO THE RFP.

FILE NAME	IP_PWP:dms69910\46055-Txx-14CV004_OptM.DLV
TIME	20-OCT-2010 11:10
DATE	20-OCT-2010
PLOTTED BY	groe
DESIGNED BY	L. XU
ENTERED BY	G. ROE
CHECKED BY	S. RINNERT
PROJ. ENGR.	S. EVERETT
REGIONAL ADM.	R. PAANANEN

REVISION | DATE | BY

REGION NO. 10 | STATE WASH | FED.AID PROJ.NO.

JOB NUMBER

CONTRACT NO. | LOCATION NO.

STEPHEN P. RINNERT — STATE OF WASHINGTON — 35682 — REGISTERED PROFESSIONAL ENGINEER

RFP DESIGN

SUBMITTED BY SEATTLE TUNNEL PARTNERS

NOT FOR CONSTRUCTION

Washington State Department of Transportation

U.S. Department of Transportation Federal Highway Administration

City of Seattle

ALASKAN WAY VIADUCT REPLACEMENT PROJECT
SR 99 BORED TUNNEL
CONTRACT PACKAGE 04

ROADWAY PROFILE & SUPERELEVATION

CV004

SHEET 36 OF 208 SHEETS

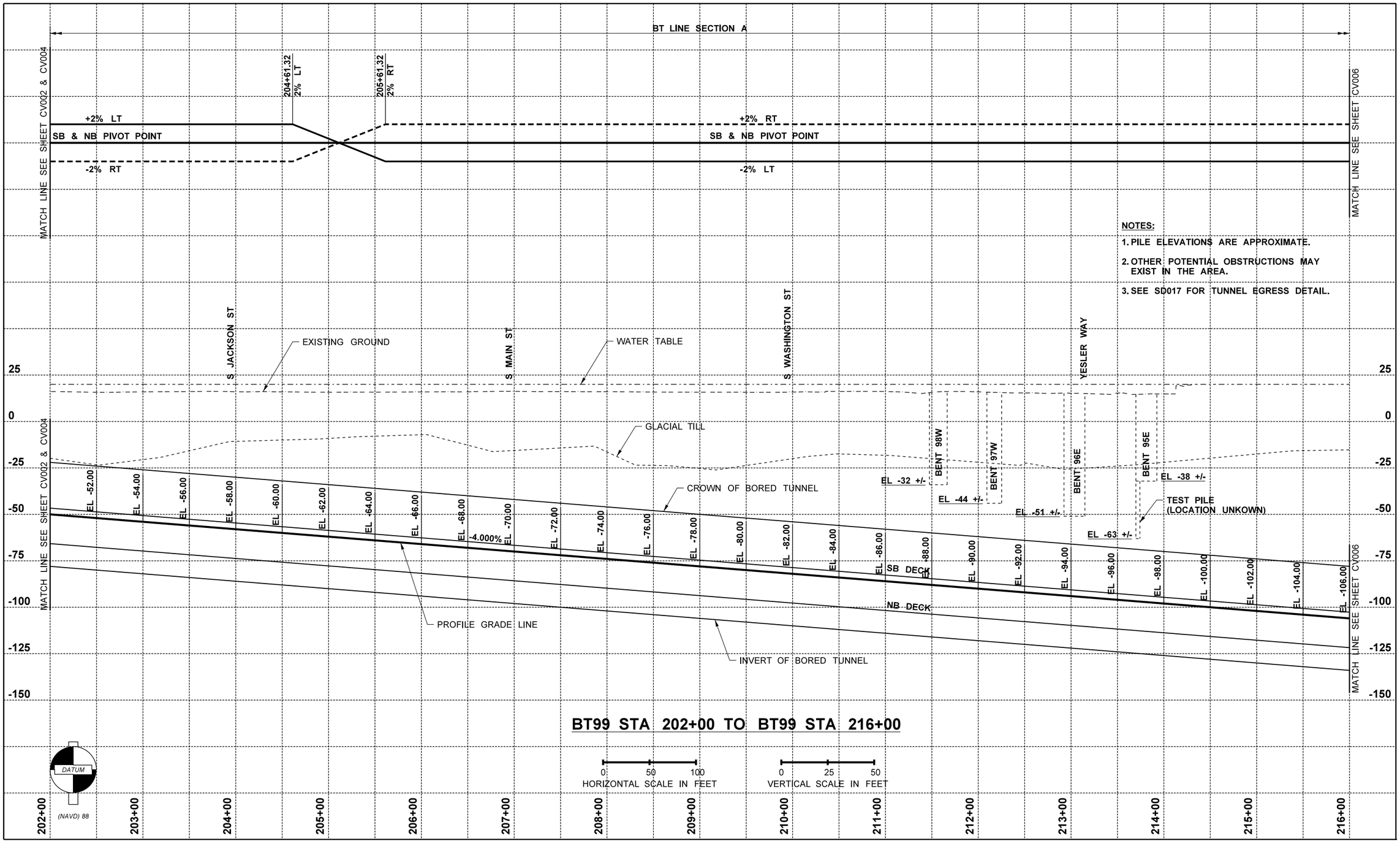

FILE NAME	IP_PWP:dms69910\46055-Txx-14CV005_OptM.DLV				REGION NO. 10	STATE WASH	FED.AID PROJ.NO.
TIME	20-OCT-2010 11:11				JOB NUMBER		
DATE	20-OCT-2010						
PLOTTED BY	groe						
DESIGNED BY	L. XU						
ENTERED BY	G. ROE						
CHECKED BY	G. SCHWANTES				CONTRACT NO.		LOCATION NO.
PROJ. ENGR.	S. EVERETT						
REGIONAL ADM.	R. PAANANEN	REVISION	DATE	BY			

STEPHEN P. RINAERT — STATE OF WASHINGTON — 33682 — REGISTERED PROFESSIONAL ENGINEER

RFP DESIGN
SUBMITTED BY
SEATTLE TUNNEL PARTNERS

NOT FOR CONSTRUCTION

Washington State Department of Transportation
U.S. Department of Transportation Federal Highway Administration
City of Seattle

ALASKAN WAY VIADUCT
REPLACEMENT PROJECT
SR 99 BORED TUNNEL
CONTRACT PACKAGE 04

ROADWAY PROFILE & SUPERELEVATION

CV005

SHEET 37 OF 208 SHEETS

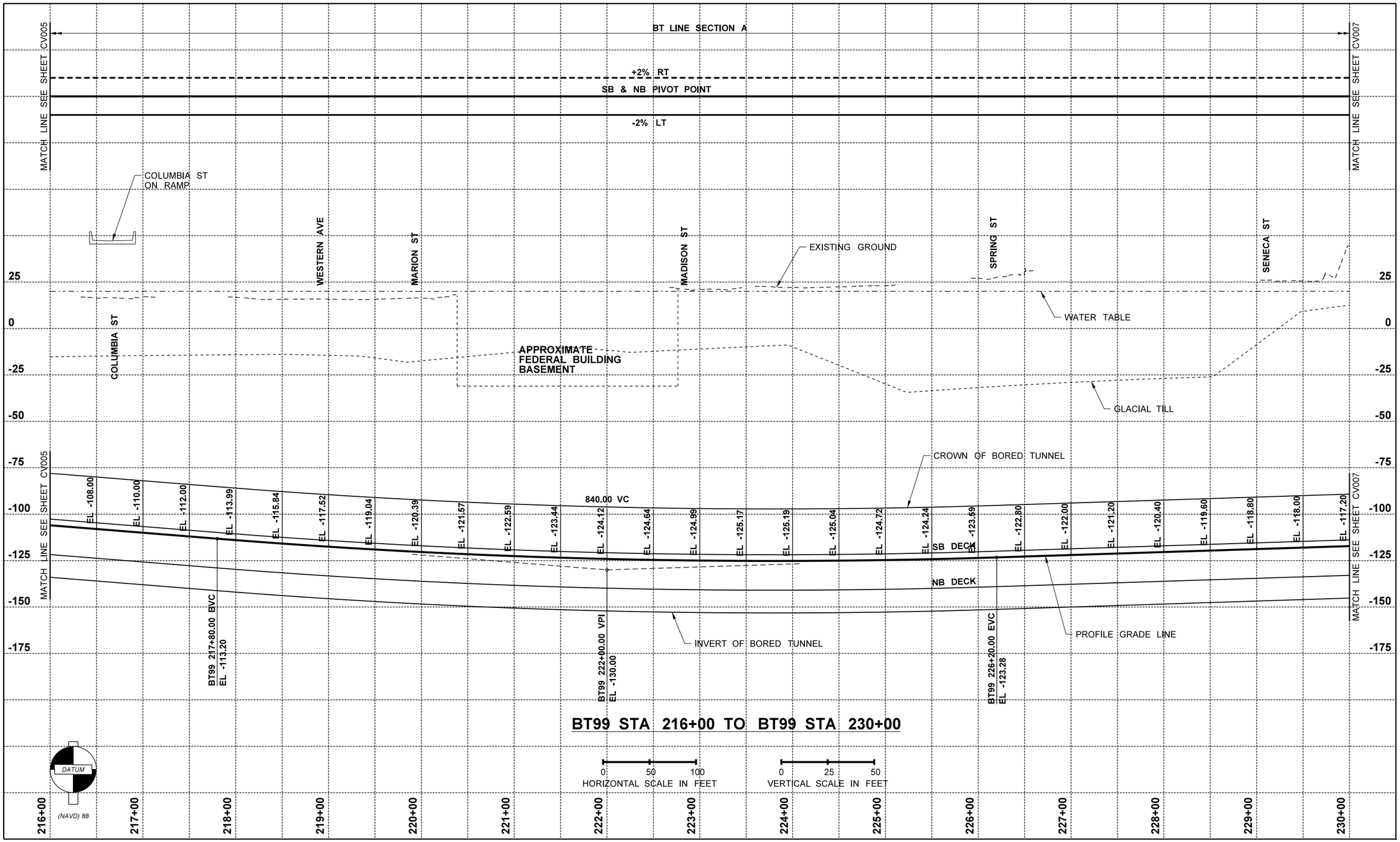

FILE NAME	IP_PWP:dms69910\46055-Txx-14CV006_OptM.DLV				REGION NO.	STATE	FED.AID PROJ.NO.
TIME	20-OCT-2010 11:11				10	WASH	
DATE	20-OCT-2010				JOB NUMBER		
PLOTTED BY	groe						
DESIGNED BY	L. XU				CONTRACT NO.		LOCATION NO.
ENTERED BY	G. ROE						
CHECKED BY	G. SCHWANTES						
PROJ. ENGR.	S. EVERETT						
REGIONAL ADM.	R. PAANANEN	REVISION	DATE	BY			

STEPHEN P. RINNERT — STATE OF WASHINGTON — 33683 — REGISTERED PROFESSIONAL ENGINEER

RFP DESIGN
SUBMITTED BY
SEATTLE TUNNEL PARTNERS

NOT FOR CONSTRUCTION

Washington State Department of Transportation
U.S. Department of Transportation Federal Highway Administration
City of Seattle

ALASKAN WAY VIADUCT
REPLACEMENT PROJECT
SR 99 BORED TUNNEL
CONTRACT PACKAGE 04

ROADWAY PROFILE & SUPERELEVATION

CV006

SHEET 38 OF 208 SHEETS

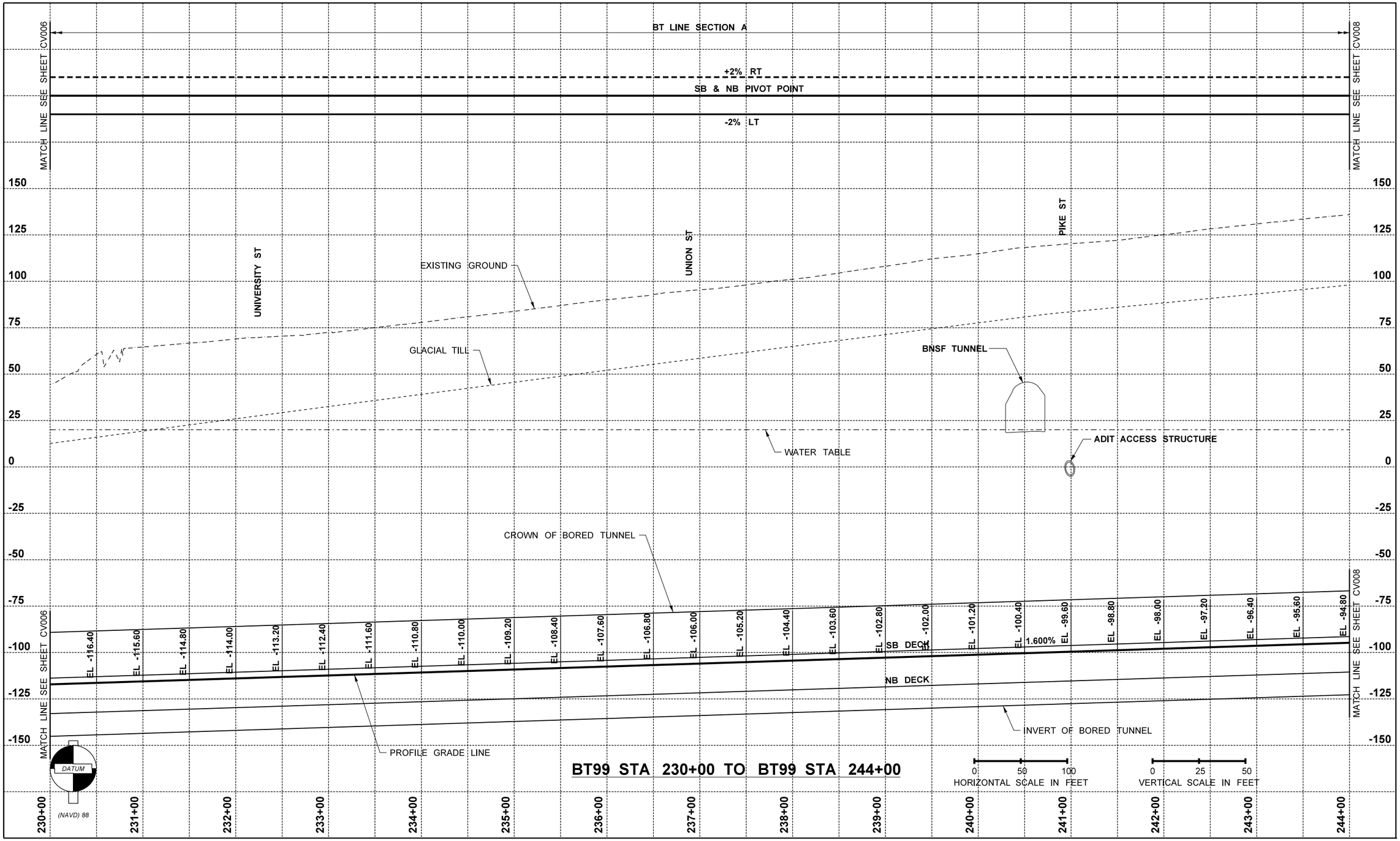

FILE NAME	IP_PWP:dms69910\46055-Txx-14CV007_OptM.DLV
TIME	20-OCT-2010 11:11
DATE	20-OCT-2010
PLOTTED BY	groe
DESIGNED BY	L. XU
ENTERED BY	G. ROE
CHECKED BY	G. SCHWANTES
PROJ. ENGR.	S. EVERETT
REGIONAL ADM.	R. PAANANEN

REVISION	DATE	BY

REGION NO.	STATE	FED.AID PROJ.NO.
10	WASH	
JOB NUMBER		
CONTRACT NO.		LOCATION NO.

STEPHEN P. RINAERT — STATE OF WASHINGTON — 33682 — REGISTERED PROFESSIONAL ENGINEER

RFP DESIGN
SUBMITTED BY
SEATTLE TUNNEL PARTNERS

NOT FOR CONSTRUCTION

Washington State Department of Transportation
U.S. Department of Transportation Federal Highway Administration
City of Seattle

ALASKAN WAY VIADUCT
REPLACEMENT PROJECT
SR 99 BORED TUNNEL
CONTRACT PACKAGE 04

ROADWAY PROFILE & SUPERELEVATION

CV007

SHEET 39 OF 208 SHEETS

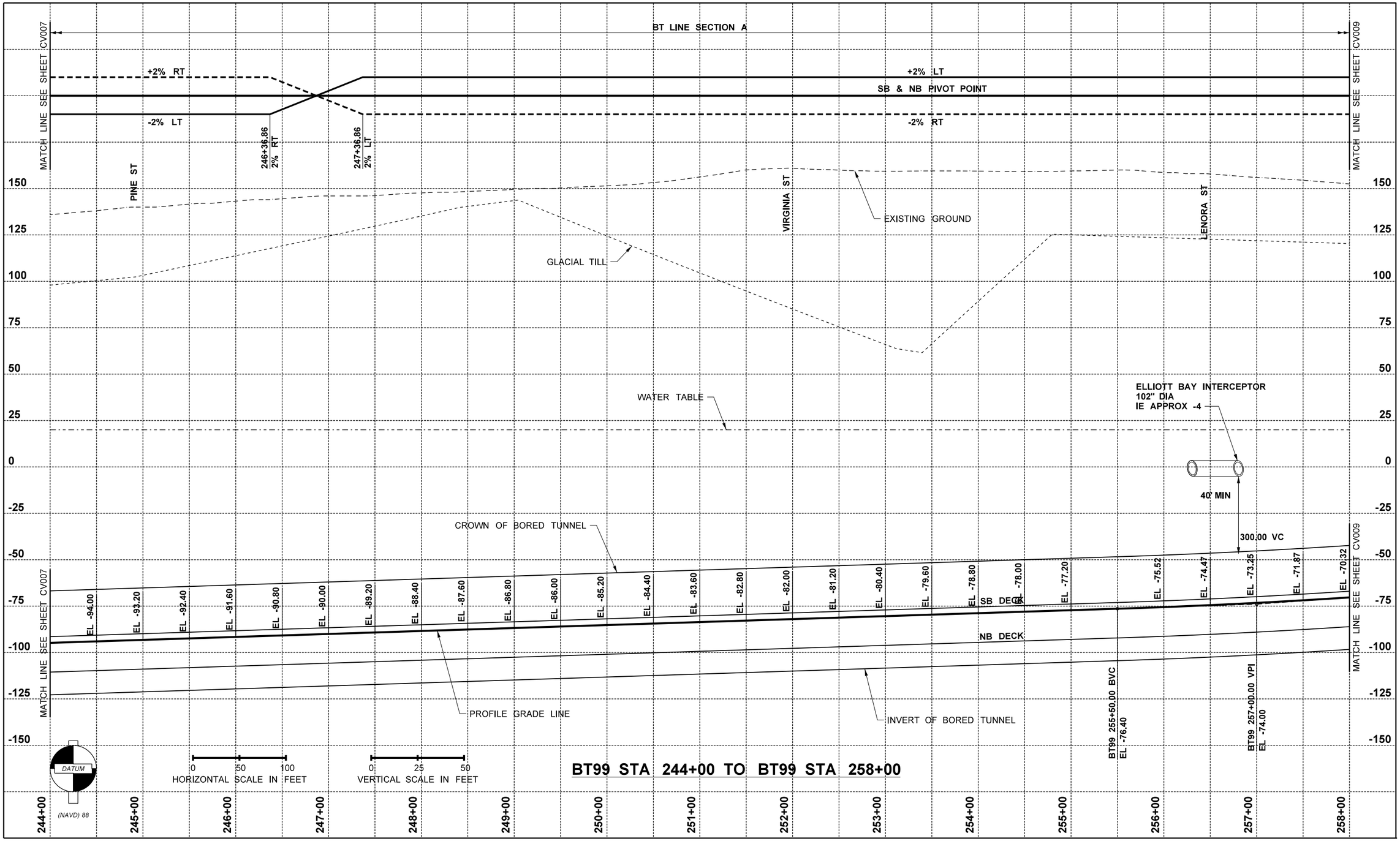

FILE NAME	IP_PWP:dms69910\46055-Txx-14CV008_OptM.DLV
TIME	20-OCT-2010 11:11
DATE	20-OCT-2010
PLOTTED BY	groe
DESIGNED BY	L. XU
ENTERED BY	G. ROE
CHECKED BY	G. SCHWANTES
PROJ. ENGR.	S. EVERETT
REGIONAL ADM.	R. PAANANEN

REVISION	DATE	BY

REGION NO.	STATE	FED.AID PROJ.NO.
10	WASH	
JOB NUMBER		
CONTRACT NO.		LOCATION NO.

STEPHEN P. RINNERT — STATE OF WASHINGTON — 35682 — REGISTERED PROFESSIONAL ENGINEER

RFP DESIGN
SUBMITTED BY
SEATTLE TUNNEL PARTNERS

NOT FOR CONSTRUCTION

Washington State Department of Transportation
U.S. Department of Transportation Federal Highway Administration
City of Seattle

ALASKAN WAY VIADUCT
REPLACEMENT PROJECT
SR 99 BORED TUNNEL
CONTRACT PACKAGE 04

ROADWAY PROFILE & SUPERELEVATION

CV008

SHEET 40 OF 208 SHEETS

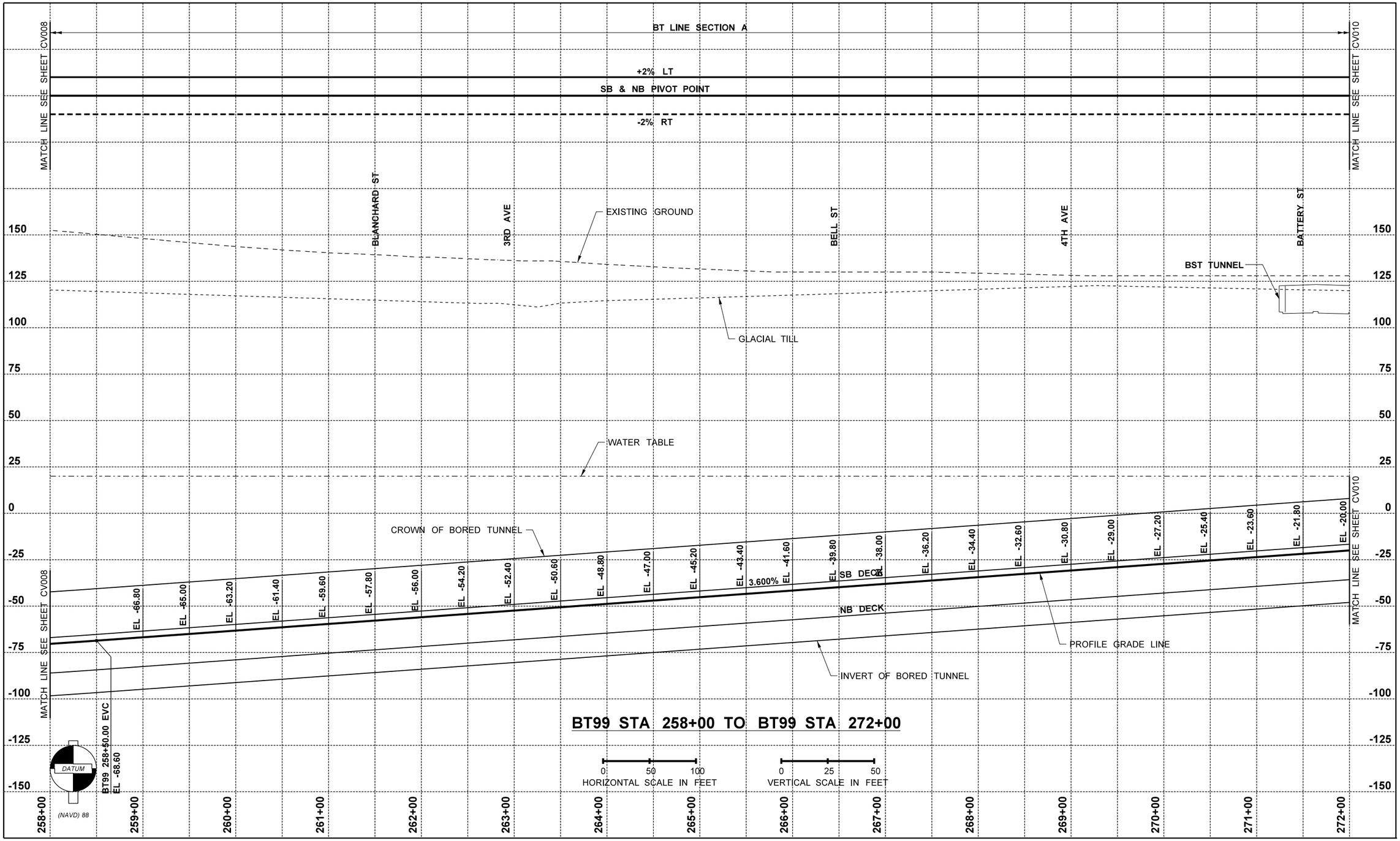

FILE NAME	IP_PWP:dms69910\46055-Txx-14CV009_OptM.DLV				REGION NO.	STATE	FED.AID PROJ.NO.
TIME	20-OCT-2010 11:12				10	WASH	
DATE	20-OCT-2010				JOB NUMBER		
PLOTTED BY	groe						
DESIGNED BY	L. XU						
ENTERED BY	G. ROE				CONTRACT NO.		LOCATION NO.
CHECKED BY	G. SCHWANTES						
PROJ. ENGR.	S. EVERETT						
REGIONAL ADM.	R. PAANANEN	REVISION	DATE	BY			

STEPHEN P. RINNERT — STATE OF WASHINGTON — 33682 — REGISTERED PROFESSIONAL ENGINEER

RFP DESIGN
SUBMITTED BY
SEATTLE TUNNEL PARTNERS

NOT FOR CONSTRUCTION

Washington State Department of Transportation
U.S. Department of Transportation Federal Highway Administration
City of Seattle

ALASKAN WAY VIADUCT
REPLACEMENT PROJECT
SR 99 BORED TUNNEL
CONTRACT PACKAGE 04

ROADWAY PROFILE & SUPERELEVATION

CV009

SHEET 41 OF 208 SHEETS

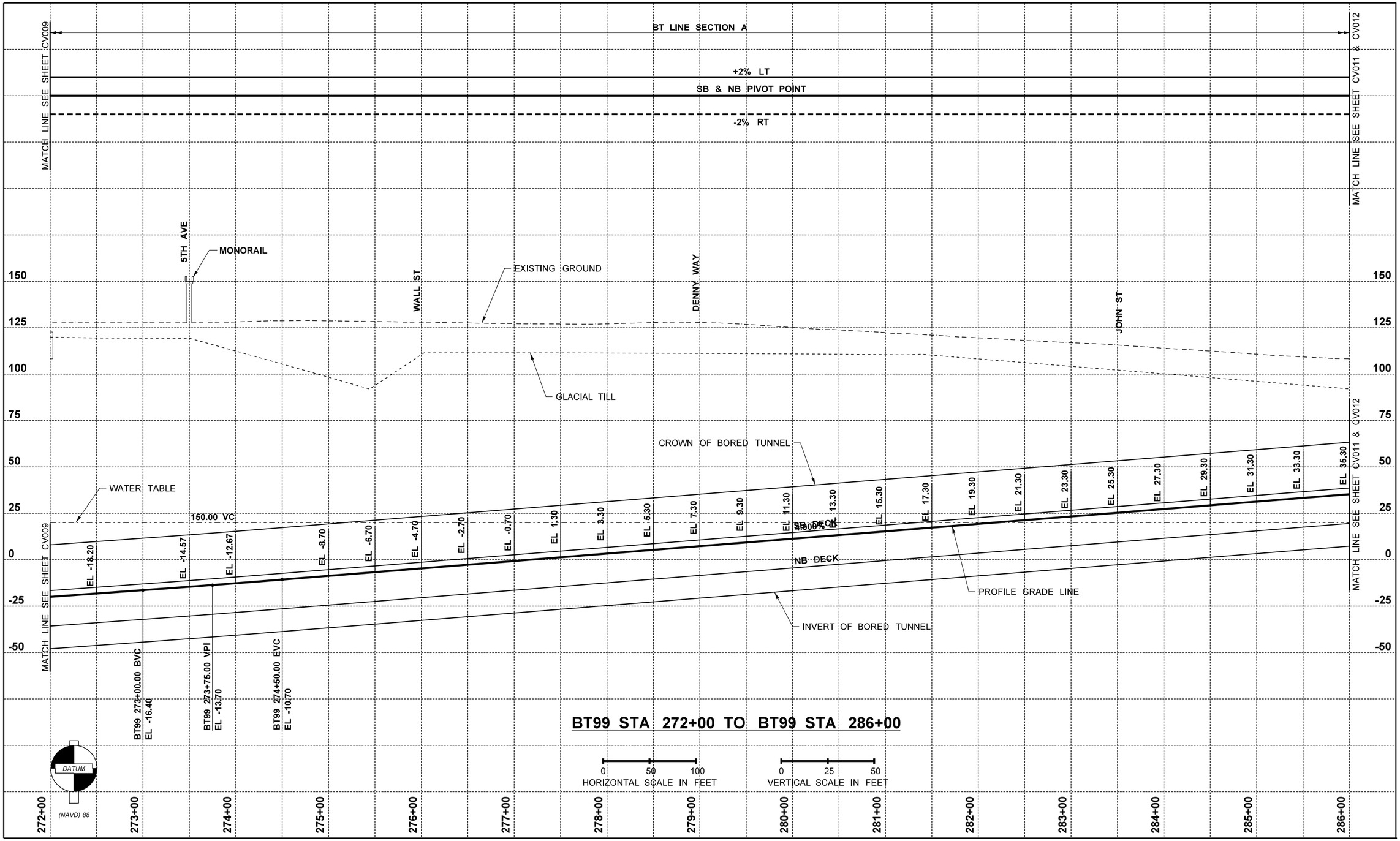

BT99 STA 272+00 TO BT99 STA 286+00

FILE NAME	IP_PWP:dms69910\46055-Txx-14CV010_OptM.DLV
TIME	20-OCT-2010 11:12
DATE	20-OCT-2010
PLOTTED BY	groe
DESIGNED BY	L. XU
ENTERED BY	G. ROE
CHECKED BY	G. SCHWANTES
PROJ. ENGR.	S. EVERETT
REGIONAL ADM.	R. PAANANEN

REVISION	DATE	BY

REGION NO.	STATE	FED.AID PROJ.NO.
10	WASH	
JOB NUMBER		
CONTRACT NO.		LOCATION NO.

STEPHEN P. RINAERT — STATE OF WASHINGTON — 33682 — REGISTERED PROFESSIONAL ENGINEER

RFP DESIGN
SUBMITTED BY
SEATTLE TUNNEL PARTNERS

NOT FOR CONSTRUCTION

Washington State Department of Transportation
U.S. Department of Transportation Federal Highway Administration
City of Seattle

ALASKAN WAY VIADUCT
REPLACEMENT PROJECT
SR 99 BORED TUNNEL
CONTRACT PACKAGE 04

ROADWAY PROFILE & SUPERELEVATION

CV010

SHEET 42 OF 208 SHEETS

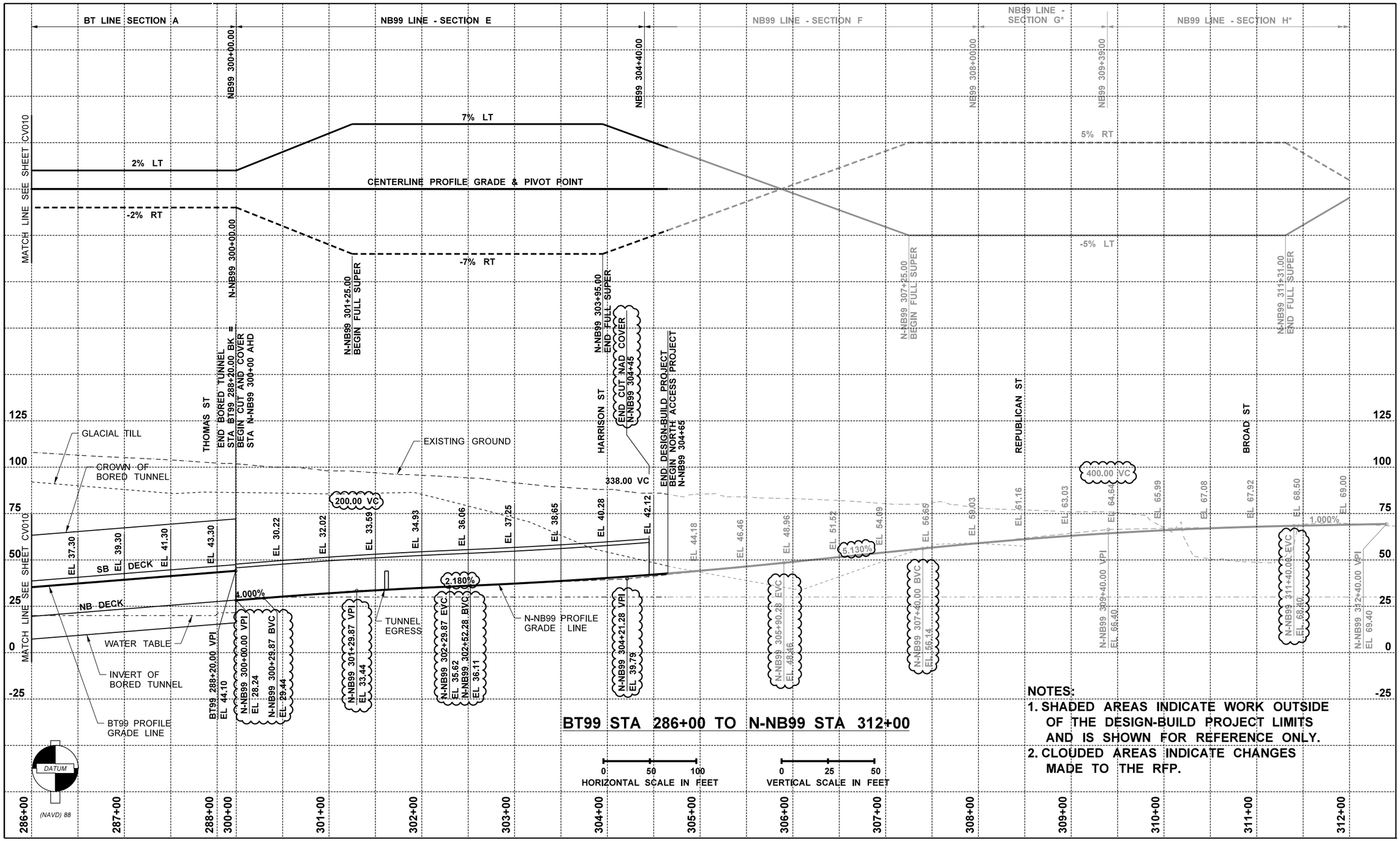

FILE NAME	IP_PWP:dms69910\46055-Txx-14CV011_OptM.DLV
TIME	20-OCT-2010 11:12
DATE	20-OCT-2010
PLOTTED BY	groe
DESIGNED BY	L. XU
ENTERED BY	G. ROE
CHECKED BY	G. SCHWANTES
PROJ. ENGR.	S. EVERETT
REGIONAL ADM.	R. PAANANEN

REVISION | DATE | BY

REGION NO.	STATE	FED.AID PROJ.NO.
10	WASH	
JOB NUMBER		
CONTRACT NO.		LOCATION NO.

STEPHEN P. RINAERT — STATE OF WASHINGTON — 33682 — REGISTERED PROFESSIONAL ENGINEER

RFP DESIGN
SUBMITTED BY
SEATTLE TUNNEL PARTNERS

NOT FOR CONSTRUCTION

Washington State Department of Transportation
U.S. Department of Transportation Federal Highway Administration
City of Seattle

ALASKAN WAY VIADUCT
REPLACEMENT PROJECT
SR 99 BORED TUNNEL
CONTRACT PACKAGE 04

ROADWAY PROFILE & SUPERELEVATION

CV011

SHEET 43 OF 208 SHEETS

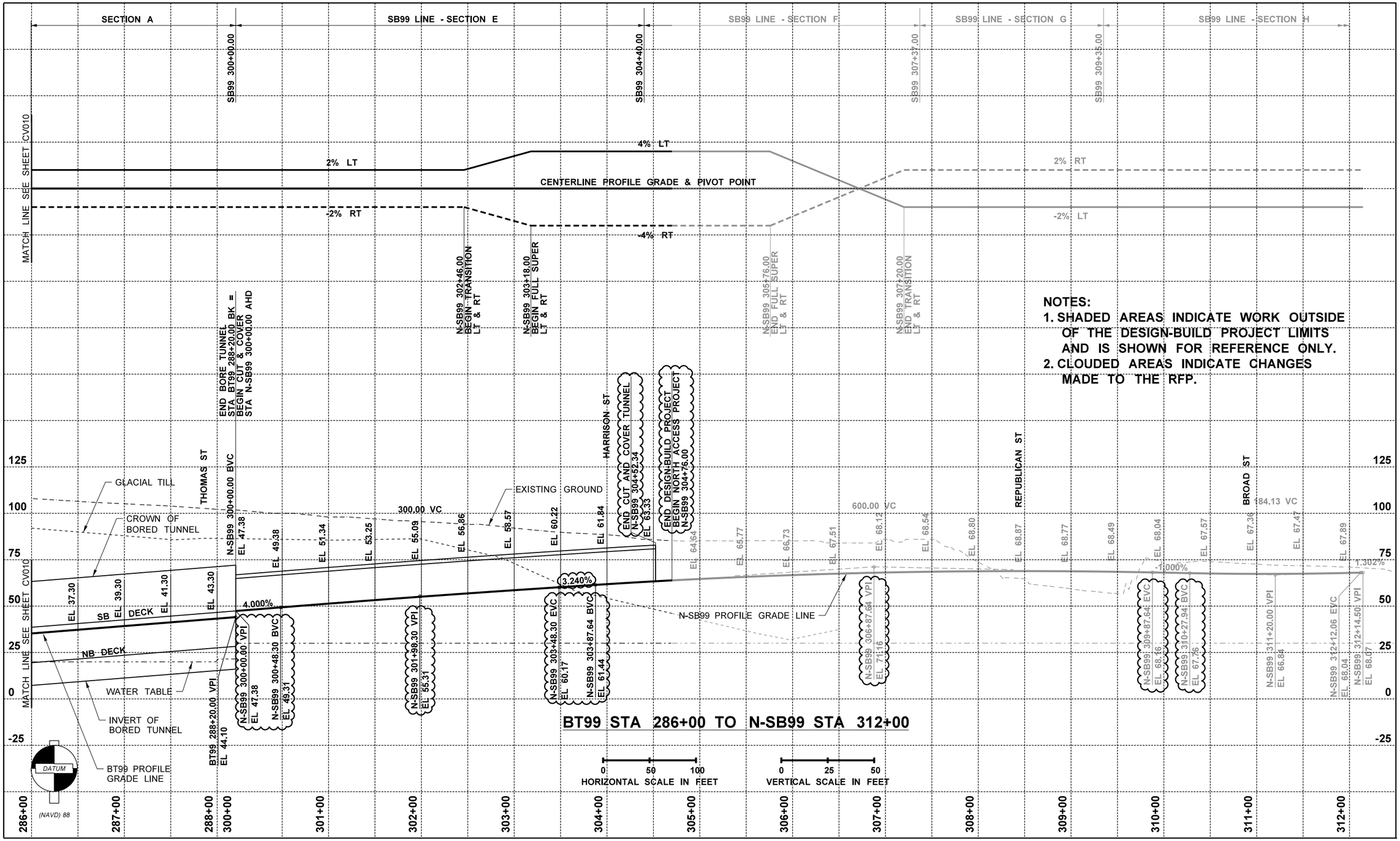

NOTES:

1. SHADED AREAS INDICATE WORK OUTSIDE OF THE DESIGN-BUILD PROJECT LIMITS AND IS SHOWN FOR REFERENCE ONLY.
2. CLOUDED AREAS INDICATE CHANGES MADE TO THE RFP.

FILE NAME	IP_PWP:dms69910\46055-Txx-14CV012_OptM.DLV
TIME	20-OCT-2010 11:12
DATE	20-OCT-2010
PLOTTED BY	groe
DESIGNED BY	L. XU
ENTERED BY	G. ROE
CHECKED BY	G. SCHWANTES
PROJ. ENGR.	S. EVERETT
REGIONAL ADM.	R. PAANANEN

REVISION | DATE | BY

REGION NO.	STATE	FED.AID PROJ.NO.
10	WASH	
JOB NUMBER		
CONTRACT NO.		LOCATION NO.

STEPHEN P. RINAERT — STATE OF WASHINGTON — 33682 — REGISTERED PROFESSIONAL ENGINEER

RFP DESIGN
SUBMITTED BY
SEATTLE TUNNEL PARTNERS

NOT FOR CONSTRUCTION

Washington State Department of Transportation
U.S. Department of Transportation Federal Highway Administration
City of Seattle

ALASKAN WAY VIADUCT
REPLACEMENT PROJECT
SR 99 BORED TUNNEL
CONTRACT PACKAGE 04

ROADWAY PROFILE & SUPERELEVATION

CV012

SHEET 44 OF 208 SHEETS

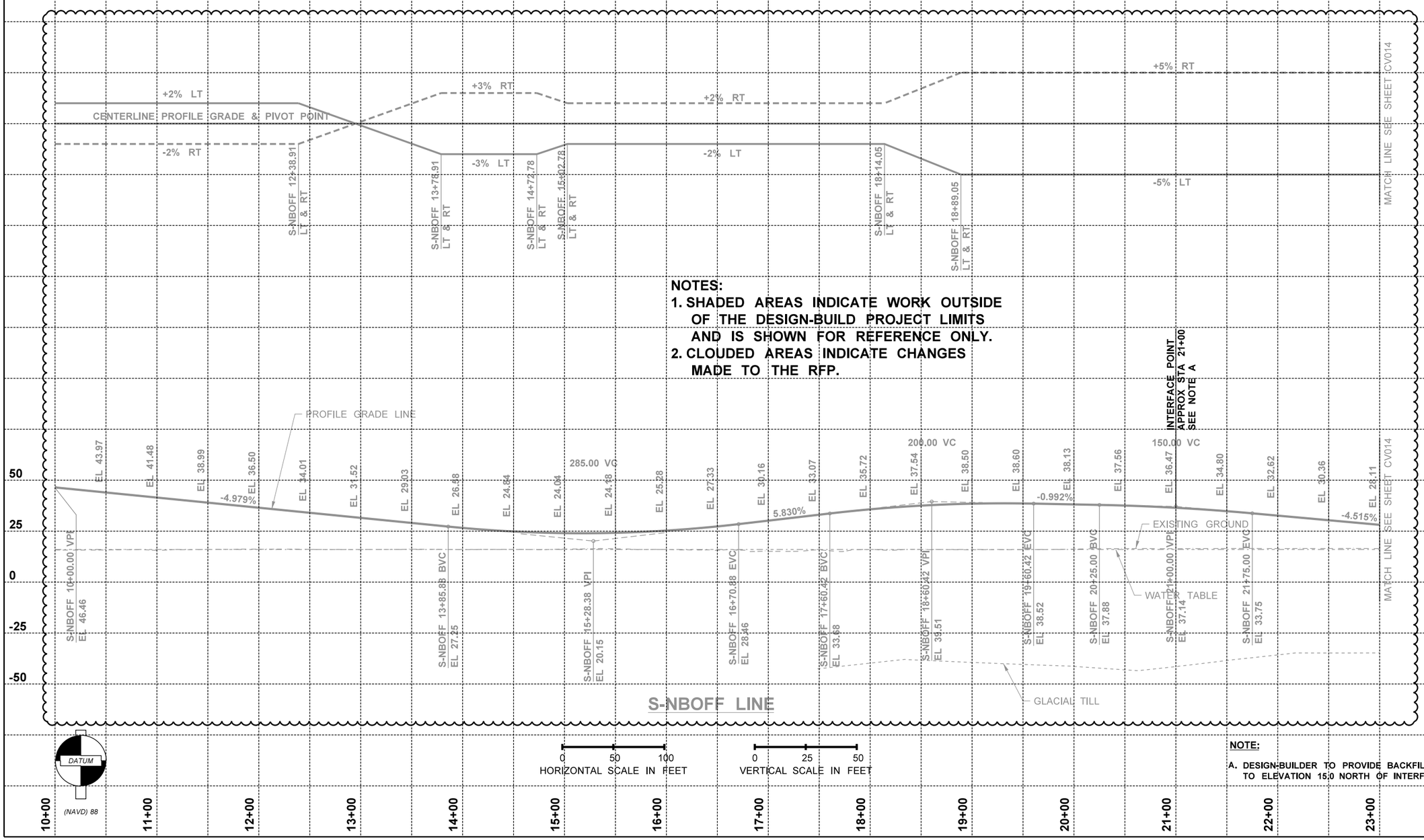

NOTE:

A. DESIGN-BUILDER TO PROVIDE BACKFILL AND COMPACTION TO ELEVATION 15.0 NORTH OF INTERFACE POINT.

FILE NAME	IP_PWP:dms69910\46055-Txx-14CV013_OptM.DLV					
TIME	20-OCT-2010 11:13					
DATE	20-OCT-2010					
PLOTTED BY	groe					
DESIGNED BY	G. SCHWANTES					
ENTERED BY	G. ROE					
CHECKED BY	D. OLSEN					
PROJ. ENGR.	S. EVERETT					
REGIONAL ADM.	R. PAANANEN	REVISION	DATE	BY		

REGION NO.	STATE	FED.AID PROJ.NO.
10	WASH	
JOB NUMBER		
CONTRACT NO.		LOCATION NO.

STEPHEN P. RINNERT — STATE OF WASHINGTON — 33682 — REGISTERED PROFESSIONAL ENGINEER

RFP DESIGN

SUBMITTED BY
SEATTLE TUNNEL PARTNERS

NOT FOR CONSTRUCTION

Washington State Department of Transportation

U.S. Department of Transportation Federal Highway Administration

City of Seattle

ALASKAN WAY VIADUCT
REPLACEMENT PROJECT
SR 99 BORED TUNNEL
CONTRACT PACKAGE 04

ROADWAY PROFILE & SUPERELEVATION

CV013

SHEET 45 OF 208 SHEETS

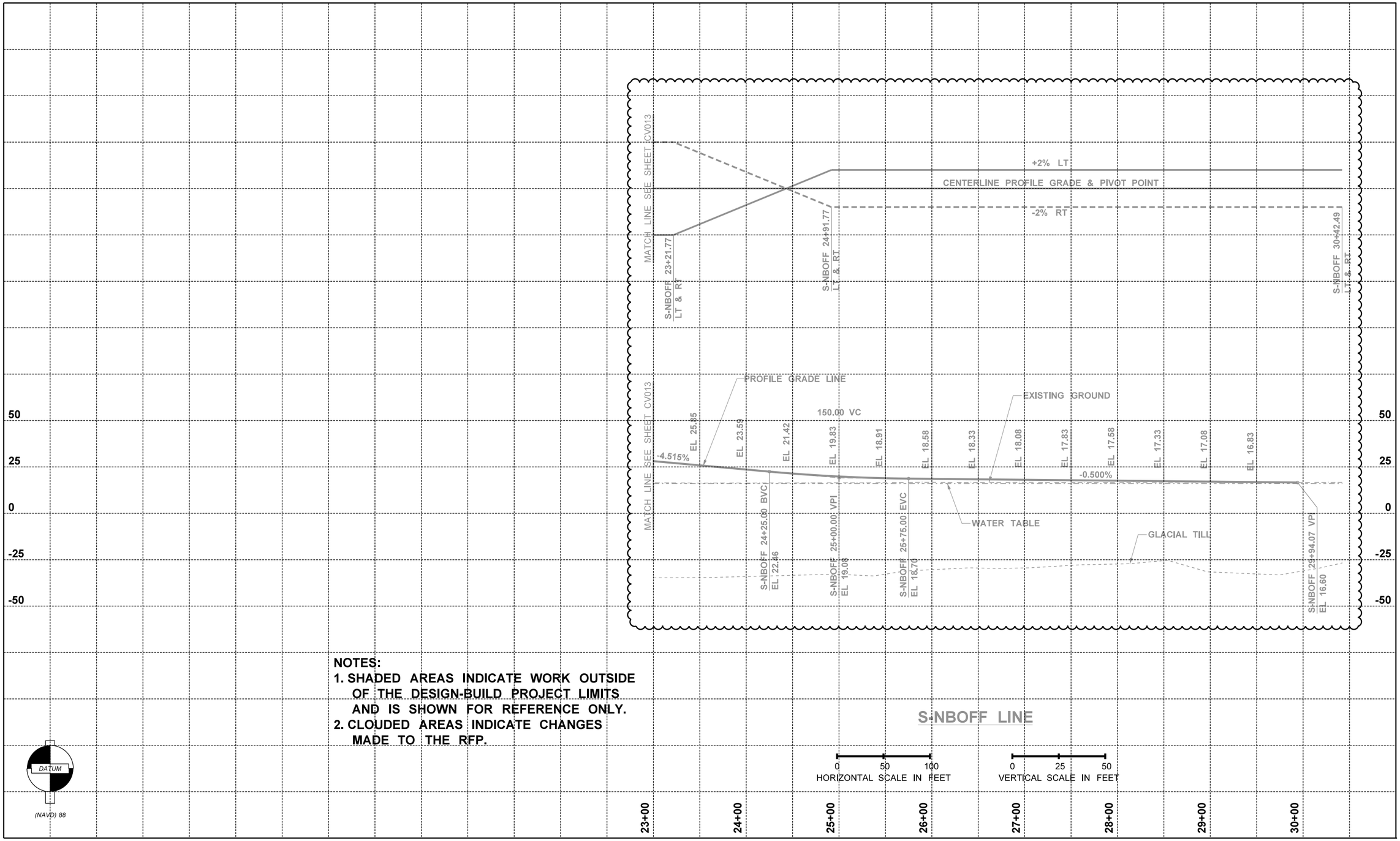

NOTES:

1. SHADED AREAS INDICATE WORK OUTSIDE OF THE DESIGN-BUILD PROJECT LIMITS AND IS SHOWN FOR REFERENCE ONLY.
2. CLOUDED AREAS INDICATE CHANGES MADE TO THE RFP.

FILE NAME	IP_PWP:dms69910\46055-Txx-14CV014_OptM.DLV
TIME	21-OCT-2010 06:03
DATE	21-OCT-2010
PLOTTED BY	groe
DESIGNED BY	G. SCHWANTES
ENTERED BY	G. ROE
CHECKED BY	D. OLSEN
PROJ. ENGR.	S. EVERETT
REGIONAL ADM.	R. PAANANEN

REVISION	DATE	BY

REGION NO.	STATE	FED.AID PROJ.NO.
10	WASH	
JOB NUMBER		
CONTRACT NO.		LOCATION NO.

STEPHEN P. RINNERT — STATE OF WASHINGTON — 35682 — REGISTERED PROFESSIONAL ENGINEER

RFP DESIGN

SUBMITTED BY
SEATTLE TUNNEL PARTNERS

NOT FOR CONSTRUCTION

Washington State Department of Transportation
U.S. Department of Transportation Federal Highway Administration
City of Seattle

ALASKAN WAY VIADUCT
REPLACEMENT PROJECT
SR 99 BORED TUNNEL
CONTRACT PACKAGE 04

ROADWAY PROFILE & SUPERELEVATION

CV014

SHEET 46 OF 208 SHEETS

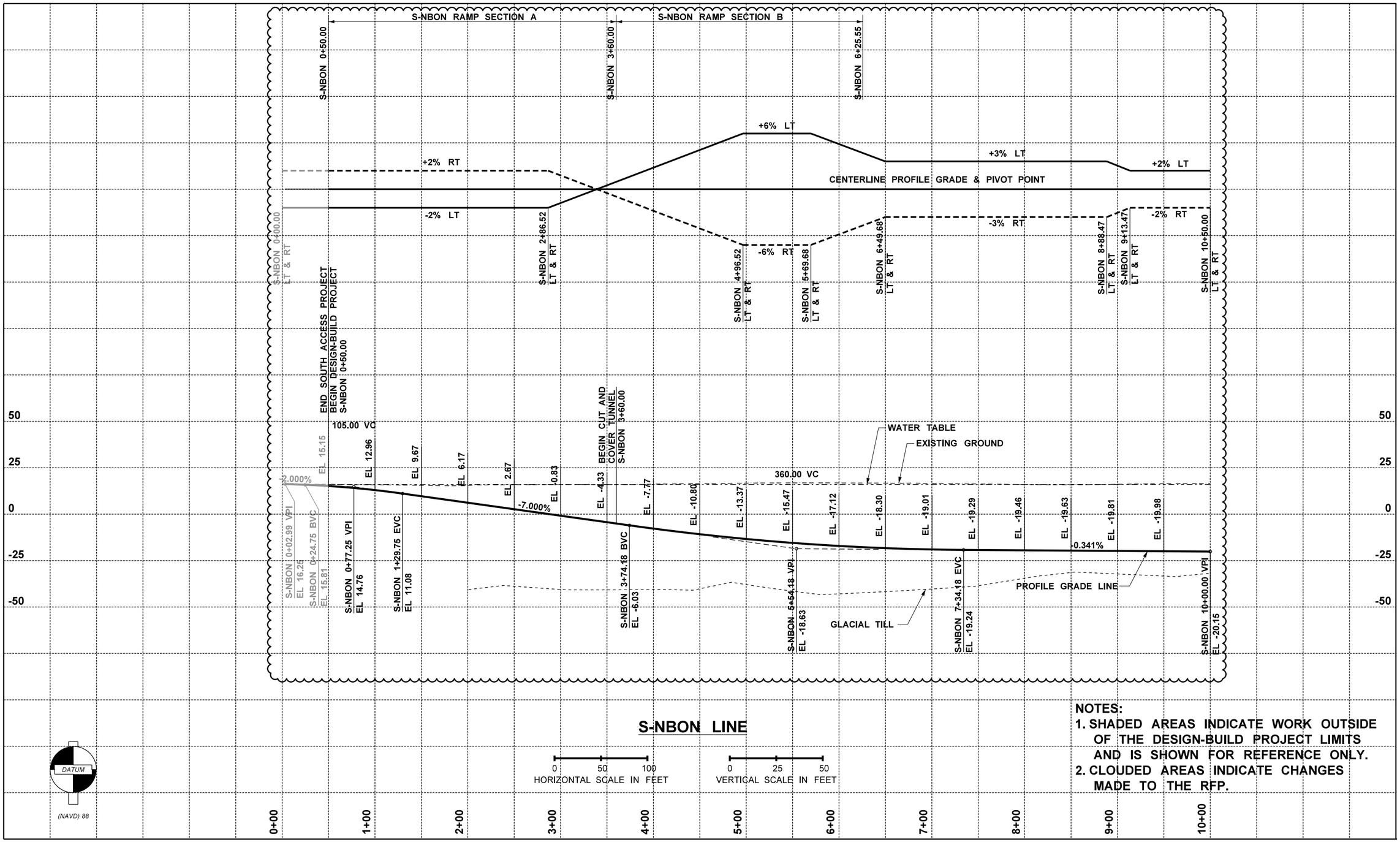

S-NBON LINE

NOTES:
1. SHADED AREAS INDICATE WORK OUTSIDE OF THE DESIGN-BUILD PROJECT LIMITS AND IS SHOWN FOR REFERENCE ONLY.
2. CLOUDED AREAS INDICATE CHANGES MADE TO THE RFP.

FILE NAME	IP_PWP:dms69910\46055-Txx-14CV015_OptM.DLV
TIME	20-OCT-2010 11:13
DATE	20-OCT-2010
PLOTTED BY	groe
DESIGNED BY	G. SCHWANTES
ENTERED BY	G. ROE
CHECKED BY	D. OLSEN
PROJ. ENGR.	S. EVERETT
REGIONAL ADM.	R. PAANANEN

REVISION | DATE | BY

REGION NO. 10 | STATE WASH | FED.AID PROJ.NO.

JOB NUMBER

CONTRACT NO. | LOCATION NO.

STEPHEN P. RINNERT — STATE OF WASHINGTON — 35682 — REGISTERED PROFESSIONAL ENGINEER

RFP DESIGN
SUBMITTED BY
SEATTLE TUNNEL PARTNERS

NOT FOR CONSTRUCTION

Washington State Department of Transportation
U.S. Department of Transportation Federal Highway Administration
City of Seattle

ALASKAN WAY VIADUCT
REPLACEMENT PROJECT
SR 99 BORED TUNNEL
CONTRACT PACKAGE 04

ROADWAY PROFILE & SUPERELEVATION

CV015

SHEET 47 OF 208 SHEETS

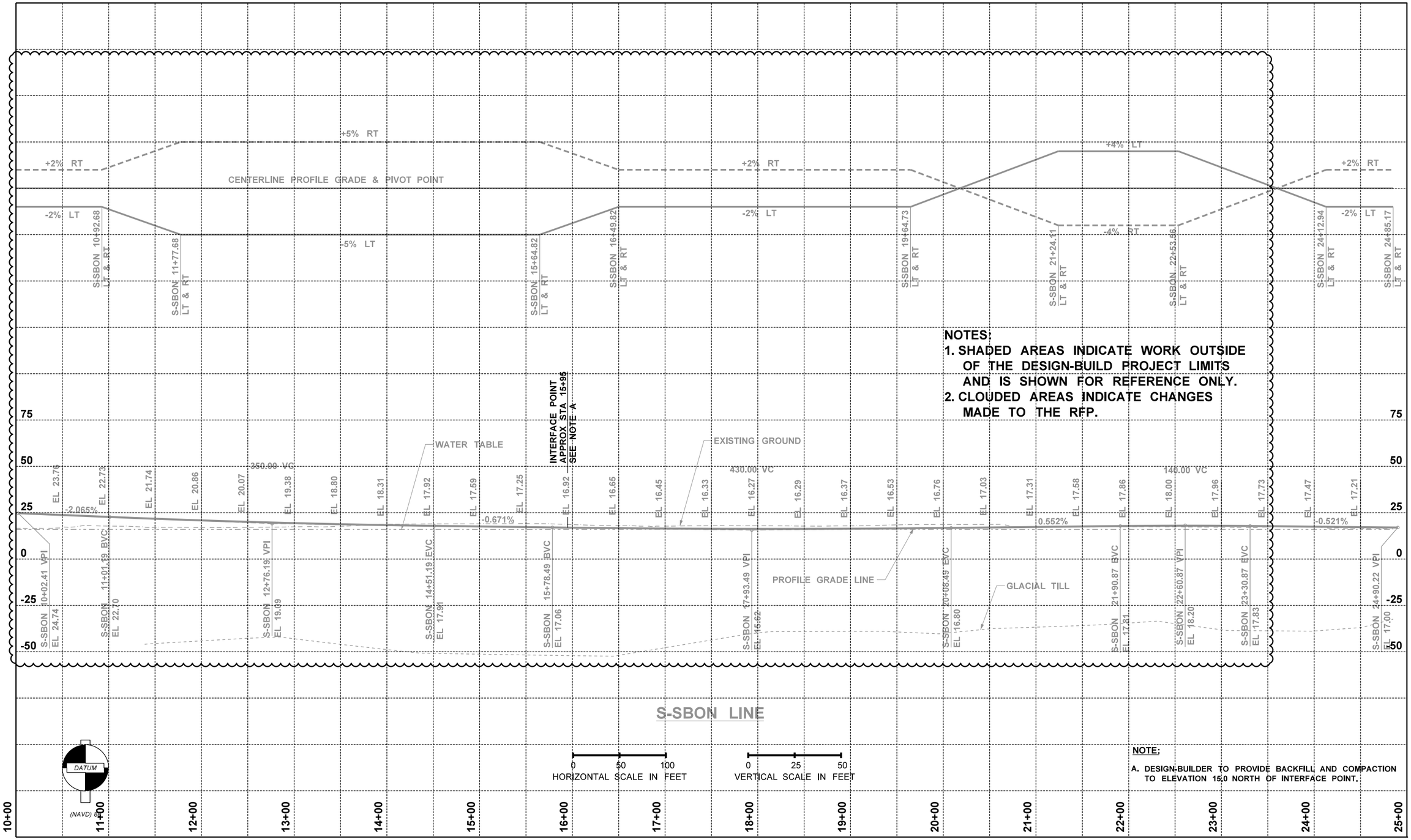

NOTES:

1. SHADED AREAS INDICATE WORK OUTSIDE OF THE DESIGN-BUILD PROJECT LIMITS AND IS SHOWN FOR REFERENCE ONLY.
2. CLOUDED AREAS INDICATE CHANGES MADE TO THE RFP.

NOTE:

A. DESIGN-BUILDER TO PROVIDE BACKFILL AND COMPACTION TO ELEVATION 15.0 NORTH OF INTERFACE POINT.

FILE NAME	IP_PWP:dms69910\46055-Txx-14CV016_OptM.DLV				REGION NO. 10	STATE WASH	FED.AID PROJ.NO.
TIME	20-OCT-2010 11:13				JOB NUMBER		
DATE	20-OCT-2010						
PLOTTED BY	groe						
DESIGNED BY	G. SCHWANTES				CONTRACT NO.		LOCATION NO.
ENTERED BY	G. ROE						
CHECKED BY	D. OLSEN						
PROJ. ENGR.	S. EVERETT						
REGIONAL ADM.	R. PAANANEN	REVISION	DATE	BY			

STEPHEN P. RINAERT — STATE OF WASHINGTON — 33682 — REGISTERED PROFESSIONAL ENGINEER

RFP DESIGN

SUBMITTED BY SEATTLE TUNNEL PARTNERS

NOT FOR CONSTRUCTION

Washington State Department of Transportation

U.S. Department of Transportation Federal Highway Administration

City of Seattle

ALASKAN WAY VIADUCT REPLACEMENT PROJECT
SR 99 BORED TUNNEL
CONTRACT PACKAGE 04

ROADWAY PROFILE & SUPERELEVATION

CV016

SHEET 48 OF 208 SHEETS

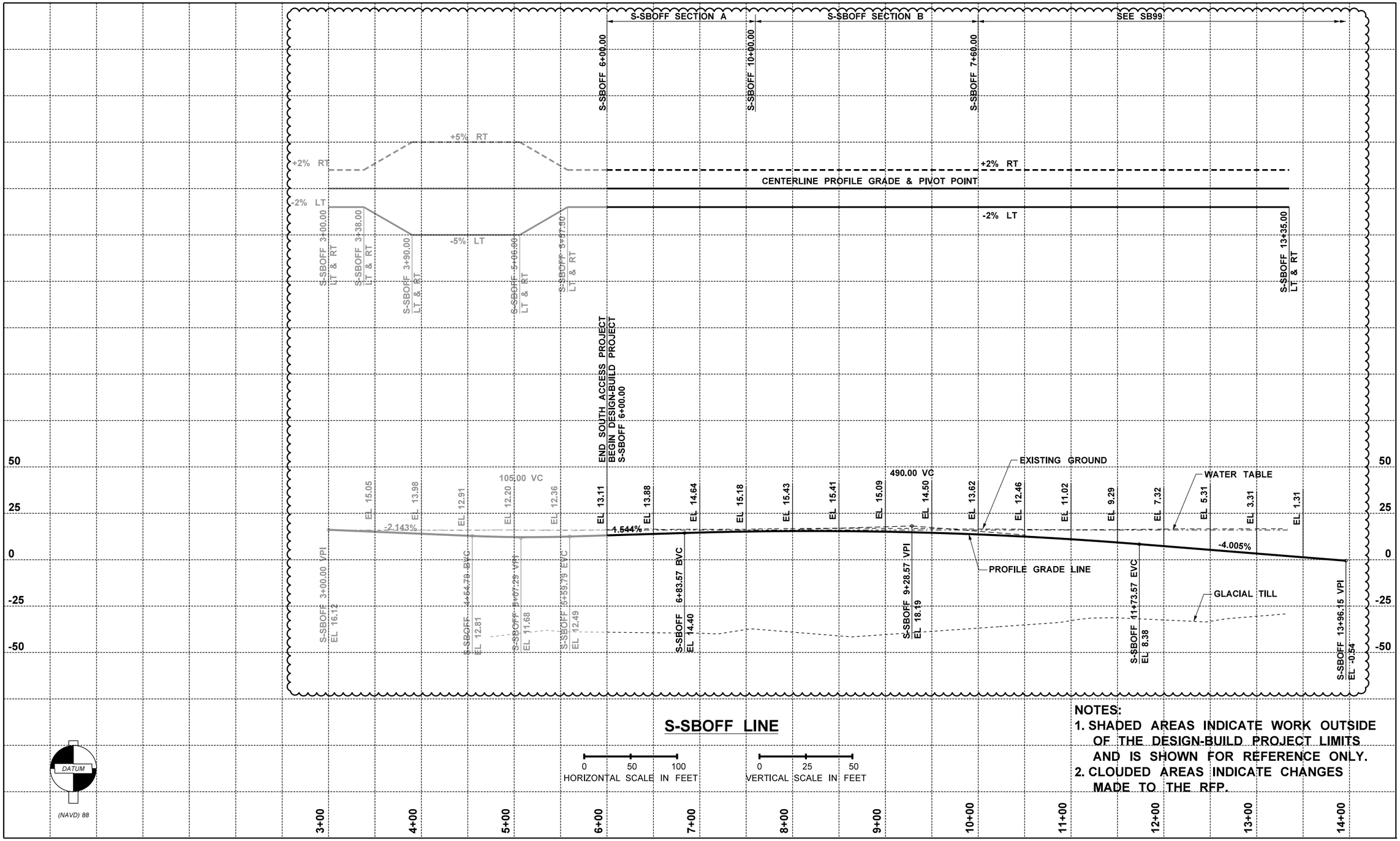

S-SBOFF LINE

NOTES:
1. SHADED AREAS INDICATE WORK OUTSIDE OF THE DESIGN-BUILD PROJECT LIMITS AND IS SHOWN FOR REFERENCE ONLY.
2. CLOUDED AREAS INDICATE CHANGES MADE TO THE RFP.

FILE NAME	IP_PWP:dms69910\46055-Txx-14CV017_OptM.DLV
TIME	20-OCT-2010 11:14
DATE	20-OCT-2010
PLOTTED BY	groe
DESIGNED BY	L. XU
ENTERED BY	G. ROE
CHECKED BY	S. RINNERT
PROJ. ENGR.	S. EVERETT
REGIONAL ADM.	R. PAANANEN

REVISION	DATE	BY

REGION NO.	STATE	FED.AID PROJ.NO.
10	WASH	
JOB NUMBER		
CONTRACT NO.		LOCATION NO.

STEPHEN P. RINNERT — STATE OF WASHINGTON — 33682 — REGISTERED PROFESSIONAL ENGINEER

RFP DESIGN
SUBMITTED BY
SEATTLE TUNNEL PARTNERS

NOT FOR CONSTRUCTION

Washington State Department of Transportation
U.S. Department of Transportation Federal Highway Administration
City of Seattle

ALASKAN WAY VIADUCT
REPLACEMENT PROJECT
SR 99 BORED TUNNEL
CONTRACT PACKAGE 04

ROADWAY PROFILE & SUPERELEVATION

CV017

SHEET 49 OF 208 SHEETS

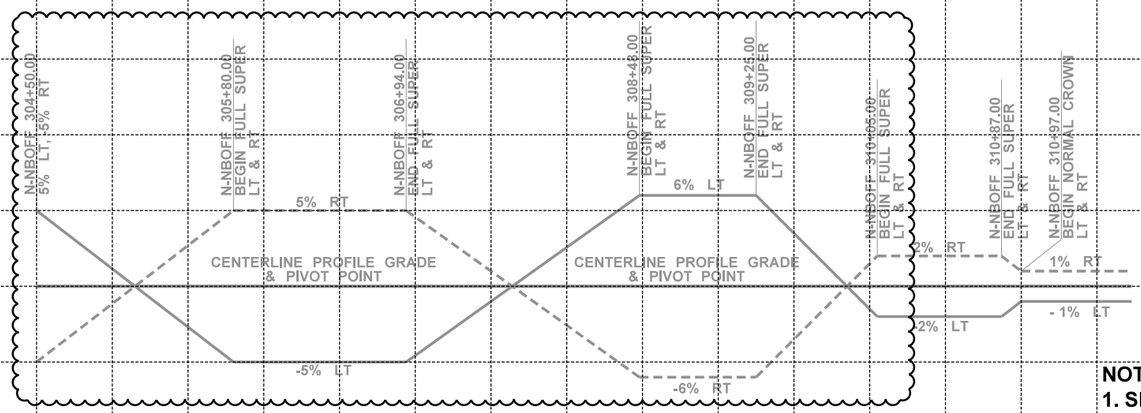

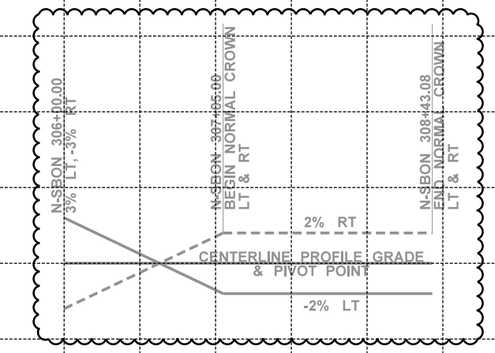

NOTES:

1. SHADED AREAS INDICATE WORK OUTSIDE OF THE DESIGN-BUILD PROJECT LIMITS AND IS SHOWN FOR REFERENCE ONLY.
2. CLOUDED AREAS INDICATE CHANGES MADE TO THE RFP.

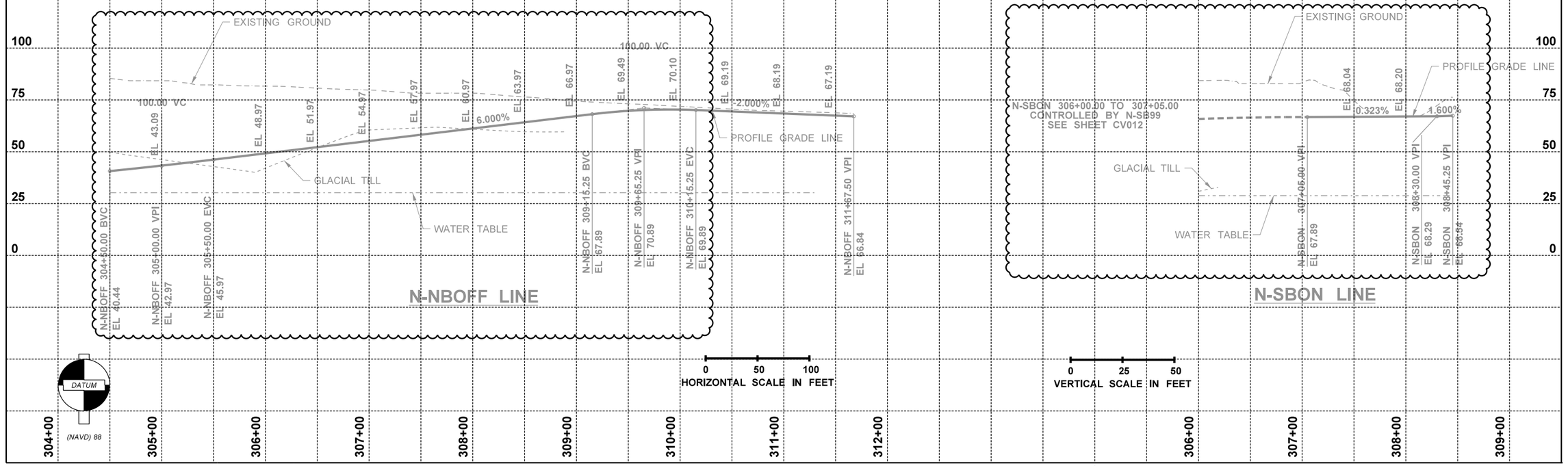

FILE NAME	IP_PWP:dms69910\46055-Txx-14CV018_OptM.DLV				REGION NO.	STATE	FED.AID PROJ.NO.
TIME	20-OCT-2010 11:14				10	WASH	
DATE	20-OCT-2010				JOB NUMBER		
PLOTTED BY	groe						
DESIGNED BY	L. XU				CONTRACT NO.		LOCATION NO.
ENTERED BY	G. ROE						
CHECKED BY	S. RINNERT						
PROJ. ENGR.	S. EVERETT						
REGIONAL ADM.	R. PAANANEN	REVISION	DATE	BY			

STEPHEN P. RINNERT — STATE OF WASHINGTON — 35682 — REGISTERED PROFESSIONAL ENGINEER

RFP DESIGN

SUBMITTED BY
SEATTLE TUNNEL PARTNERS

NOT FOR CONSTRUCTION

Washington State Department of Transportation

U.S. Department of Transportation Federal Highway Administration

City of Seattle

ALASKAN WAY VIADUCT
REPLACEMENT PROJECT
SR 99 BORED TUNNEL
CONTRACT PACKAGE 04

ROADWAY PROFILE & SUPERELEVATION

CV018

SHEET 50 OF 208 SHEETS

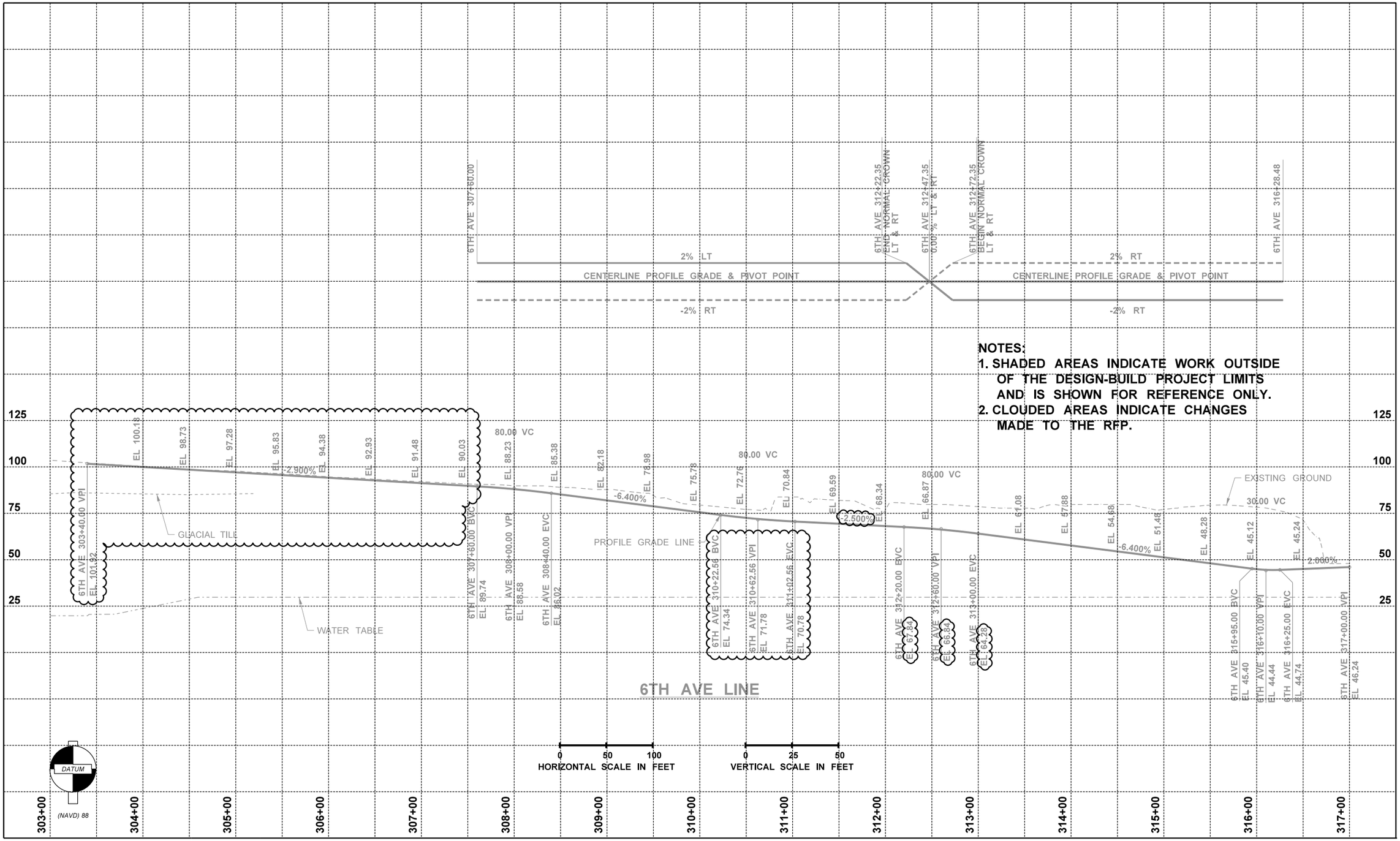

FILE NAME	IP_PWP:dms69910\46055-Txx-14CV019_OptM.DLV				REGION NO.	STATE	FED.AID PROJ.NO.
TIME	20-OCT-2010 11:14				10	WASH	
DATE	20-OCT-2010				JOB NUMBER		
PLOTTED BY	groe						
DESIGNED BY	L. XU				CONTRACT NO.		LOCATION NO.
ENTERED BY	G. ROE						
CHECKED BY	S. RINNERT						
PROJ. ENGR.	S. EVERETT						
REGIONAL ADM.	R. PAANANEN	REVISION	DATE	BY			

STEPHEN P. RINNERT — STATE OF WASHINGTON — 33682 — REGISTERED PROFESSIONAL ENGINEER

RFP DESIGN
SUBMITTED BY
SEATTLE TUNNEL PARTNERS

NOT FOR CONSTRUCTION

Washington State Department of Transportation
U.S. Department of Transportation Federal Highway Administration
City of Seattle

ALASKAN WAY VIADUCT
REPLACEMENT PROJECT
SR 99 BORED TUNNEL
CONTRACT PACKAGE 04

ROADWAY PROFILE & SUPERELEVATION

CV019

SHEET 51 OF 208 SHEETS

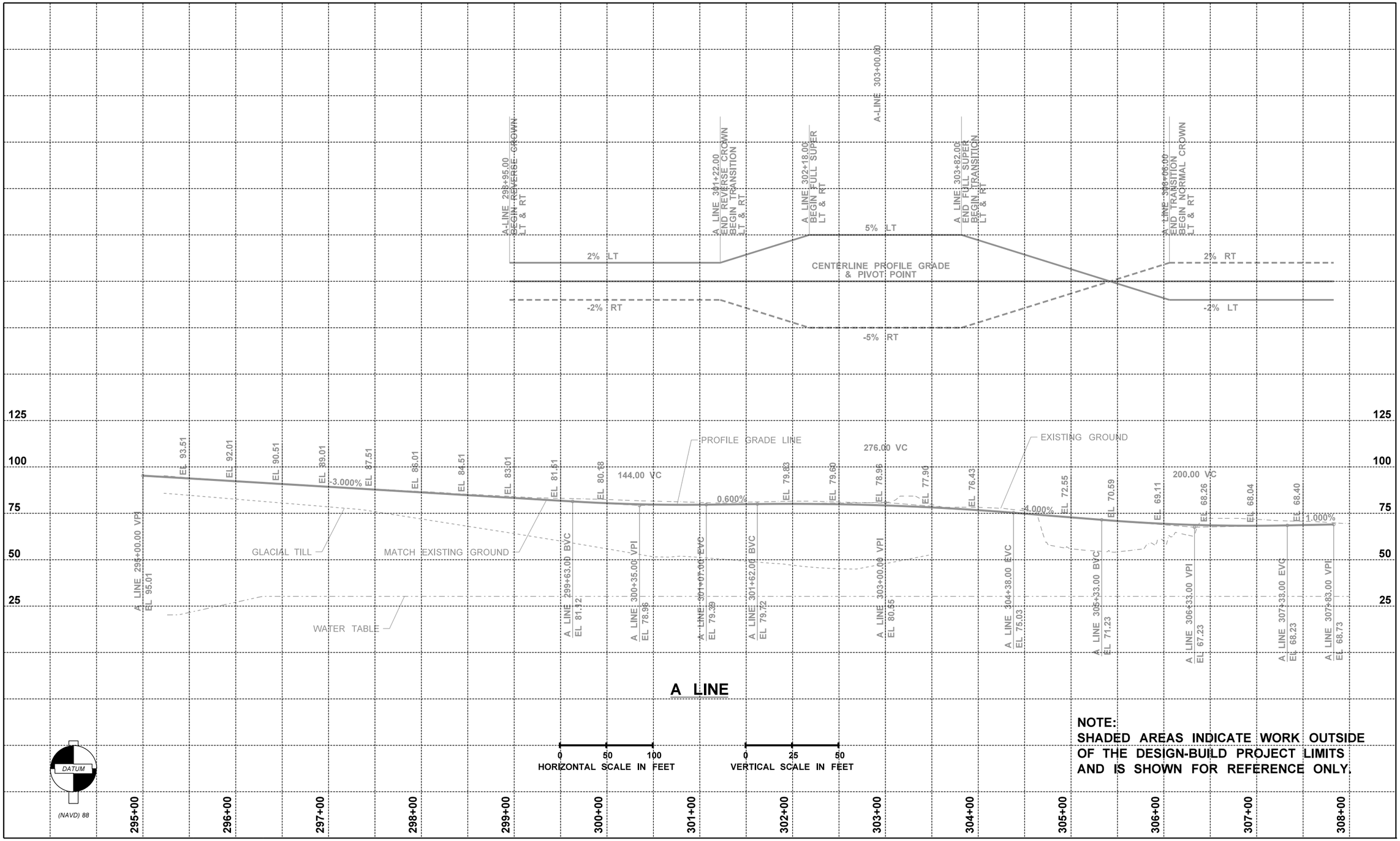

NOTE:
SHADED AREAS INDICATE WORK OUTSIDE OF THE DESIGN-BUILD PROJECT LIMITS AND IS SHOWN FOR REFERENCE ONLY.

FILE NAME	IP_PWP:dms69910\46055-Txx-14CV020_OptM.DLV				REGION NO.	STATE	FED.AID PROJ.NO.
TIME	20-OCT-2010 11:14				10	WASH	
DATE	20-OCT-2010				JOB NUMBER		
PLOTTED BY	groe						
DESIGNED BY	L. XU				CONTRACT NO.		LOCATION NO.
ENTERED BY	G. ROE						
CHECKED BY	S. RINNERT						
PROJ. ENGR.	S. EVERETT						
REGIONAL ADM.	R. PAANANEN	REVISION	DATE	BY			

STEPHEN P. RINNERT
STATE OF WASHINGTON
35682
REGISTERED PROFESSIONAL ENGINEER

RFP DESIGN
SUBMITTED BY
SEATTLE TUNNEL PARTNERS

NOT FOR CONSTRUCTION

Washington State Department of Transportation
U.S. Department of Transportation Federal Highway Administration
City of Seattle

ALASKAN WAY VIADUCT
REPLACEMENT PROJECT
SR 99 BORED TUNNEL
CONTRACT PACKAGE 04

ROADWAY PROFILE & SUPERELEVATION

CV020

SHEET 52 OF 208 SHEETS

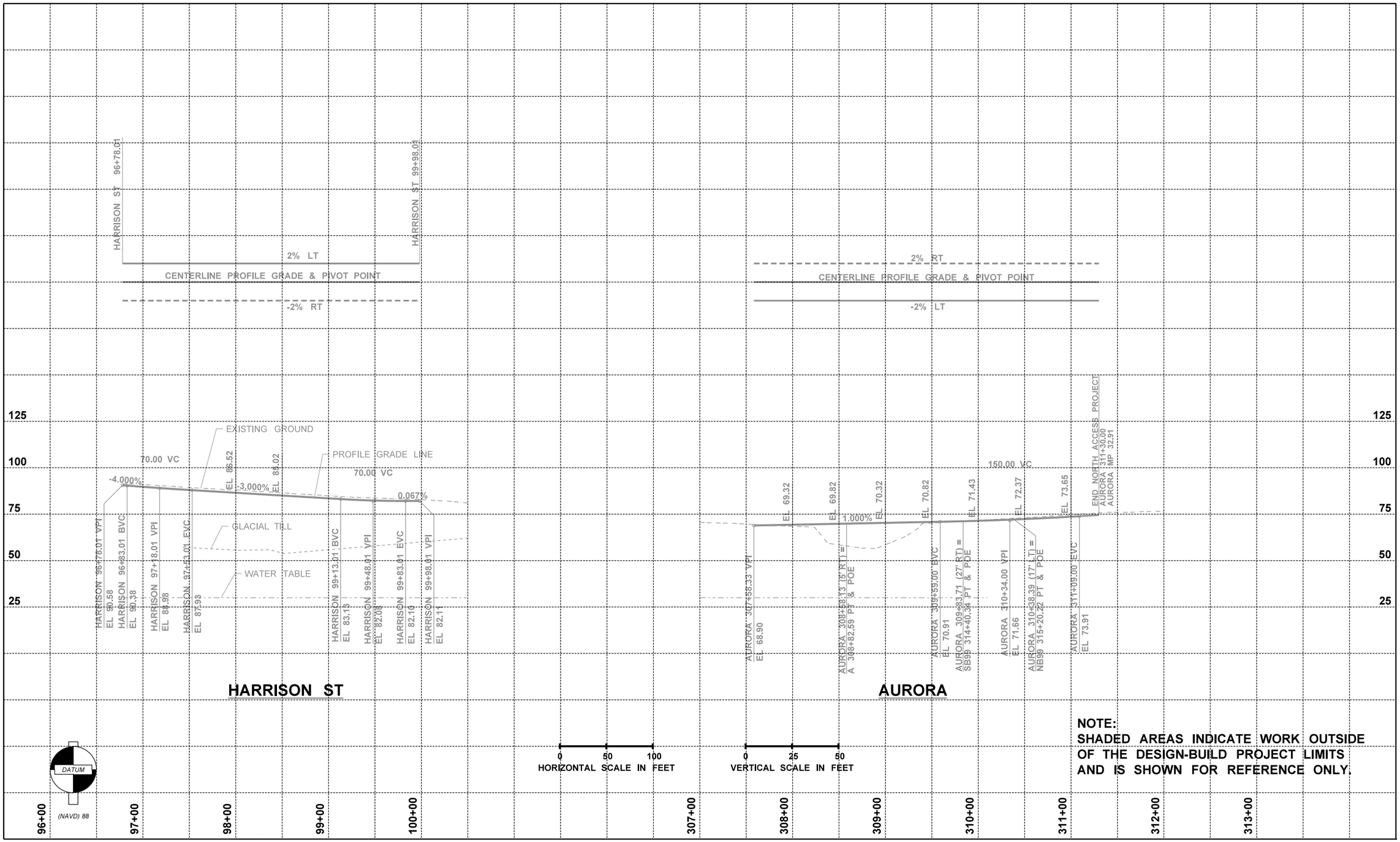

FILE NAME	IP_PWP:dms69910\46055-Txx-14CV021_OptM.DLV
TIME	20-OCT-2010 11:15
DATE	20-OCT-2010
PLOTTED BY	groe
DESIGNED BY	L. XU
ENTERED BY	G. ROE
CHECKED BY	S. RINNERT
PROJ. ENGR.	S. EVERETT
REGIONAL ADM.	R. PAANANEN

REVISION	DATE	BY

REGION NO.	STATE	FED.AID PROJ.NO.
10	WASH	
JOB NUMBER		
CONTRACT NO.		LOCATION NO.

STEPHEN P. RINNERT — STATE OF WASHINGTON — 33683 — REGISTERED PROFESSIONAL ENGINEER

RFP DESIGN
SUBMITTED BY
SEATTLE TUNNEL PARTNERS

NOT FOR CONSTRUCTION

Washington State Department of Transportation
U.S. Department of Transportation Federal Highway Administration
City of Seattle

ALASKAN WAY VIADUCT
REPLACEMENT PROJECT
SR 99 BORED TUNNEL
CONTRACT PACKAGE 04

ROADWAY PROFILE & SUPERELEVATION

CV021

SHEET 53 OF 208 SHEETS

LEGEND

- EXISTING STORM OR COMBINED SEWER SYSTEM
- MH / CB — ADJACENT CONTRACT DRAINAGE
- MH / CB — STORMWATER PUMPED SYSTEM
- MH ST / CB ST — STORMWATER GRAVITY SYSTEM

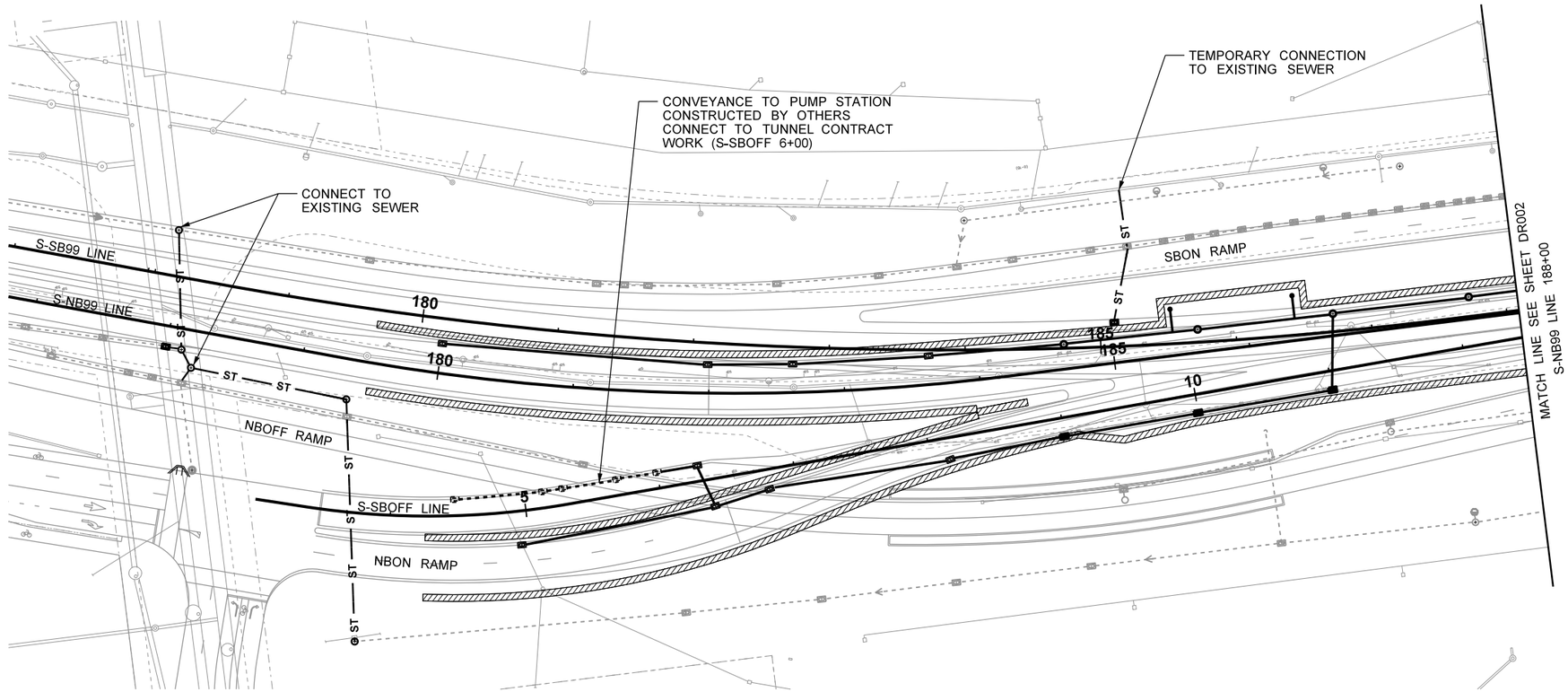

0 50 100
SCALE IN FEET

FILE NAME	IP_PWP:dms69910\46055-Txx-14DR001_OptM.DLV				REGION NO.	STATE	FED.AID PROJ.NO.
TIME	21-OCT-2010 14:17				10	WASH	
DATE	21-OCT-2010				JOB NUMBER		
PLOTTED BY	groe						
DESIGNED BY	A. BLACK				CONTRACT NO.		LOCATION NO.
ENTERED BY	R. GREENLEE						
CHECKED BY	A. BLACK						
PROJ. ENGR.	S. EVERETT						
REGIONAL ADM.	R. PAANANEN	REVISION	DATE	BY			

ALAN D. BLACK — STATE OF WASHINGTON — 31945 — REGISTERED PROFESSIONAL ENGINEER

RFP DESIGN
SUBMITTED BY
SEATTLE TUNNEL PARTNERS

NOT FOR CONSTRUCTION

Washington State Department of Transportation
U.S. Department of Transportation Federal Highway Administration
City of Seattle

ALASKAN WAY VIADUCT
REPLACEMENT PROJECT
SR 99 BORED TUNNEL
CONTRACT PACKAGE 14

SOUTH ACCESS AREA
DRAINAGE SYSTEM

DR001

SHEET 54 OF 208 SHEETS

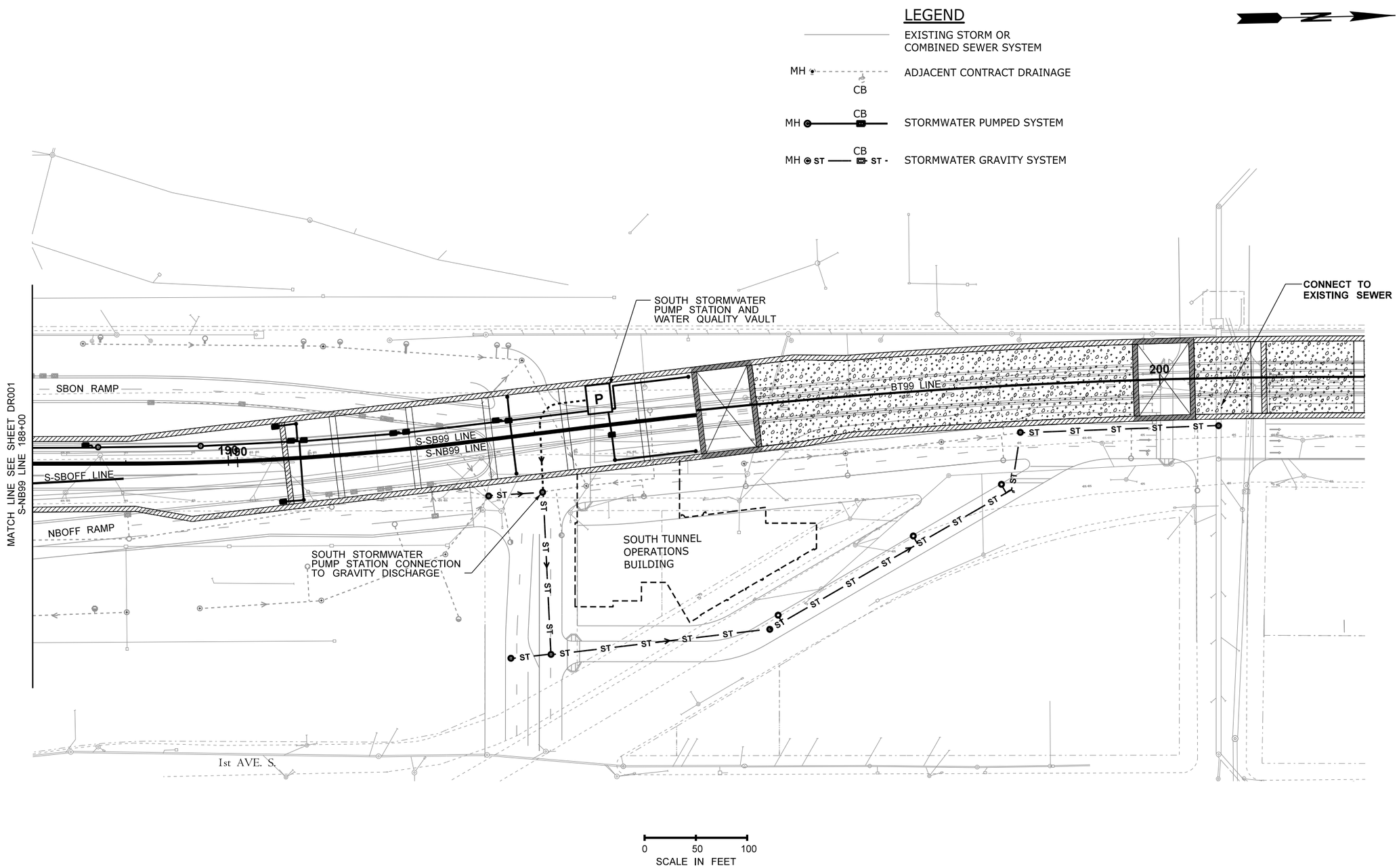

FILE NAME	IP_PWP:dms69910\46055-Txx-14DR002_OptM.DVL				REGION NO.	STATE	FED.AID PROJ.NO.
TIME	20-OCT-2010 11:15				10	WASH	
DATE	20-OCT-2010				JOB NUMBER		
PLOTTED BY	groe						
DESIGNED BY	A. BLACK				CONTRACT NO.		LOCATION NO.
ENTERED BY	R. GREENLEE						
CHECKED BY	B. BLACK						
PROJ. ENGR.	S. EVERETT						
REGIONAL ADM.	R. PAANANEN	REVISION	DATE	BY			

ALAN D. BLACK — STATE OF WASHINGTON — 31942 — REGISTERED PROFESSIONAL ENGINEER

RFP DESIGN

SUBMITTED BY SEATTLE TUNNEL PARTNERS

NOT FOR CONSTRUCTION

Washington State Department of Transportation

U.S. Department of Transportation Federal Highway Administration

City of Seattle

ALASKAN WAY VIADUCT REPLACEMENT PROJECT
SR 99 BORED TUNNEL
CONTRACT PACKAGE 14

SOUTH ACCESS AREA DRAINAGE SYSTEM

DR002

SHEET 55 OF 208 SHEETS

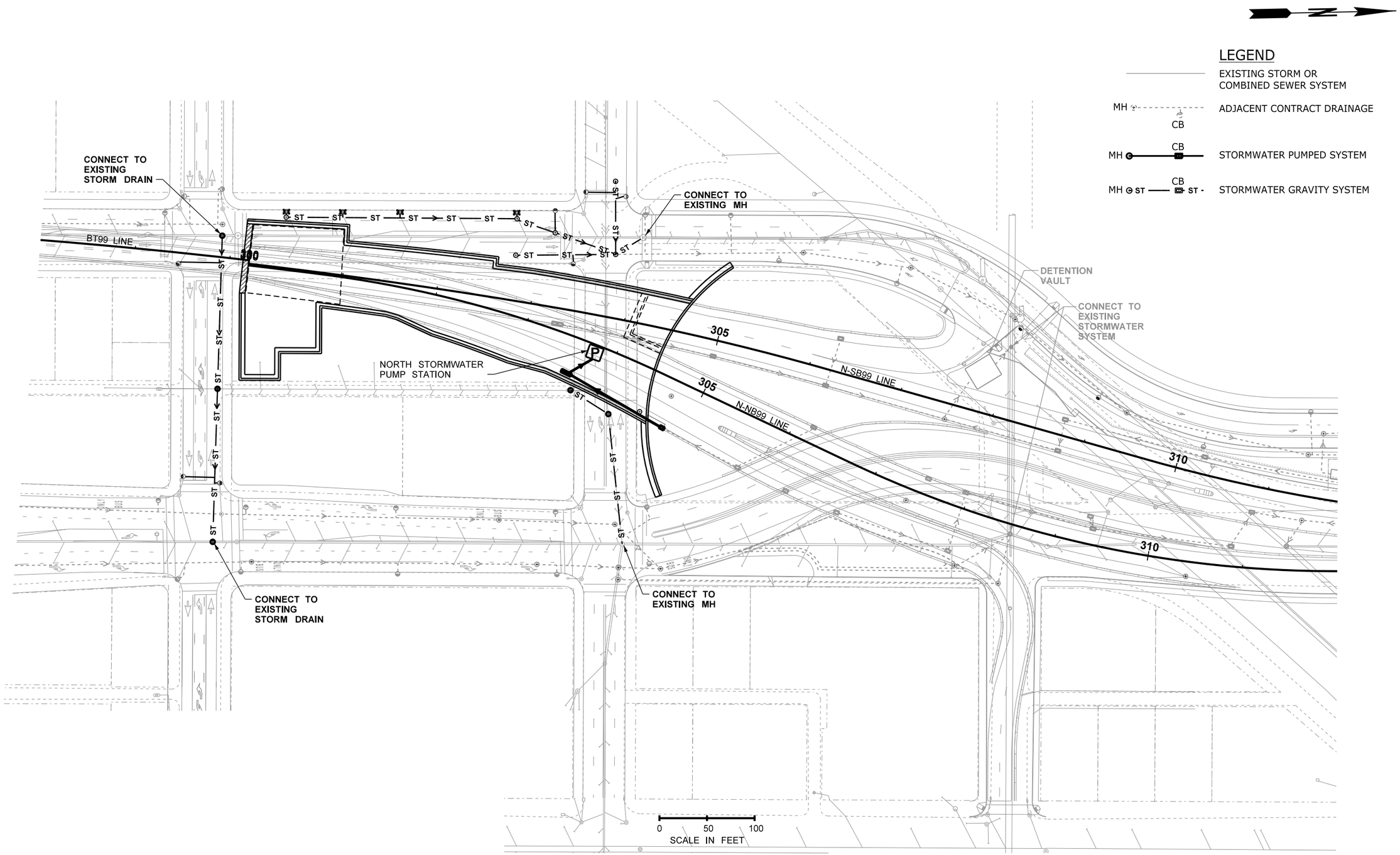

FILE NAME	IP_PWP:dms69910\46055-Txx-14DR003_OptM.DVL						
TIME	20-OCT-2010 11:16				REGION NO. 10	STATE WASH	FED.AID PROJ.NO.
DATE	20-OCT-2010						
PLOTTED BY	groe				JOB NUMBER		
DESIGNED BY	A. BLACK						
ENTERED BY	R. GREENLEE						
CHECKED BY	A. BLACK				CONTRACT NO.		LOCATION NO.
PROJ. ENGR.	S. EVERETT						
REGIONAL ADM.	R. PAANANEN	REVISION	DATE	BY			

ALAN D. BLACK — STATE OF WASHINGTON — 31948 — REGISTERED PROFESSIONAL ENGINEER

RFP DESIGN
SUBMITTED BY
SEATTLE TUNNEL PARTNERS

NOT FOR CONSTRUCTION

Washington State Department of Transportation
U.S. Department of Transportation Federal Highway Administration
City of Seattle

ALASKAN WAY VIADUCT REPLACEMENT PROJECT
SR 99 BORED TUNNEL
CONTRACT PACKAGE 14

NORTH ACCESS AREA DRAINAGE SYSTEM

DR003

SHEET 56 OF 208 SHEETS

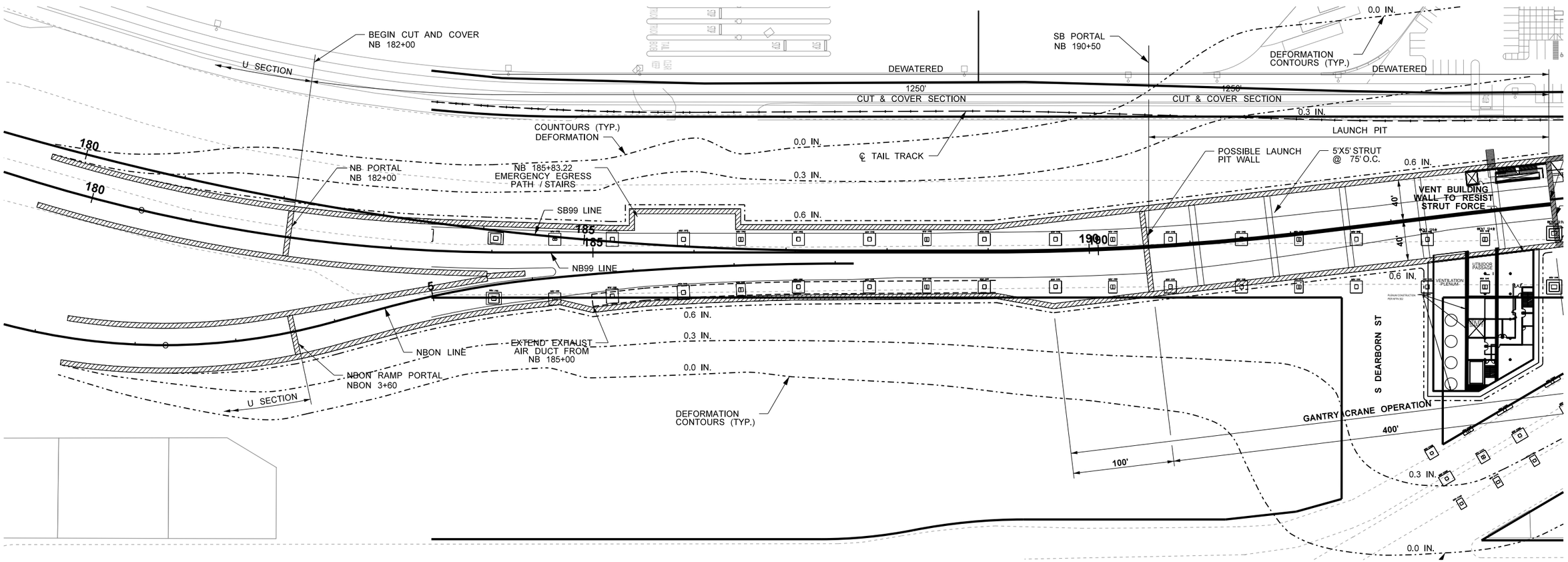

LEGEND

HORIZONTAL AND VERTICAL GROUND DEFORMATION CONTOURS.

0 50 100
SCALE IN FEET

FILE NAME	IP_PWP:dms69908\46055-Txx-14SD001.DLV						
TIME	21-OCT-2010 09:57				REGION NO.	STATE	FED.AID PROJ.NO.
DATE	21-OCT-2010				10	WASH	
PLOTTED BY	groe				JOB NUMBER		
DESIGNED BY	G. DORN						
ENTERED BY	D. NORMAN				CONTRACT NO.		LOCATION NO.
CHECKED BY	S. BURCH						
PROJ. ENGR.	S. EVERETT						
REGIONAL ADM.	R. PAANANEN	REVISION	DATE	BY			

GERALD L. DORN STATE OF WASHINGTON 21429 STRUCTURAL ENGINEER PROFESSIONAL ENGINEER

RFP DESIGN
SUBMITTED BY
SEATTLE TUNNEL PARTNERS

NOT FOR CONSTRUCTION

Washington State Department of Transportation
U.S. Department of Transportation Federal Highway Administration
City of Seattle

ALASKAN WAY VIADUCT
REPLACEMENT PROJECT
SR 99 BORED TUNNEL
CONTRACT PACKAGE 14

SOUTH SHORING PLAN

SD001

SHEET 57 OF 208 SHEETS

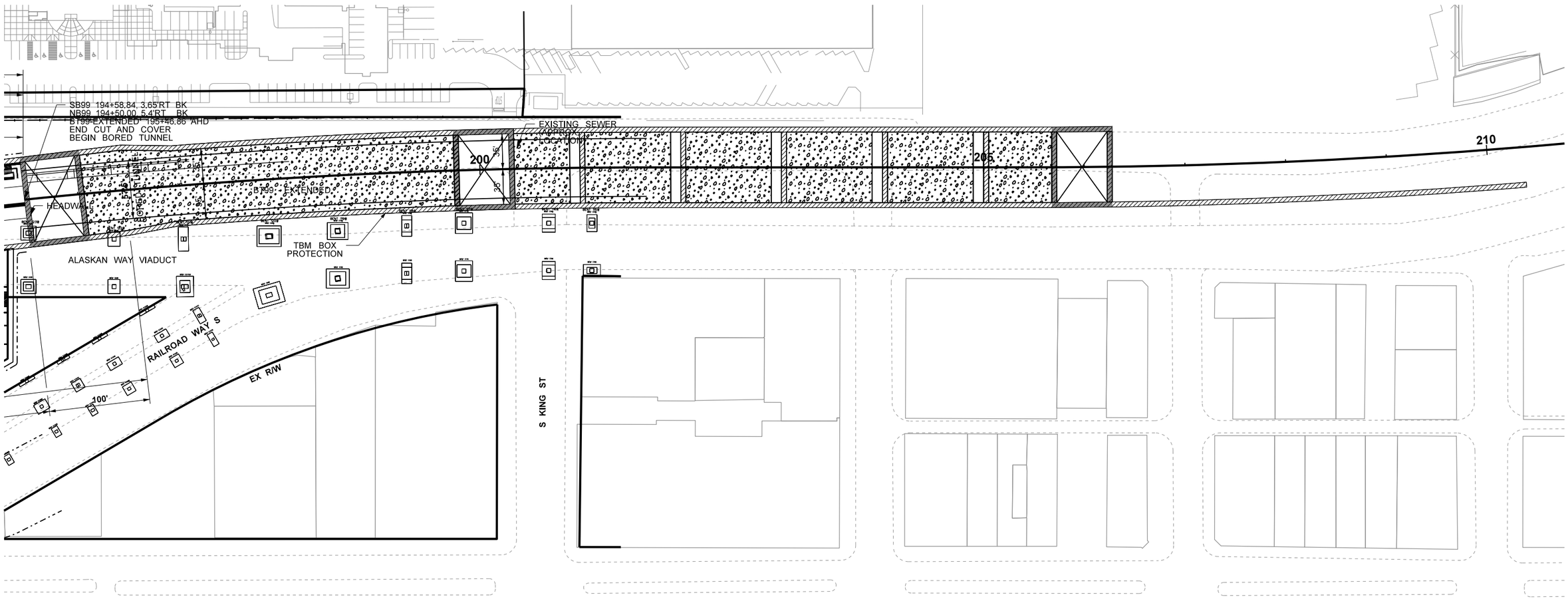

0 50 100
SCALE IN FEET

FILE NAME	IP_PWP:dms69908\46055-Txx-14SD001.DLV						
TIME	21-OCT-2010 09:57				REGION NO. 10	STATE WASH	FED.AID PROJ.NO.
DATE	21-OCT-2010						
PLOTTED BY	groe				JOB NUMBER		
DESIGNED BY	G. DORN						
ENTERED BY	D. NORMAN						
CHECKED BY	S. BURCH				CONTRACT NO.		LOCATION NO.
PROJ. ENGR.	S. EVERETT						
REGIONAL ADM.	R. PAANANEN	REVISION	DATE	BY			

GERALD L. DORN
STATE OF WASHINGTON
21429
STRUCTURAL ENGINEER
PROFESSIONAL ENGINEER

RFP DESIGN
SUBMITTED BY
SEATTLE TUNNEL PARTNERS

NOT FOR CONSTRUCTION

Washington State Department of Transportation
U.S. Department of Transportation Federal Highway Administration
City of Seattle

ALASKAN WAY VIADUCT
REPLACEMENT PROJECT
SR 99 BORED TUNNEL
CONTRACT PACKAGE 14

SOUTH SHORING PLAN

SD002

SHEET 58 OF 208 SHEETS

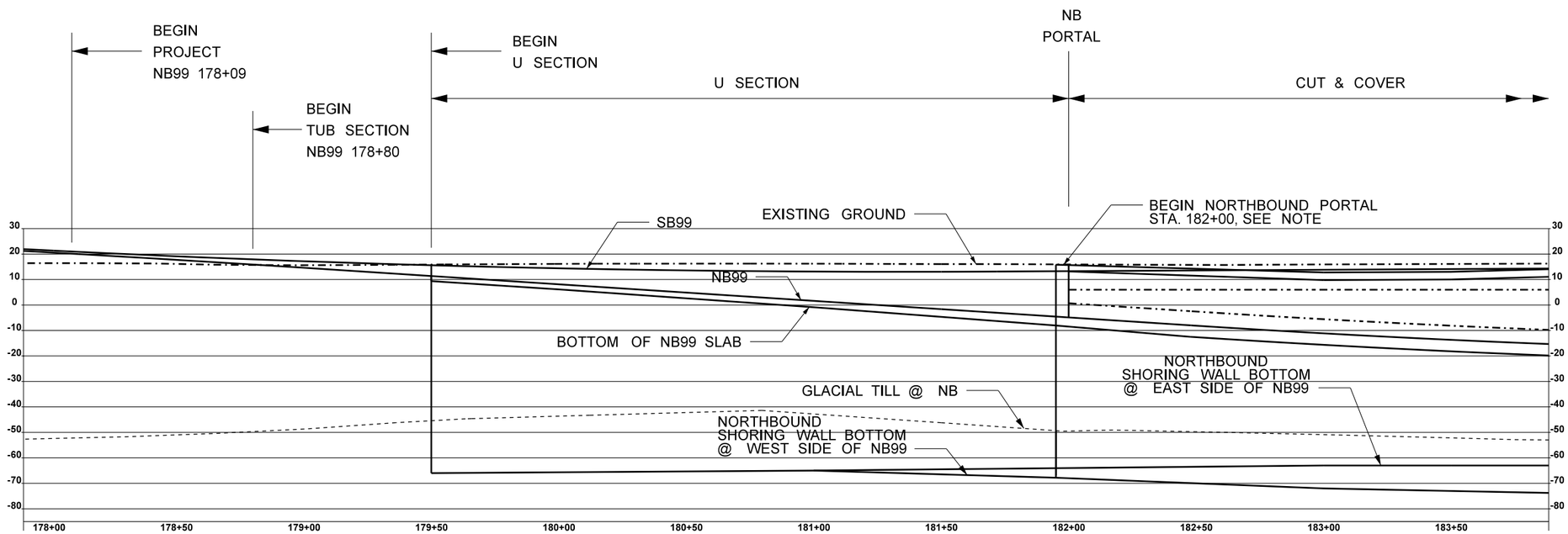

NOTE:
TOP OF NORTHBOUND AND SOUTHBOUND SHORING WALLS ARE AT EXISTING GROUND.

EXISTING GROUND

GLACIAL TILL

SLAB BOTTOM/TOP

SHORING WALL

0 50 100
SCALE IN FEET

FILE NAME	IP_PWP:dms69908\46055-Txx-14SD003.DLV
TIME	21-OCT-2010 09:57
DATE	21-OCT-2010
PLOTTED BY	groe
DESIGNED BY	G. DORN
ENTERED BY	D. NORMAN
CHECKED BY	S. BURCH
PROJ. ENGR.	S. EVERETT
REGIONAL ADM.	R. PAANANEN

REVISION	DATE	BY

REGION NO.	STATE	FED.AID PROJ.NO.
10	WASH	
JOB NUMBER		
CONTRACT NO.		LOCATION NO.

GERALD L. DORN
STATE OF WASHINGTON
21429
REGISTERED PROFESSIONAL ENGINEER

RFP DESIGN
SUBMITTED BY
SEATTLE TUNNEL PARTNERS

NOT FOR CONSTRUCTION

Washington State Department of Transportation
U.S. Department of Transportation Federal Highway Administration
City of Seattle

ALASKAN WAY VIADUCT
REPLACEMENT PROJECT
SR 99 BORED TUNNEL
CONTRACT PACKAGE 14

SOUTH LONGITUDINAL SECTION 1

SD003

SHEET 59 OF 208 SHEETS

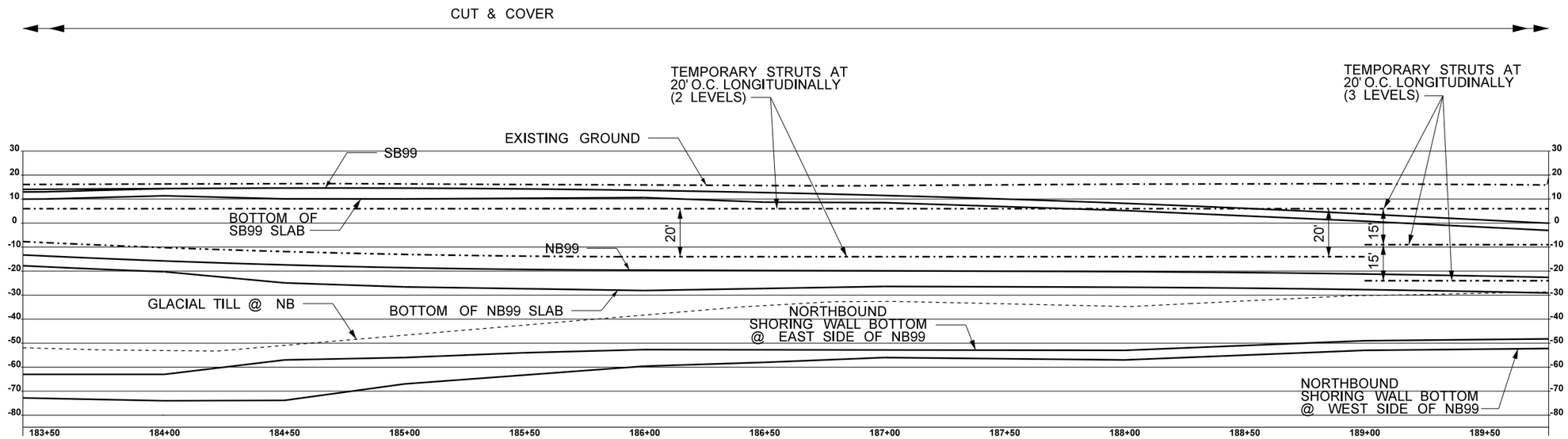

NOTE:
SEE STRUT DETAIL SKETCH
FOR SIZING INFORMATION.

EXISTING GROUND

GLACIAL TILL

SLAB BOTTOM/TOP

SHORING WALL

0 50 100
SCALE IN FEET

FILE NAME	IP_PWP:dms69908\46055-Txx-14SD003.DLV
TIME	21-OCT-2010 09:58
DATE	21-OCT-2010
PLOTTED BY	groe
DESIGNED BY	G. DORN
ENTERED BY	D. NORMAN
CHECKED BY	S. BURCH
PROJ. ENGR.	S. EVERETT
REGIONAL ADM.	R. PAANANEN

REVISION	DATE	BY

REGION NO.	STATE	FED.AID PROJ.NO.
10	WASH	
JOB NUMBER		
CONTRACT NO.		LOCATION NO.

GERALD L. DORN
STATE OF WASHINGTON
21429
REGISTERED PROFESSIONAL ENGINEER

RFP DESIGN
SUBMITTED BY
SEATTLE TUNNEL PARTNERS

NOT FOR CONSTRUCTION

Washington State Department of Transportation
U.S. Department of Transportation Federal Highway Administration
City of Seattle

ALASKAN WAY VIADUCT
REPLACEMENT PROJECT
SR 99 BORED TUNNEL
CONTRACT PACKAGE 14

SOUTH LONGITUDINAL SECTION 2

SD004

SHEET 60 OF 208 SHEETS

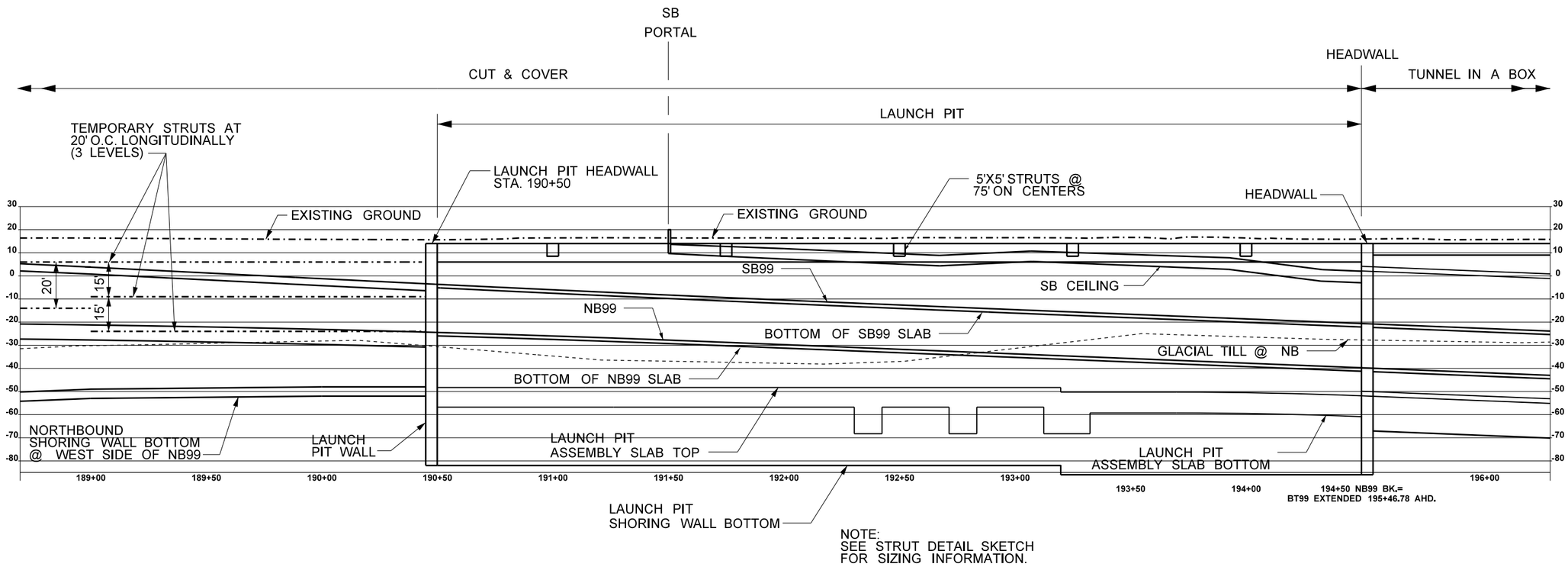

NOTE:
SEE STRUT DETAIL SKETCH
FOR SIZING INFORMATION.

EXISTING GROUND

GLACIAL TILL

SLAB BOTTOM/TOP

SHORING WALL

0 50 100
SCALE IN FEET

FILE NAME	IP_PWP:dms69908\46055-Txx-14SD003.DLV						
TIME	21-OCT-2010 09:58				REGION NO. 10	STATE WASH	FED.AID PROJ.NO.
DATE	21-OCT-2010						
PLOTTED BY	groe				JOB NUMBER		
DESIGNED BY	G. DORN						
ENTERED BY	D. NORMAN						
CHECKED BY	S. BURCH				CONTRACT NO.		LOCATION NO.
PROJ. ENGR.	S. EVERETT						
REGIONAL ADM.	R. PAANANEN	REVISION	DATE	BY			

GERALD L. DORN STATE OF WASHINGTON 21429 REGISTERED PROFESSIONAL ENGINEER

RFP DESIGN
SUBMITTED BY
SEATTLE TUNNEL PARTNERS

NOT FOR CONSTRUCTION

Washington State Department of Transportation
U.S. Department of Transportation Federal Highway Administration
City of Seattle

ALASKAN WAY VIADUCT
REPLACEMENT PROJECT
SR 99 BORED TUNNEL
CONTRACT PACKAGE 14

SOUTH LONGITUDINAL SECTION 3

SD005

SHEET 61 OF 208 SHEETS

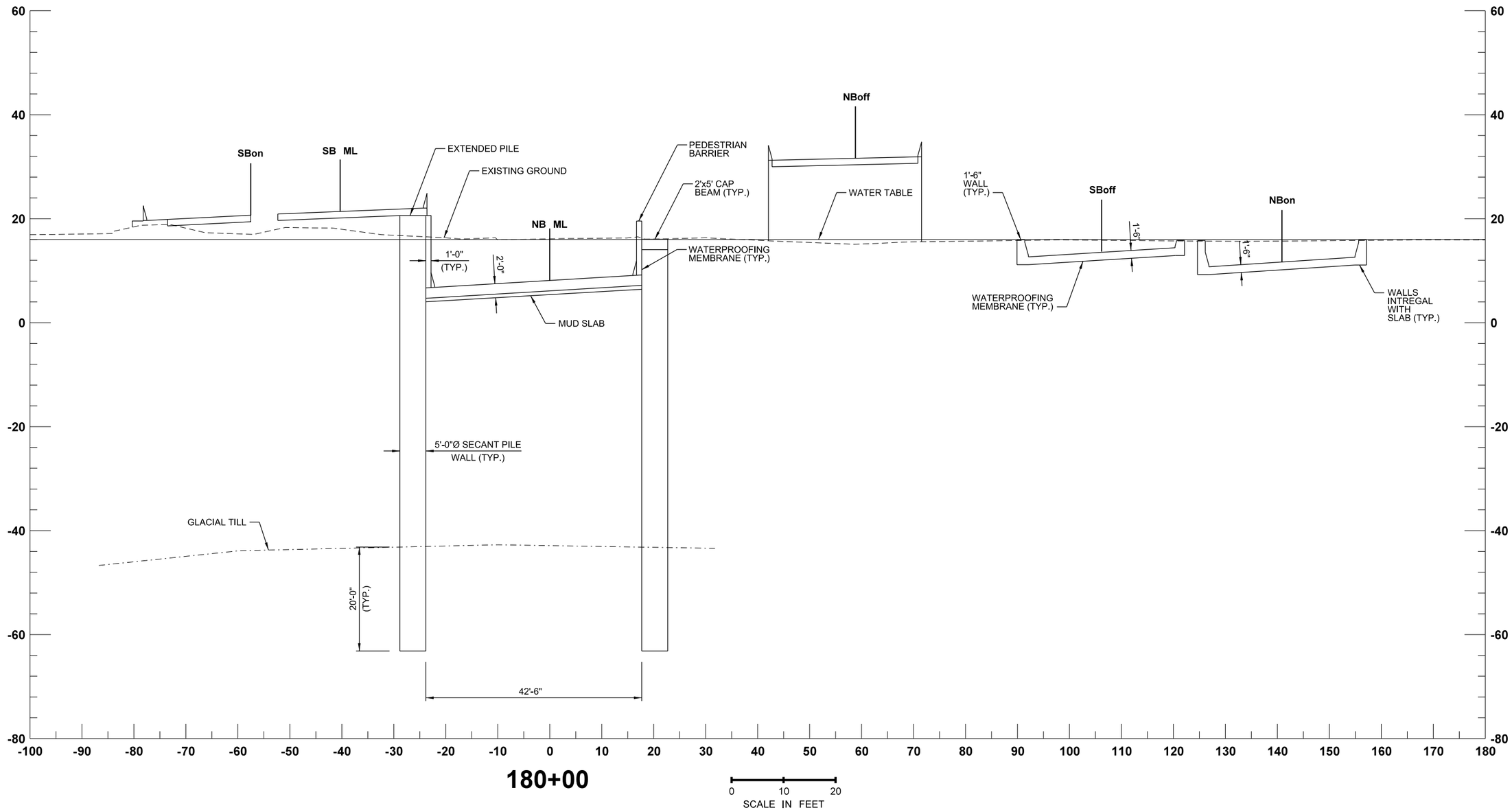

FILE NAME	IP_PWP:dms69908\46055-Txx-14SD006.DLV						
TIME	21-OCT-2010 09:58				REGION NO. 10	STATE WASH	FED.AID PROJ.NO.
DATE	21-OCT-2010						
PLOTTED BY	groe				JOB NUMBER		
DESIGNED BY	G. DORN						
ENTERED BY	D. NORMAN						
CHECKED BY	S. EADS				CONTRACT NO.		LOCATION NO.
PROJ. ENGR.	S. EVERETT						
REGIONAL ADM.	R. PAANANEN	REVISION	DATE	BY			

GERALD L. DORN STATE OF WASHINGTON 21429 REGISTERED PROFESSIONAL ENGINEER

RFP DESIGN
SUBMITTED BY
SEATTLE TUNNEL PARTNERS

NOT FOR CONSTRUCTION

Washington State Department of Transportation
U.S. Department of Transportation Federal Highway Administration
City of Seattle

ALASKAN WAY VIADUCT
REPLACEMENT PROJECT
SR 99 BORED TUNNEL
CONTRACT PACKAGE 14

SOUTH SECTION STATION 180+00

SD006

SHEET 62 OF 208 SHEETS

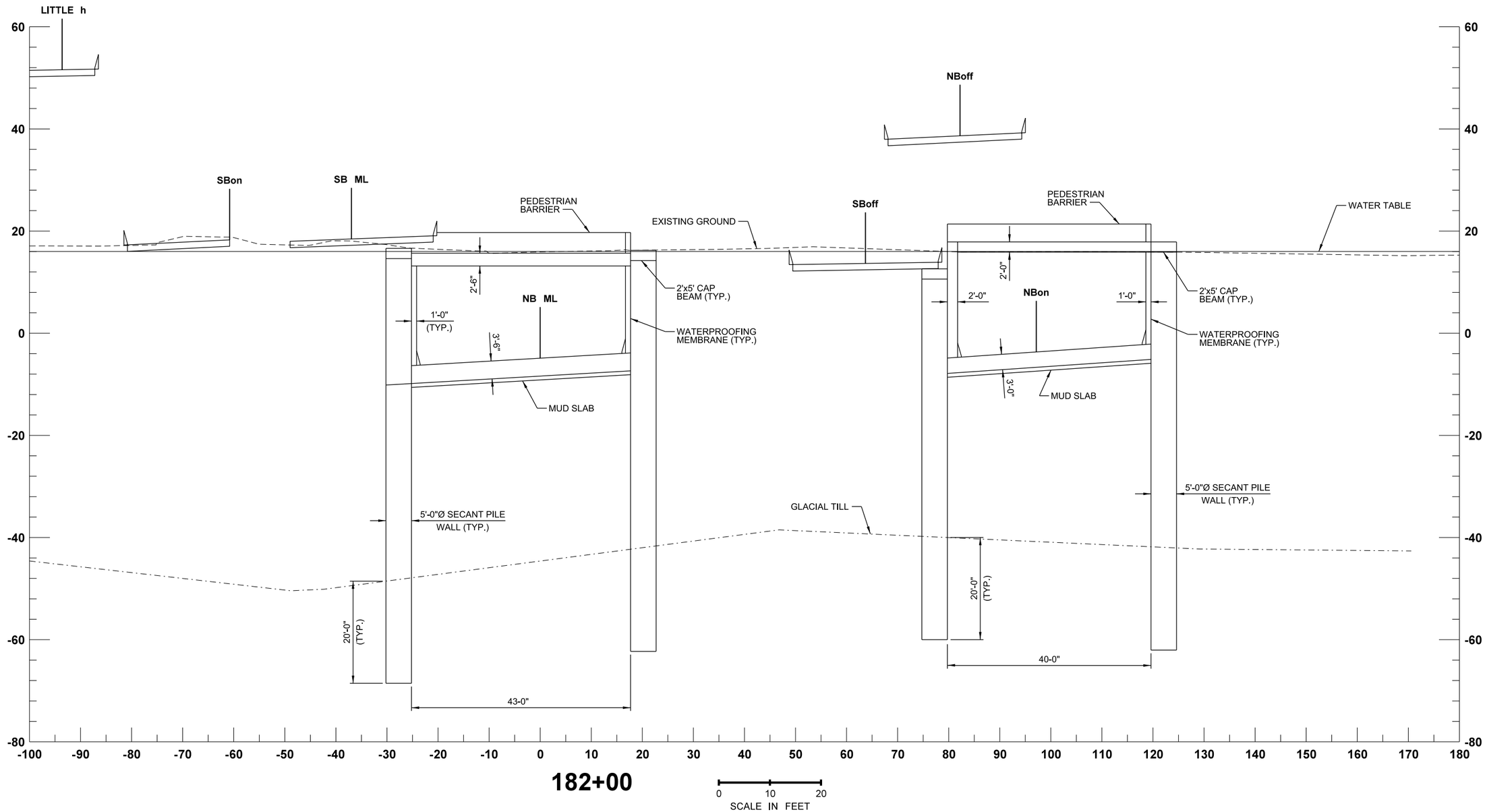

FILE NAME	IP_PWP:dms69908\46055-Txx-14SD007.DLV
TIME	21-OCT-2010 09:58
DATE	21-OCT-2010
PLOTTED BY	groe
DESIGNED BY	G. DORN
ENTERED BY	J. RODRIGUEZ
CHECKED BY	S. EADS
PROJ. ENGR.	S. EVERETT
REGIONAL ADM.	R. PAANANEN

REVISION	DATE	BY

REGION NO.	STATE	FED.AID PROJ.NO.
10	WASH	
JOB NUMBER		
CONTRACT NO.		LOCATION NO.

RFP DESIGN
SUBMITTED BY
SEATTLE TUNNEL PARTNERS

NOT FOR CONSTRUCTION

Washington State Department of Transportation
U.S. Department of Transportation Federal Highway Administration
City of Seattle

ALASKAN WAY VIADUCT
REPLACEMENT PROJECT
SR 99 BORED TUNNEL
CONTRACT PACKAGE 14

SOUTH SECTION STATION 182+00

SD007

SHEET 63 OF 208 SHEETS

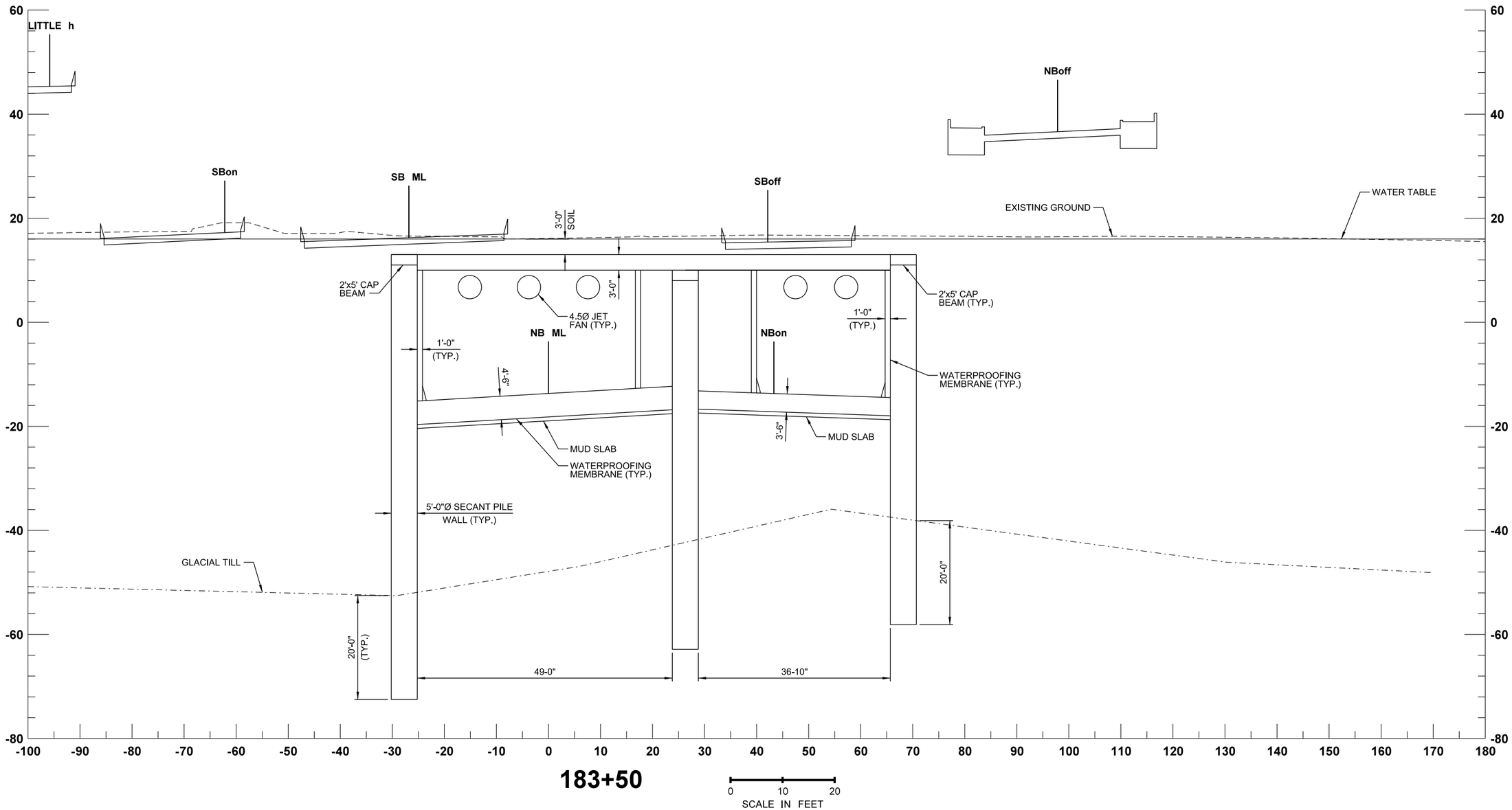

183+50

0 10 20
SCALE IN FEET

FILE NAME	IP_PWP:dms69908\46055-Txx-14SD009.DLV
TIME	21-OCT-2010 09:59
DATE	21-OCT-2010
PLOTTED BY	groe
DESIGNED BY	G. DORN
ENTERED BY	J. RODRIGUEZ
CHECKED BY	S. EADS
PROJ. ENGR.	S. EVERETT
REGIONAL ADM.	R. PAANANEN

REVISION	DATE	BY

REGION NO.	STATE	FED.AID PROJ.NO.
10	WASH	
JOB NUMBER		
CONTRACT NO.		LOCATION NO.

GERALD L. DORN
STATE OF WASHINGTON
21429
REGISTERED PROFESSIONAL ENGINEER

RFP DESIGN
SUBMITTED BY
SEATTLE TUNNEL PARTNERS

NOT FOR CONSTRUCTION

Washington State Department of Transportation
U.S. Department of Transportation Federal Highway Administration
City of Seattle

ALASKAN WAY VIADUCT
REPLACEMENT PROJECT
SR 99 BORED TUNNEL
CONTRACT PACKAGE 14

SOUTH SECTION STATION 183+50

SD009

SHEET 64 OF 208 SHEETS

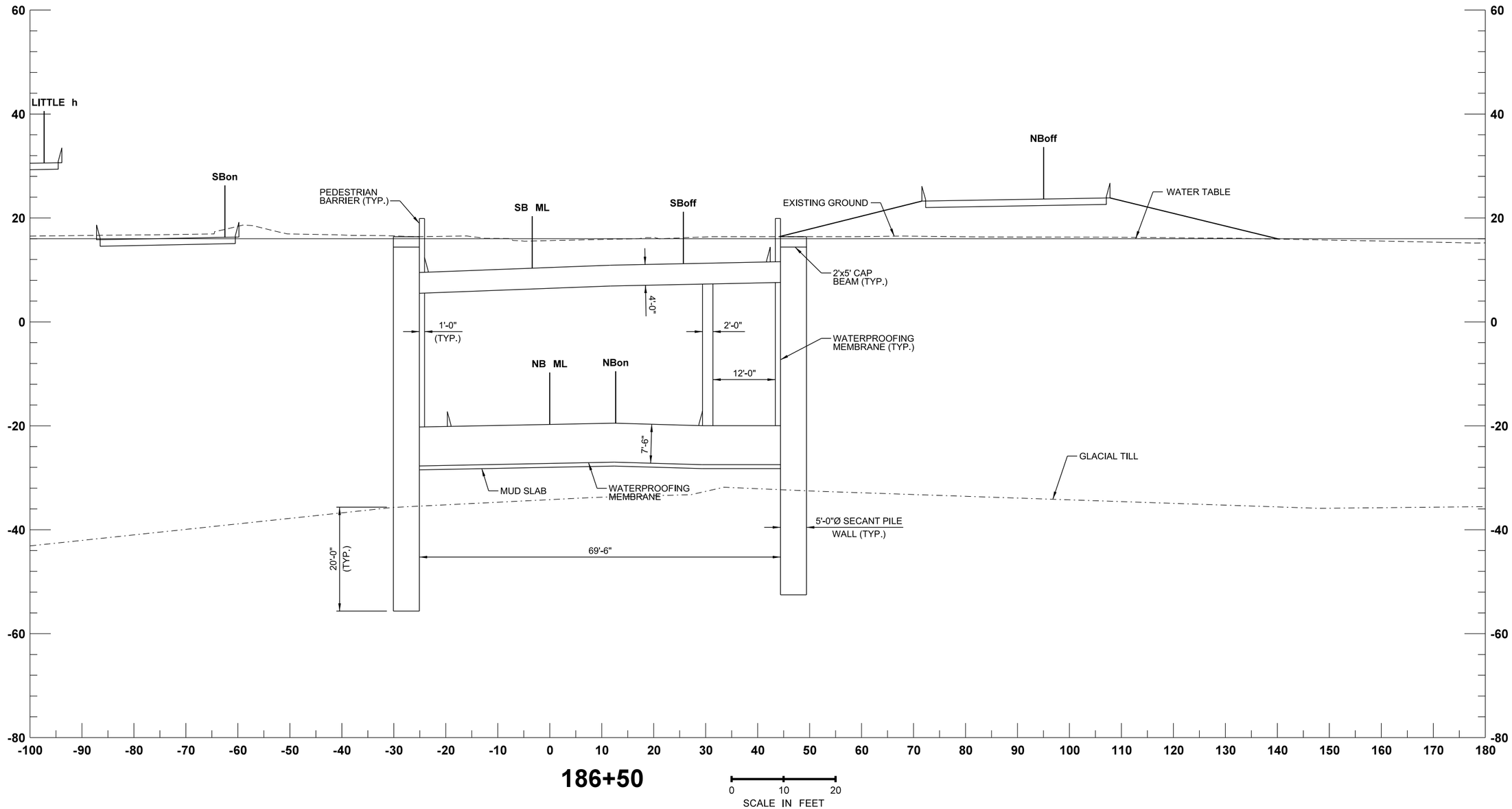

FILE NAME	IP_PWP:dms69908\46055-Txx-14SD014.DLV						
TIME	21-OCT-2010 09:59				REGION NO. 10	STATE WASH	FED.AID PROJ.NO.
DATE	21-OCT-2010				JOB NUMBER		
PLOTTED BY	groe						
DESIGNED BY	G. DORN						
ENTERED BY	J. RODRIGUEZ				CONTRACT NO.		LOCATION NO.
CHECKED BY	S. EADS						
PROJ. ENGR.	S. EVERETT						
REGIONAL ADM.	R. PAANANEN	REVISION	DATE	BY			

GERALD L. DORN STATE OF WASHINGTON 21129 STRUCTURAL ENGINEER PROFESSIONAL ENGINEER

RFP DESIGN
SUBMITTED BY
SEATTLE TUNNEL PARTNERS

NOT FOR CONSTRUCTION

Washington State Department of Transportation
U.S. Department of Transportation Federal Highway Administration
City of Seattle

ALASKAN WAY VIADUCT
REPLACEMENT PROJECT
SR 99 BORED TUNNEL
CONTRACT PACKAGE 14

SOUTH SECTION STATION 186+50

SD014

SHEET 65 OF 208 SHEETS

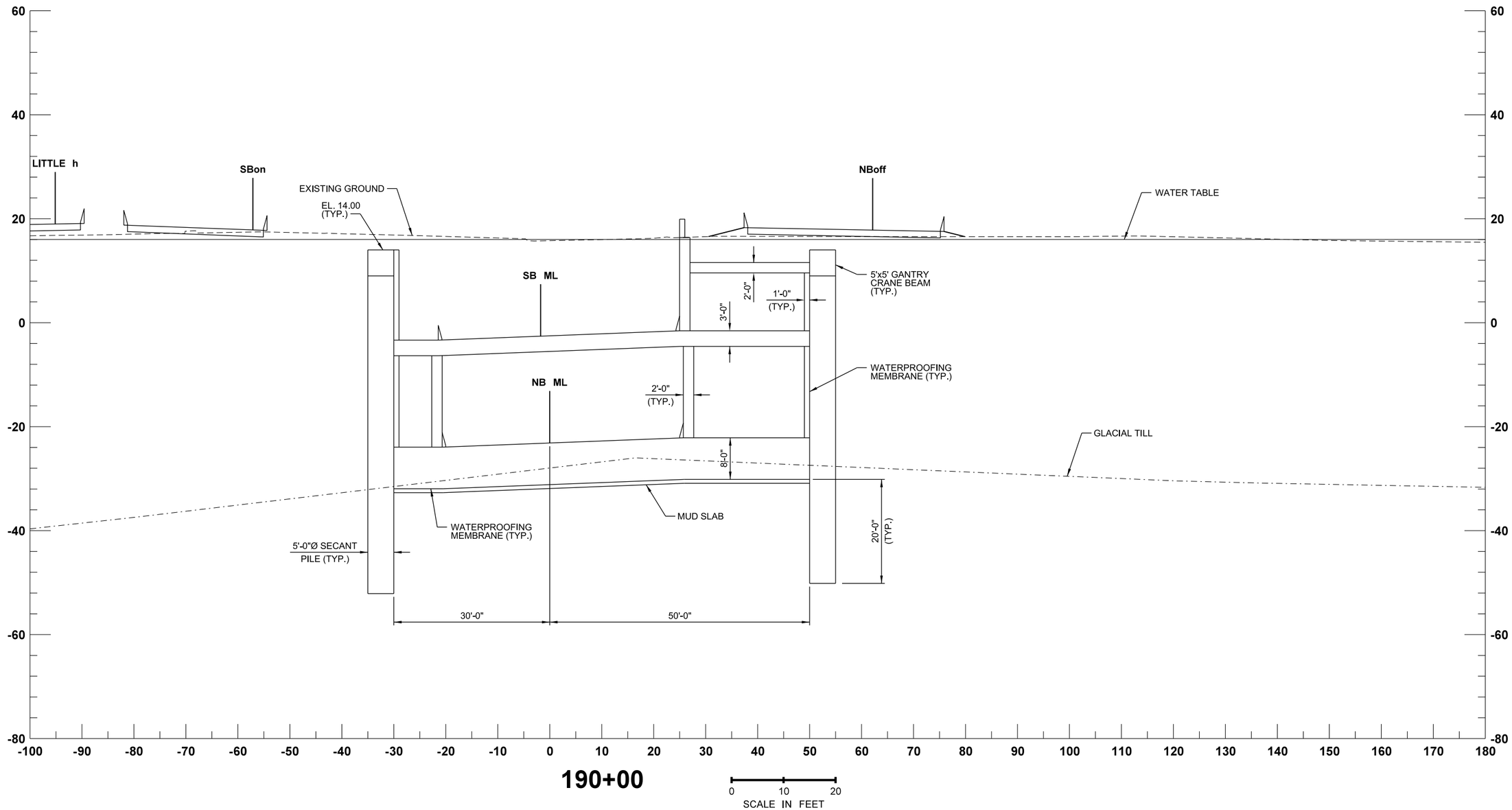

FILE NAME	IP_PWP:dms69908\46055-Txx-14SD018.DLV						
TIME	21-OCT-2010 09:59				REGION NO. 10	STATE WASH	FED.AID PROJ.NO.
DATE	21-OCT-2010				JOB NUMBER		
PLOTTED BY	groe						
DESIGNED BY	G. DORN						
ENTERED BY	J. RODRIGUEZ				CONTRACT NO.		LOCATION NO.
CHECKED BY	S. EADS						
PROJ. ENGR.	S. EVERETT						
REGIONAL ADM.	R. PAANANEN	REVISION	DATE	BY			

GERALD L. DORN
STATE OF WASHINGTON
21129
STRUCTURAL ENGINEER
PROFESSIONAL ENGINEER

RFP DESIGN
SUBMITTED BY
SEATTLE TUNNEL PARTNERS

NOT FOR CONSTRUCTION

Washington State Department of Transportation
U.S. Department of Transportation
Federal Highway Administration
City of Seattle

ALASKAN WAY VIADUCT
REPLACEMENT PROJECT
SR 99 BORED TUNNEL
CONTRACT PACKAGE 14

SOUTH SECTION STATION 190+00

SD018

SHEET 66 OF 208 SHEETS

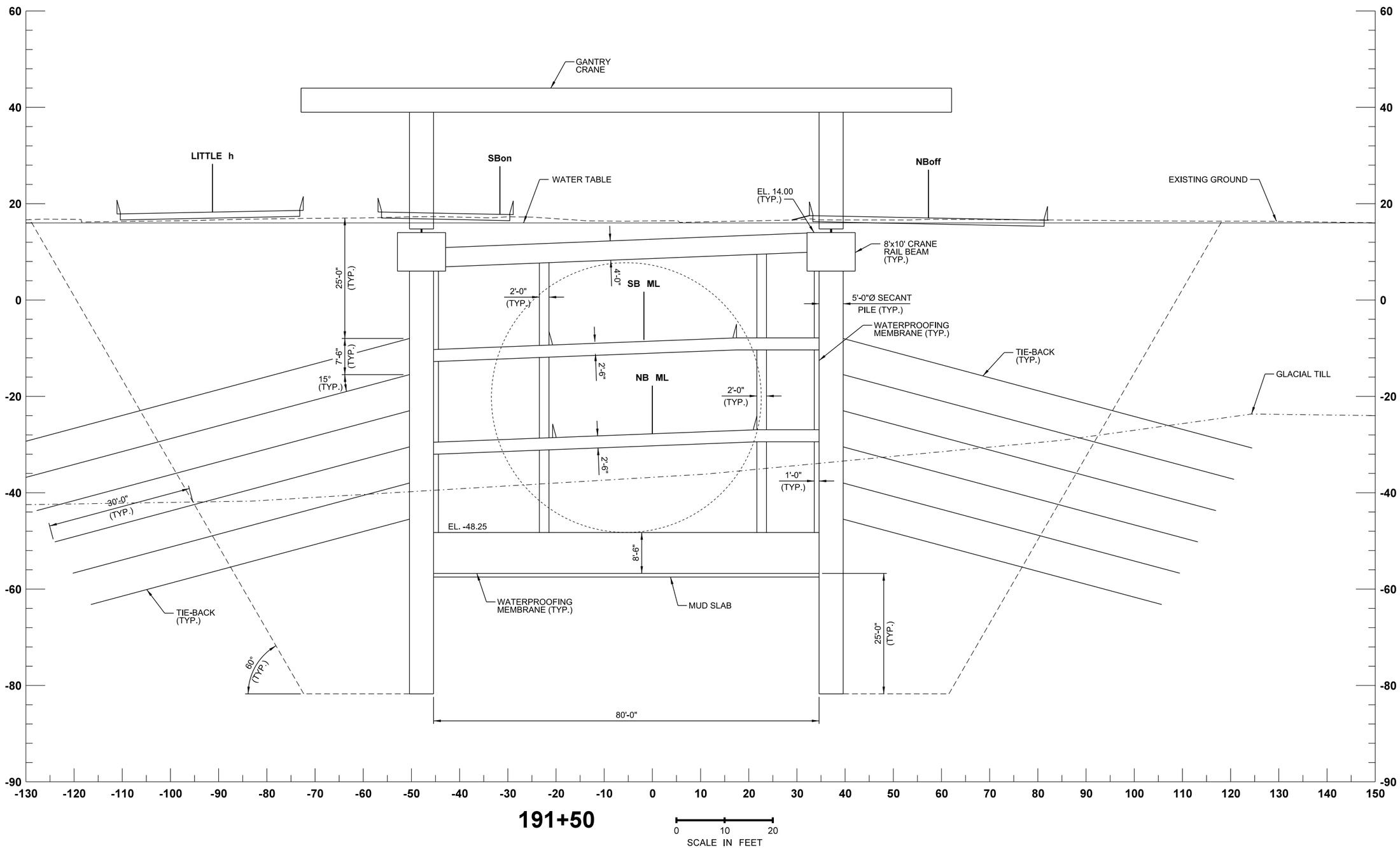

FILE NAME	IP_PWP:dms69908\46055-Txx-14SD019.DLV						
TIME	21-OCT-2010 09:59				REGION NO. 10	STATE WASH	FED.AID PROJ.NO.
DATE	21-OCT-2010				JOB NUMBER		
PLOTTED BY	groe						
DESIGNED BY	G. DORN				CONTRACT NO.	LOCATION NO.	
ENTERED BY	J. RODRIGUEZ						
CHECKED BY	S. BURCH						
PROJ. ENGR.	S. EVERETT						
REGIONAL ADM.	R. PAANANEN	REVISION	DATE	BY			

GERALD L. DORN STATE OF WASHINGTON 21429 STRUCTURAL ENGINEER PROFESSIONAL ENGINEER

RFP DESIGN
SUBMITTED BY
SEATTLE TUNNEL PARTNERS

NOT FOR CONSTRUCTION

Washington State Department of Transportation
U.S. Department of Transportation Federal Highway Administration
City of Seattle

ALASKAN WAY VIADUCT
REPLACEMENT PROJECT
SR 99 BORED TUNNEL
CONTRACT PACKAGE 14

SOUTH SECTION STATION 191+50

SD019

SHEET 67 OF 208 SHEETS

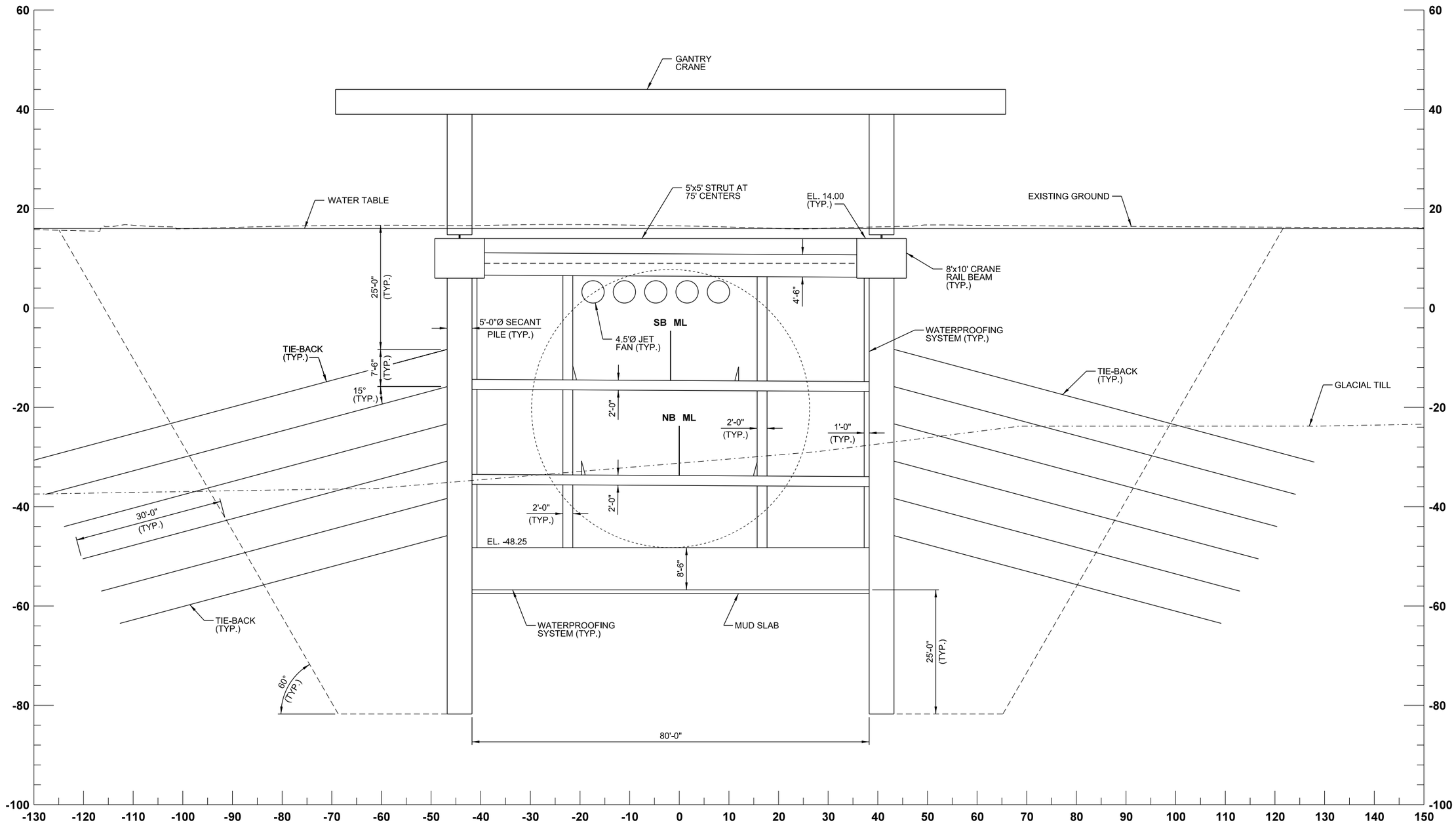

193+00

0 10 20
SCALE IN FEET

FILE NAME	IP_PWP:dms69908\46055-Txx-14SD021.DLV
TIME	21-OCT-2010 10:00
DATE	21-OCT-2010
PLOTTED BY	groe
DESIGNED BY	G. DORN
ENTERED BY	J. RODRIGUEZ
CHECKED BY	S. BURCH
PROJ. ENGR.	S. EVERETT
REGIONAL ADM.	R. PAANANEN

REVISION	DATE	BY

REGION NO.	STATE	FED.AID PROJ.NO.
10	WASH	
JOB NUMBER		
CONTRACT NO.		LOCATION NO.

GERALD L. DORN — STATE OF WASHINGTON — 21429 — PROFESSIONAL ENGINEER

RFP DESIGN
SUBMITTED BY
SEATTLE TUNNEL PARTNERS

NOT FOR CONSTRUCTION

Washington State Department of Transportation
U.S. Department of Transportation Federal Highway Administration
City of Seattle

ALASKAN WAY VIADUCT
REPLACEMENT PROJECT
SR 99 BORED TUNNEL
CONTRACT PACKAGE 14

SOUTH SECTION STATION 193+00

SD021

SHEET 68 OF 208 SHEETS

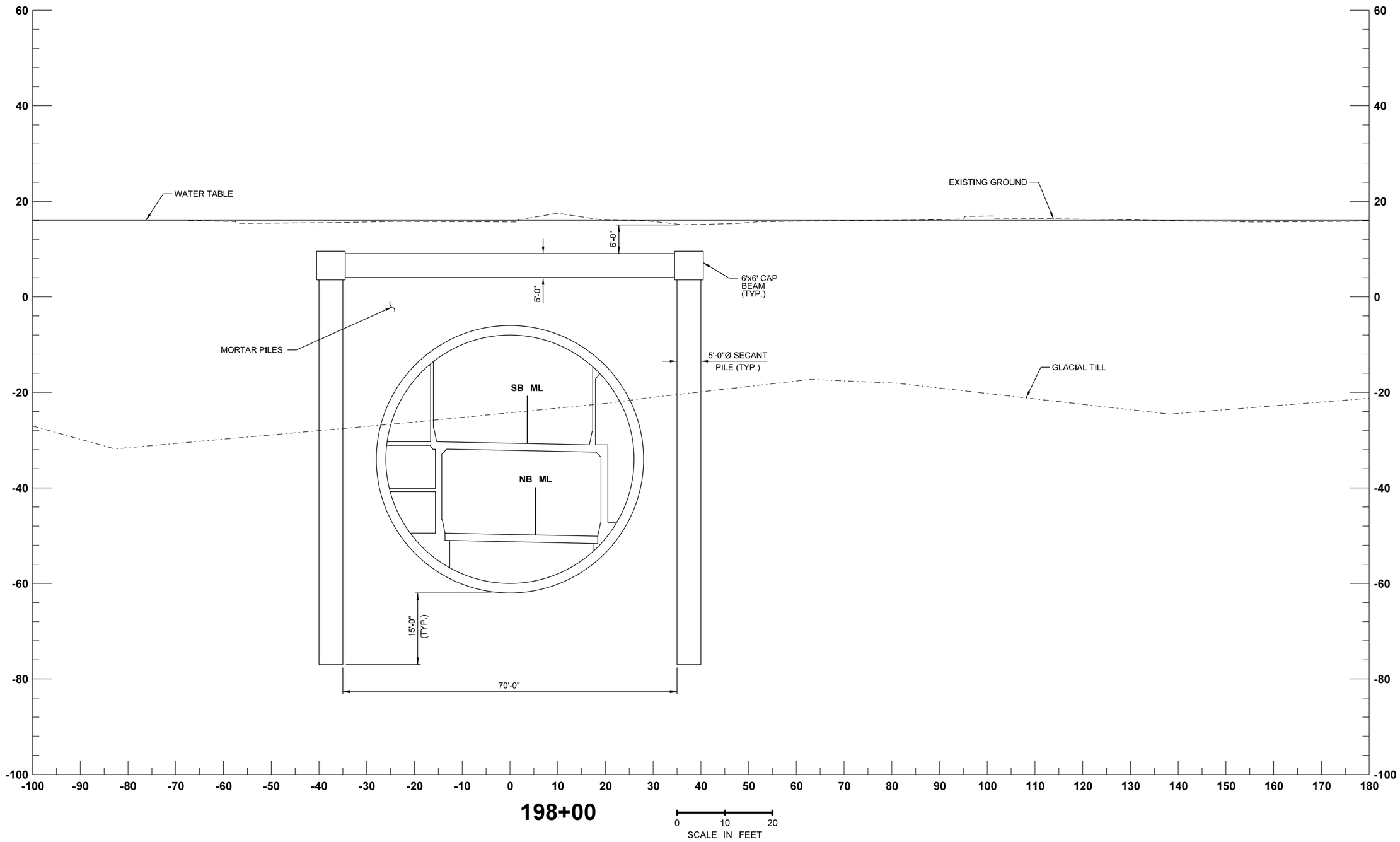

FILE NAME	IP_PWP:dms69908\46055-Txx-14SD025.DLV					
TIME	21-OCT-2010 10:00					
DATE	21-OCT-2010					
PLOTTED BY	groe					
DESIGNED BY	G. DORN					
ENTERED BY	J. RODRIGUEZ					
CHECKED BY	S. BURCH					
PROJ. ENGR.	S. EVERETT					
REGIONAL ADM.	R. PAANANEN	REVISION	DATE	BY		

REGION NO.	STATE	FED.AID PROJ.NO.
10	WASH	
JOB NUMBER		
CONTRACT NO.		LOCATION NO.

GERALD L. DORN STATE OF WASHINGTON 21429 STRUCTURAL ENGINEER PROFESSIONAL ENGINEER

RFP DESIGN
SUBMITTED BY
SEATTLE TUNNEL PARTNERS

NOT FOR CONSTRUCTION

Washington State Department of Transportation
U.S. Department of Transportation Federal Highway Administration
City of Seattle

ALASKAN WAY VIADUCT
REPLACEMENT PROJECT
SR 99 BORED TUNNEL
CONTRACT PACKAGE 14

SOUTH SECTION STATION 198+00

SD025

SHEET 69 OF 208 SHEETS

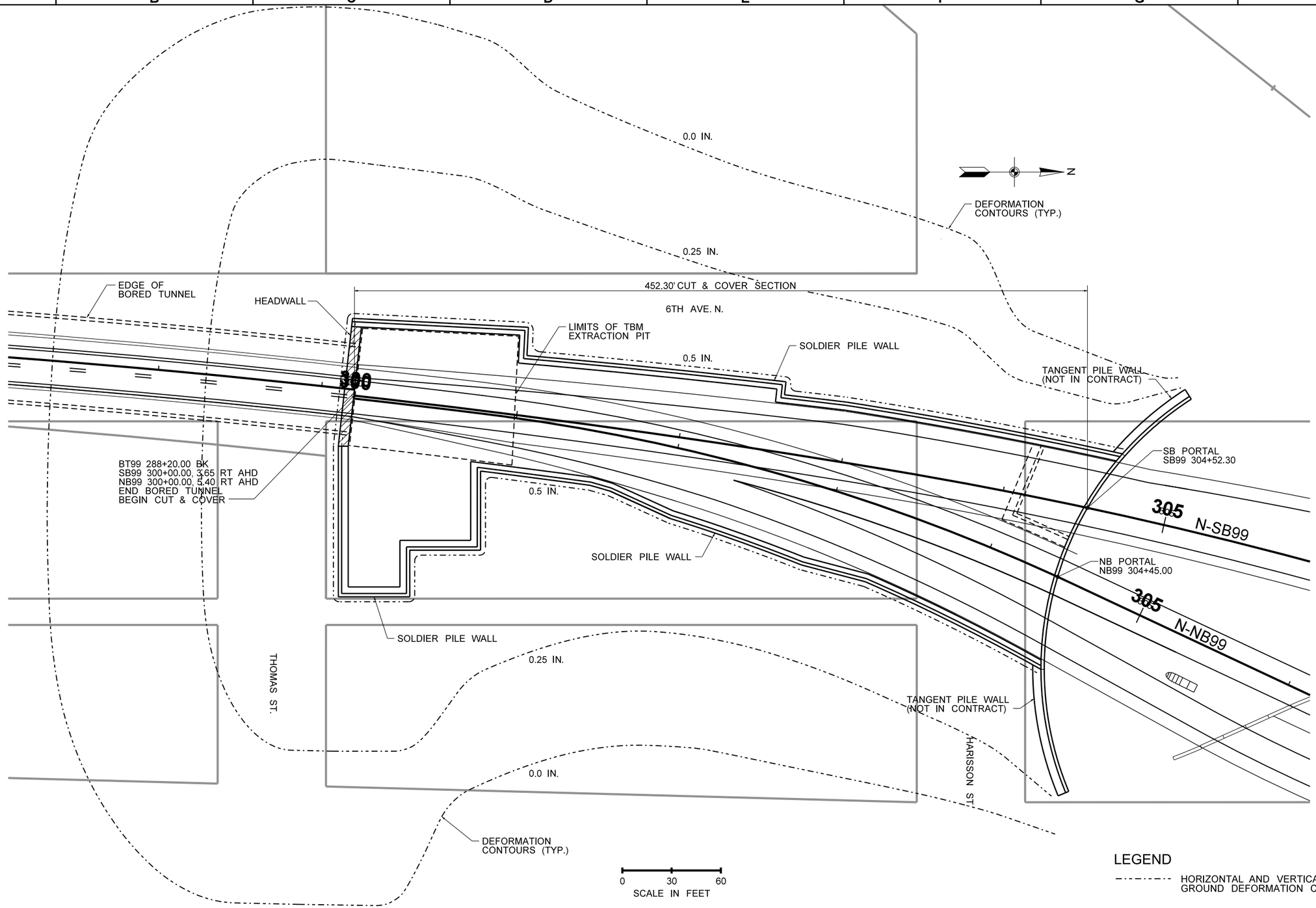

FILE NAME	IP_PWP:dms69908\46055-Txx-14SD050.DLV				REGION NO. 10	STATE WASH	FED.AID PROJ.NO.
TIME	21-OCT-2010 10:00				JOB NUMBER	
DATE	21-OCT-2010					
PLOTTED BY	groe					
DESIGNED BY	G. DORN				CONTRACT NO.	LOCATION NO.
ENTERED BY	D. NORMAN					
CHECKED BY	S. BURCH					
PROJ. ENGR.	S. EVERETT					
REGIONAL ADM.	R. PAANANEN	REVISION	DATE	BY		

GERALD L. DORN — STATE OF WASHINGTON — 21429 — STRUCTURAL ENGINEER — PROFESSIONAL ENGINEER

RFP DESIGN

SUBMITTED BY SEATTLE TUNNEL PARTNERS

NOT FOR CONSTRUCTION

Washington State Department of Transportation

U.S. Department of Transportation Federal Highway Administration

City of Seattle

ALASKAN WAY VIADUCT REPLACEMENT PROJECT
SR 99 BORED TUNNEL
CONTRACT PACKAGE 14

NORTH SHORING PLAN

SD050

SHEET 70 OF 208 SHEETS

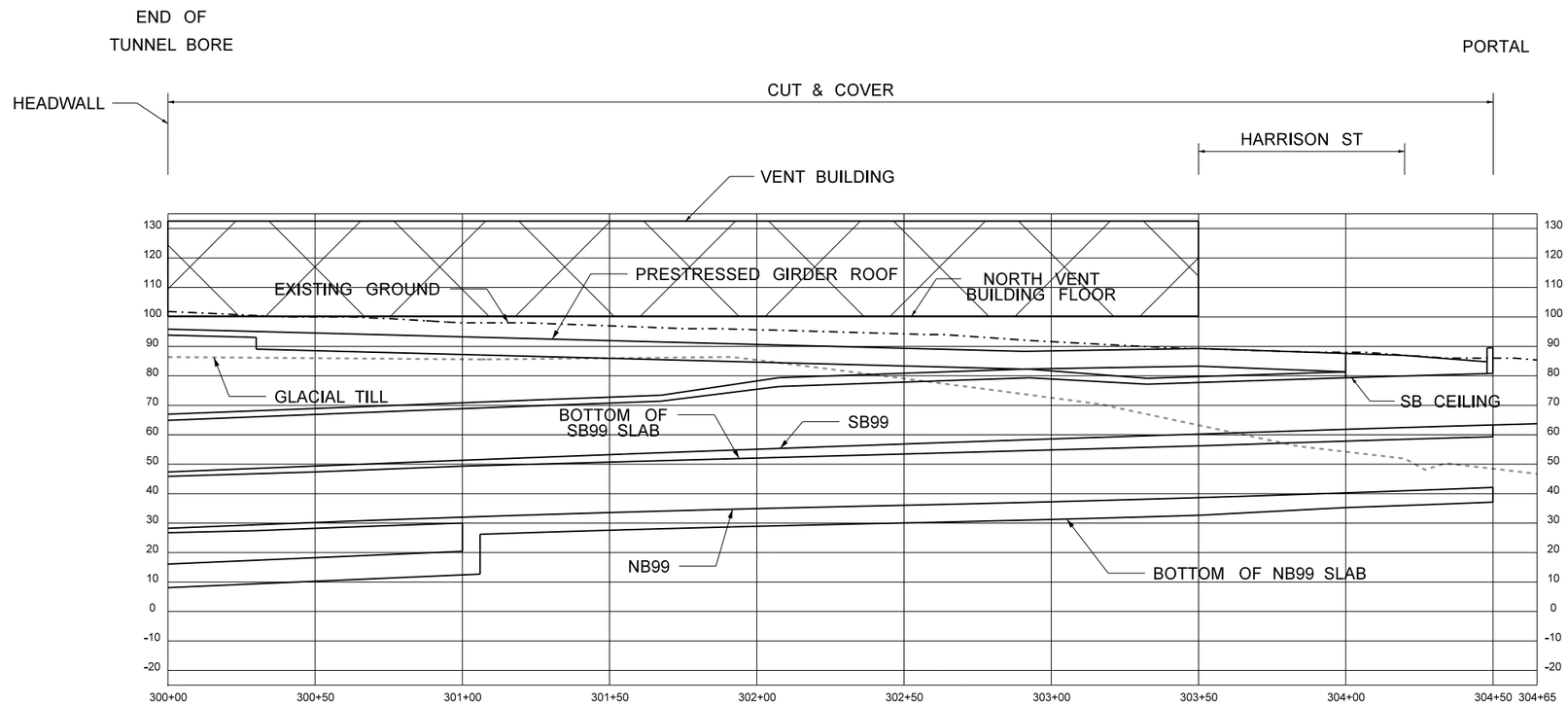

EXISTING GROUND

GLACIAL TILL

SLAB BOTTOM/TOP

TUNNEL TBM

0 25 50
SCALE IN FEET

FILE NAME	IP_PWP:dms69908\46055-Txx-14SD051.DLV					
TIME	21-OCT-2010 10:00					
DATE	21-OCT-2010					
PLOTTED BY	groe					
DESIGNED BY	G. DORN					
ENTERED BY	D. NORMAN					
CHECKED BY	S. BURCH					
PROJ. ENGR.	S. EVERETT					
REGIONAL ADM.	R. PAANANEN	REVISION	DATE	BY		

REGION NO.	STATE	FED.AID PROJ.NO.
10	WASH	
JOB NUMBER		
CONTRACT NO.		LOCATION NO.

GERALD L. DORN
STATE OF WASHINGTON
21429
STRUCTURAL ENGINEER
PROFESSIONAL ENGINEER

RFP DESIGN
SUBMITTED BY
SEATTLE TUNNEL PARTNERS

NOT FOR CONSTRUCTION

Washington State Department of Transportation
U.S. Department of Transportation Federal Highway Administration
City of Seattle

ALASKAN WAY VIADUCT
REPLACEMENT PROJECT
SR 99 BORED TUNNEL
CONTRACT PACKAGE 14

NORTH LONGITUDINAL SECTION

SD051

SHEET 71 OF 208 SHEETS

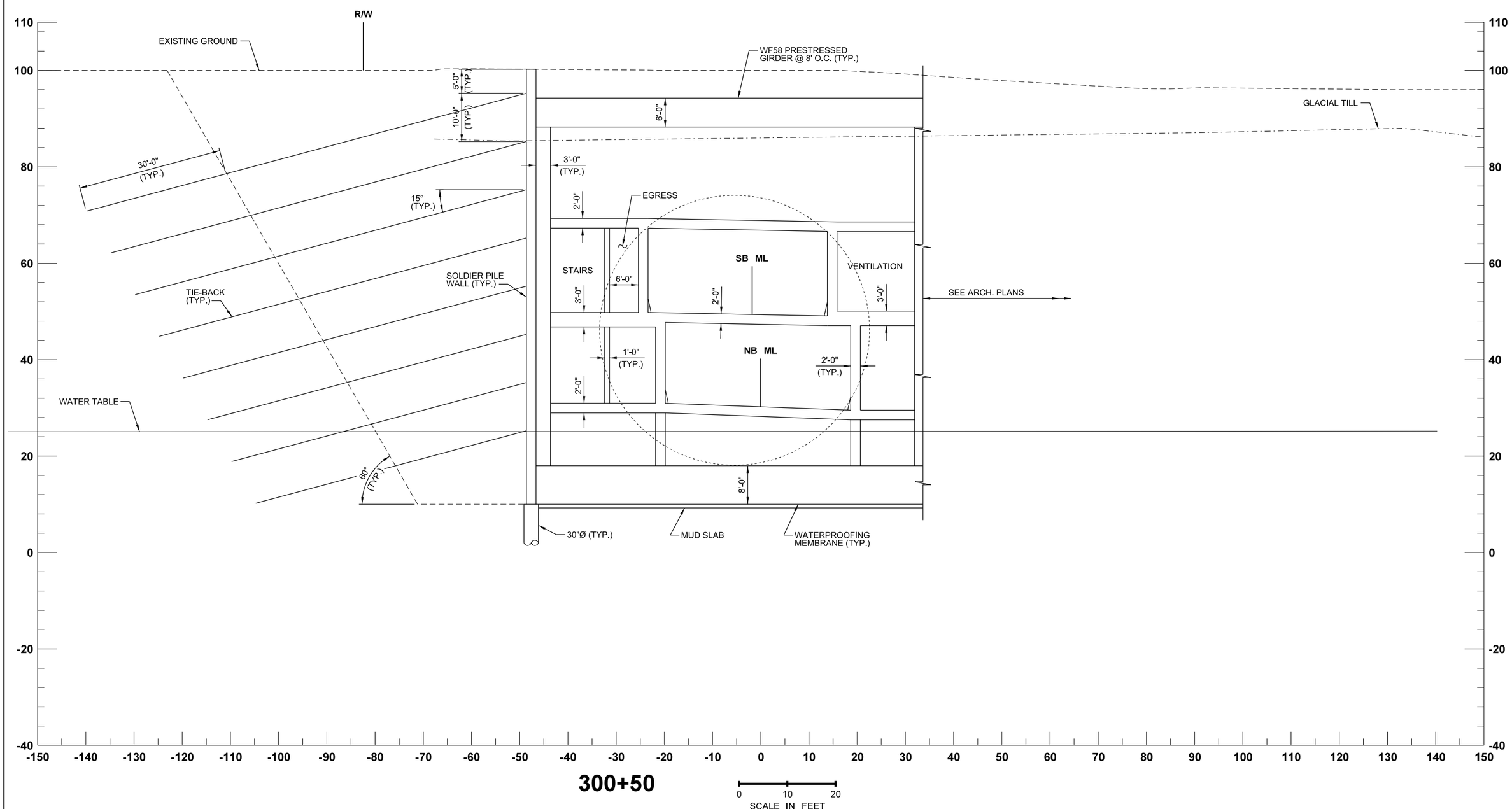

FILE NAME	IP_PWP:dms69908\46055-Txx-14SD053.DLV					
TIME	21-OCT-2010 10:01					
DATE	21-OCT-2010					
PLOTTED BY	groe					
DESIGNED BY	G. DORN					
ENTERED BY	J. RODRIGUEZ					
CHECKED BY	S. BURCH					
PROJ. ENGR.	S. EVERETT					
REGIONAL ADM.	R. PAANANEN	REVISION	DATE	BY		

REGION NO.	STATE	FED.AID PROJ.NO.
10	WASH	
JOB NUMBER		
CONTRACT NO.		LOCATION NO.

GERALD L. DORN — STATE OF WASHINGTON — 21429 — SUPERVISING ENGINEER — PROFESSIONAL ENGINEER

RFP DESIGN

SUBMITTED BY
SEATTLE TUNNEL PARTNERS

NOT FOR CONSTRUCTION

Washington State Department of Transportation

U.S. Department of Transportation
Federal Highway Administration

City of Seattle

ALASKAN WAY VIADUCT
REPLACEMENT PROJECT
SR 99 BORED TUNNEL
CONTRACT PACKAGE 14

NORTH SECTION STATION 300+50

SD053

SHEET 72 OF 208 SHEETS

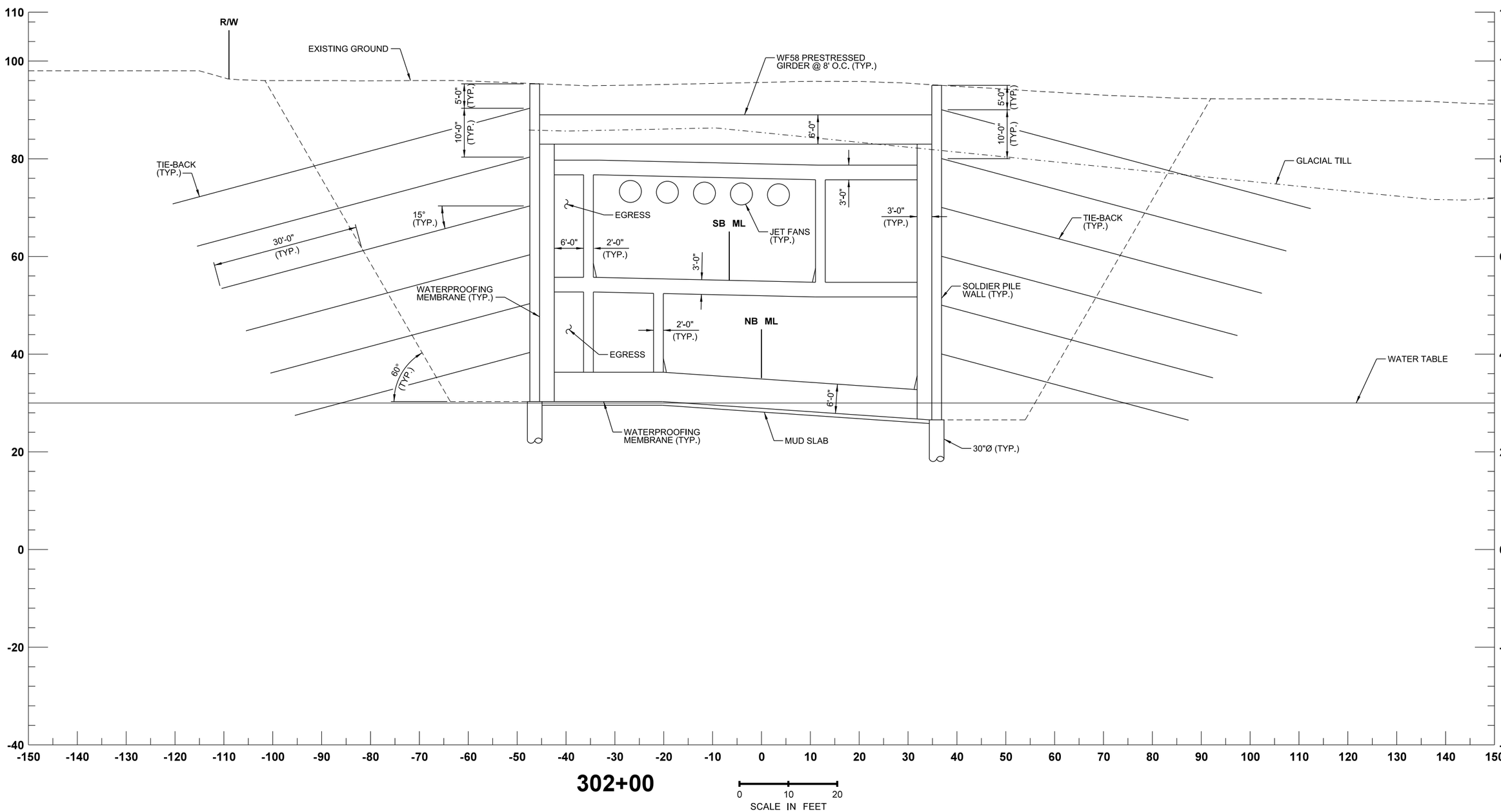

FILE NAME	IP_PWP:dms69908\46055-Txx-14SD055.DLV					
TIME	21-OCT-2010 10:01					
DATE	21-OCT-2010					
PLOTTED BY	groe					
DESIGNED BY	G. DORN					
ENTERED BY	J. RODRIGUEZ					
CHECKED BY	S. BURCH					
PROJ. ENGR.	S. EVERETT					
REGIONAL ADM.	R. PAANANEN	REVISION	DATE	BY		

REGION NO.	STATE	FED.AID PROJ.NO.
10	WASH	
JOB NUMBER		
CONTRACT NO.		LOCATION NO.

GERALD L. DORN — STATE OF WASHINGTON — 21429 — STRUCTURAL ENGINEER — PROFESSIONAL ENGINEER

RFP DESIGN

SUBMITTED BY
SEATTLE TUNNEL PARTNERS

NOT FOR CONSTRUCTION

Washington State Department of Transportation
U.S. Department of Transportation Federal Highway Administration
City of Seattle

ALASKAN WAY VIADUCT
REPLACEMENT PROJECT
SR 99 BORED TUNNEL
CONTRACT PACKAGE 14

NORTH SECTION STATION 302+00

SD055

SHEET 73 OF 208 SHEETS

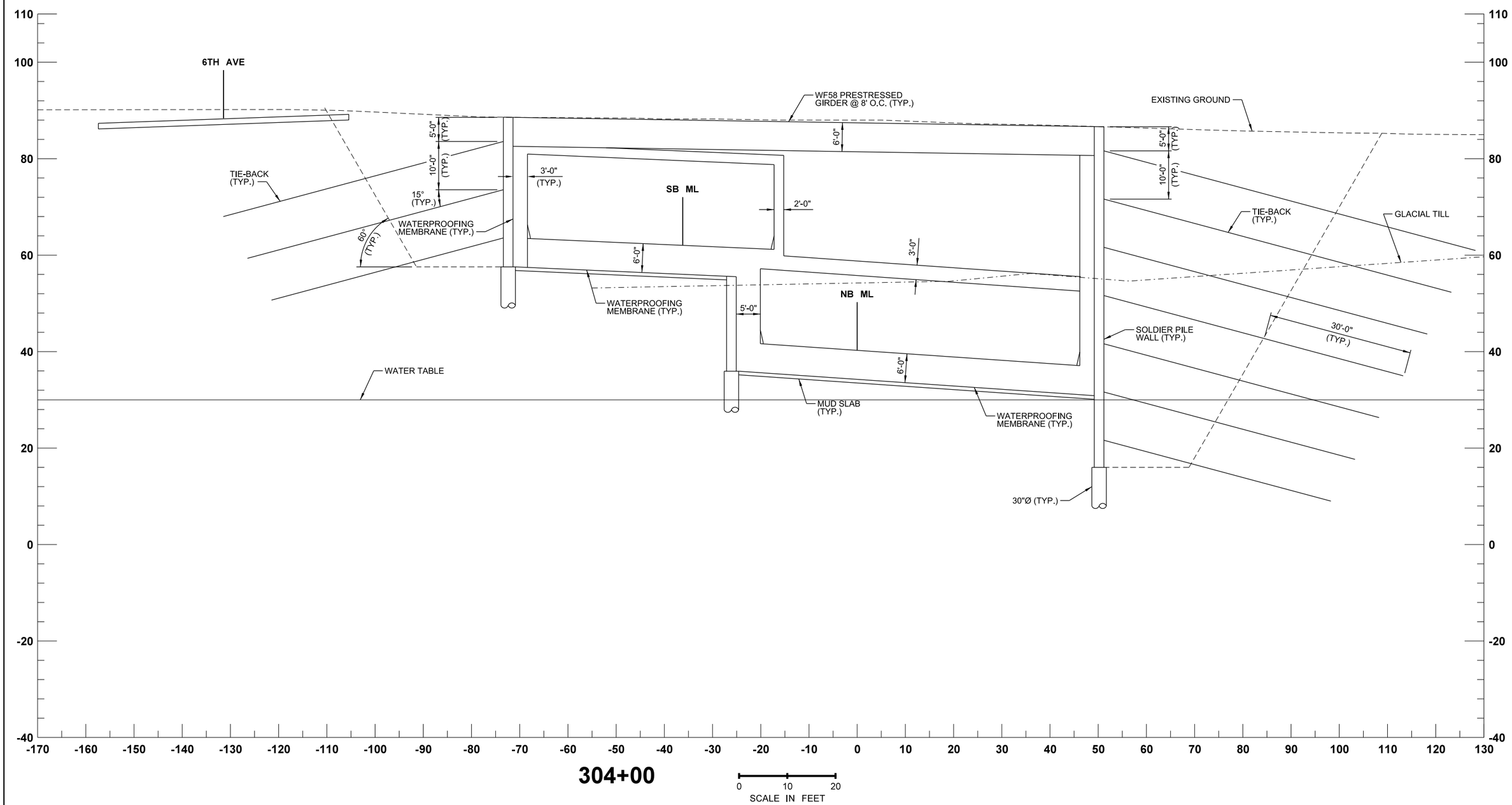

FILE NAME	IP_PWP:dms69908\46055-Txx-14SD057.DLV					
TIME	21-OCT-2010 10:01					
DATE	21-OCT-2010					
PLOTTED BY	groe					
DESIGNED BY	G. DORN					
ENTERED BY	J. RODRIGUEZ					
CHECKED BY	S. BURCH					
PROJ. ENGR.	S. EVERETT					
REGIONAL ADM.	R. PAANANEN	REVISION	DATE	BY		

REGION NO.	STATE	FED.AID PROJ.NO.
10	WASH	
JOB NUMBER		
CONTRACT NO.		LOCATION NO.

GERALD L. DORN — STATE OF WASHINGTON — 21429 — STRUCTURAL ENGINEER — PROFESSIONAL ENGINEER

RFP DESIGN

SUBMITTED BY
SEATTLE TUNNEL PARTNERS

NOT FOR CONSTRUCTION

Washington State Department of Transportation

U.S. Department of Transportation
Federal Highway Administration

City of Seattle

ALASKAN WAY VIADUCT
REPLACEMENT PROJECT
SR 99 BORED TUNNEL
CONTRACT PACKAGE 14

NORTH SECTION STATION 304+00

SD057

SHEET 74 OF 208 SHEETS

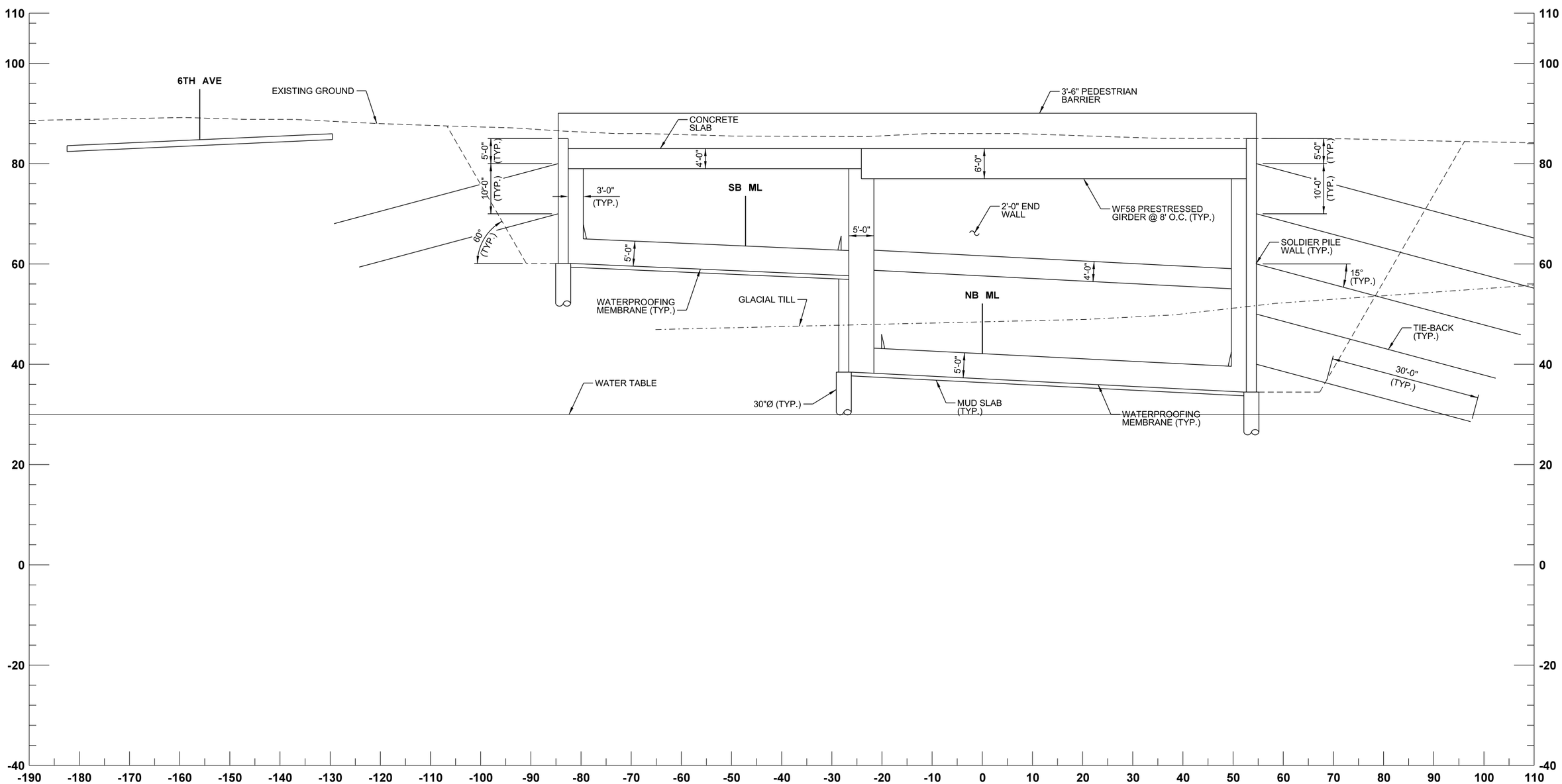

304+50 PORTAL

0 10 20
SCALE IN FEET

FILE NAME	IP_PWP:dms69908\46055-Txx-14SD058.DLV					
TIME	21-OCT-2010 10:01					
DATE	21-OCT-2010					
PLOTTED BY	groe					
DESIGNED BY	G. DORN					
ENTERED BY	J. RODRIGUEZ					
CHECKED BY	S. BURCH					
PROJ. ENGR.	S. EVERETT					
REGIONAL ADM.	R. PAANANEN	REVISION	DATE	BY		

REGION NO.	STATE	FED.AID PROJ.NO.
10	WASH	
JOB NUMBER		
CONTRACT NO.		LOCATION NO.

GERALD L. DORN STATE OF WASHINGTON 21429 REGISTERED PROFESSIONAL ENGINEER

RFP DESIGN
SUBMITTED BY
SEATTLE TUNNEL PARTNERS

NOT FOR CONSTRUCTION

Washington State Department of Transportation
U.S. Department of Transportation Federal Highway Administration
City of Seattle

ALASKAN WAY VIADUCT
REPLACEMENT PROJECT
SR 99 BORED TUNNEL
CONTRACT PACKAGE 14

NORTH SECTION STATION 304+50

SD058

SHEET 75 OF 208 SHEETS

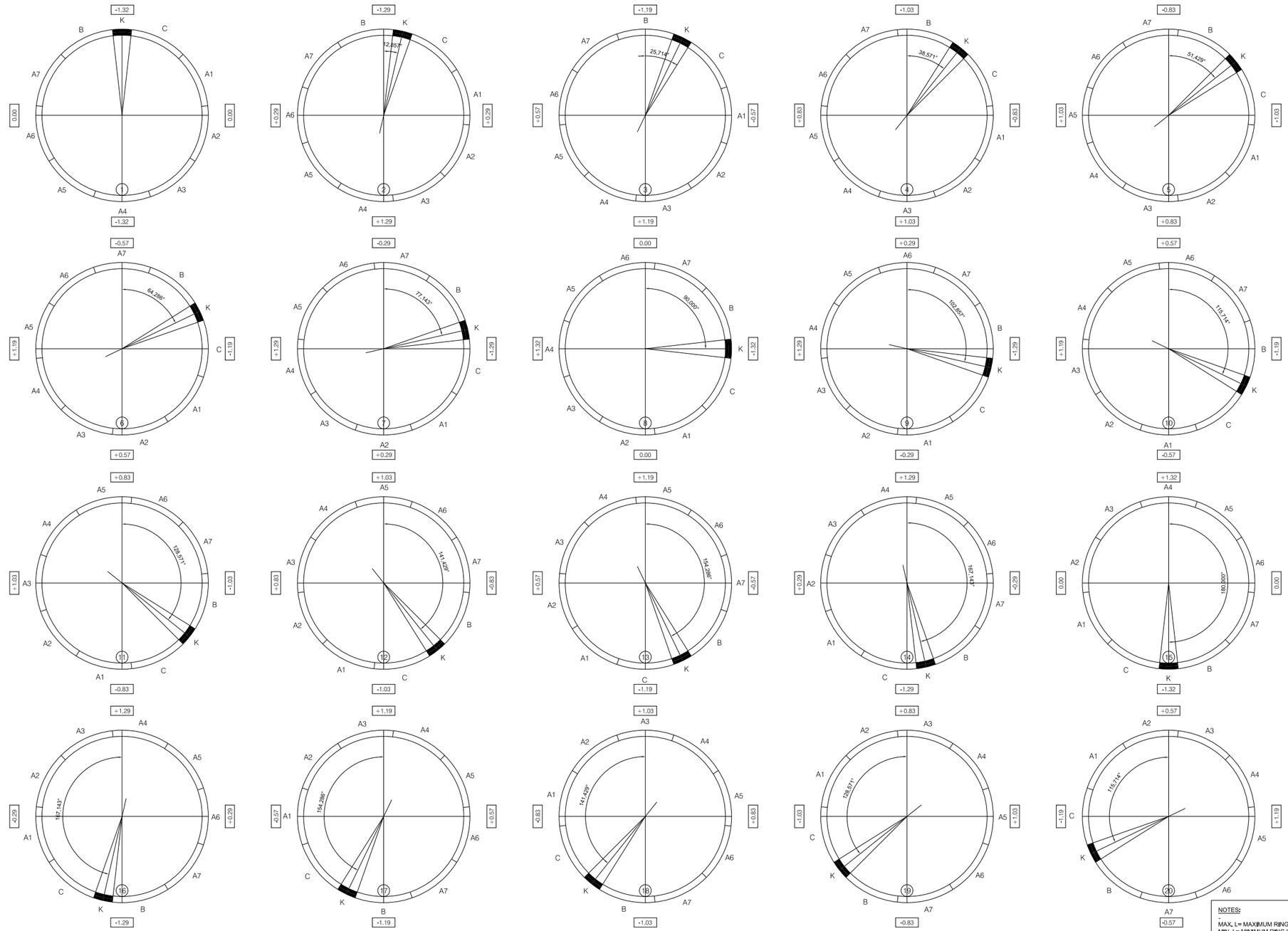

NOTES:
-
MAX. L= MAXIMUM RING LENGTH
MIN. L= MINIMUM RING LENGTH

DIMENSIONS IN INCHES AND DEGREES

FILE NAME	IP_PWP:dms69908\46055-Txx-14TS001.DLV				REGION NO. 10	STATE WASH	FED.AID PROJ.NO.
TIME	19-OCT-2010 15:42				JOB NUMBER		
DATE	19-OCT-2010						
PLOTTED BY	groe						
DESIGNED BY	C. CALVO				CONTRACT NO.		LOCATION NO.
ENTERED BY	C. CALVO						
CHECKED BY	S. TREYGER						
PROJ. ENGR.	S. EVERETT						
REGIONAL ADM.	R. PAANANEN	REVISION	DATE	BY			

RFP DESIGN
SUBMITTED BY
SEATTLE TUNNEL PARTNERS

NOT FOR CONSTRUCTION

Washington State Department of Transportation
U.S. Department of Transportation Federal Highway Administration
City of Seattle

ALASKAN WAY VIADUCT
REPLACEMENT PROJECT
SR 99 BORED TUNNEL
CONTRACT PACKAGE 14

GENERAL DEFINITION
SEGMENT POSITION

TS001

SHEET 76 OF 208 SHEETS

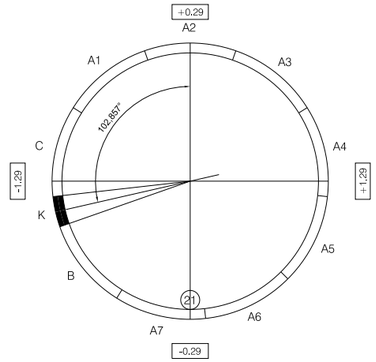

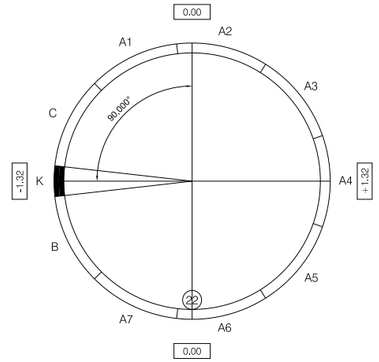

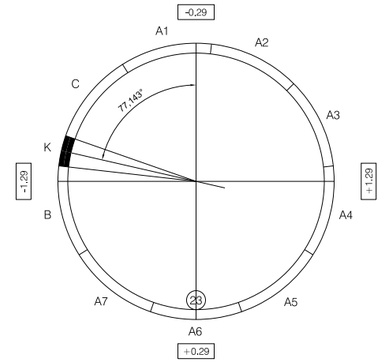

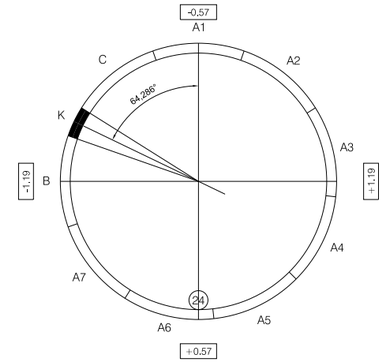

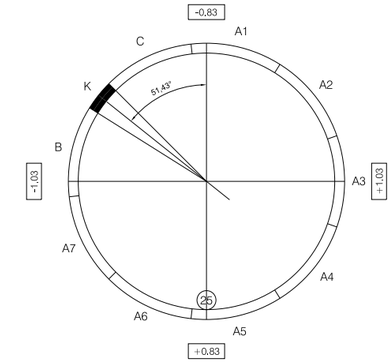

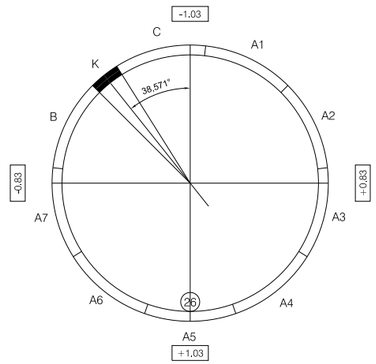

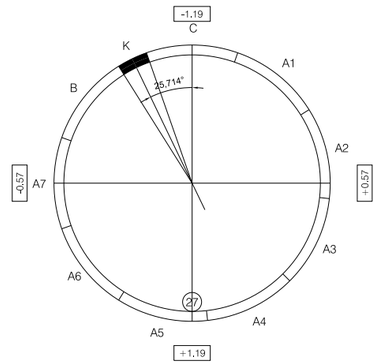

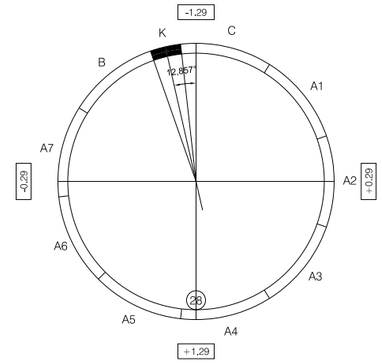

NOTES:

MAX. L= MAXIMUM RING LENGTH
MIN. L= MINIMUM RING LENGTH

DIMENSIONS IN INCHES AND DEGREES

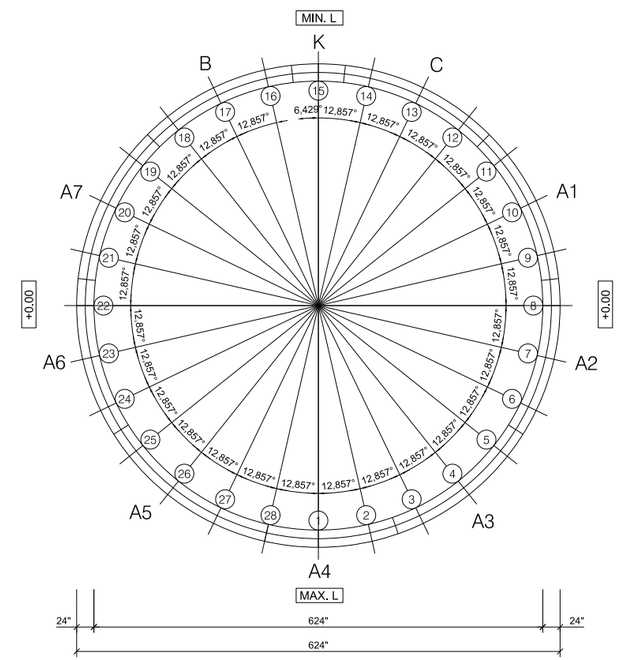

RING DEFINITION
ESCALA A-1= 1/100
A-3= 1/200

FILE NAME	IP_PWP:dms69908\46055-Txx-14TS002.DLV						
TIME	19-OCT-2010 15:43				REGION NO.	STATE	FED.AID PROJ.NO.
DATE	19-OCT-2010				10	WASH	
PLOTTED BY	groe				JOB NUMBER		
DESIGNED BY	C. CALVO						
ENTERED BY	C. CALVO						
CHECKED BY	S. TREYGER				CONTRACT NO.		LOCATION NO.
PROJ. ENGR.	S. EVERETT						
REGIONAL ADM.	R. PAANANEN	REVISION	DATE	BY			

SEAMON TREYGER · STATE OF WASHINGTON · 20868 · STRUCTURAL ENGINEER · PROFESSIONAL ENGINEER

RFP DESIGN
SUBMITTED BY
SEATTLE TUNNEL PARTNERS

NOT FOR CONSTRUCTION

Washington State Department of Transportation
U.S. Department of Transportation Federal Highway Administration
City of Seattle

ALASKAN WAY VIADUCT
REPLACEMENT PROJECT
SR 99 BORED TUNNEL
CONTRACT PACKAGE 14

GENERAL DEFINITION
SEGMENT POSITION

TS002

SHEET 77 OF 208 SHEETS

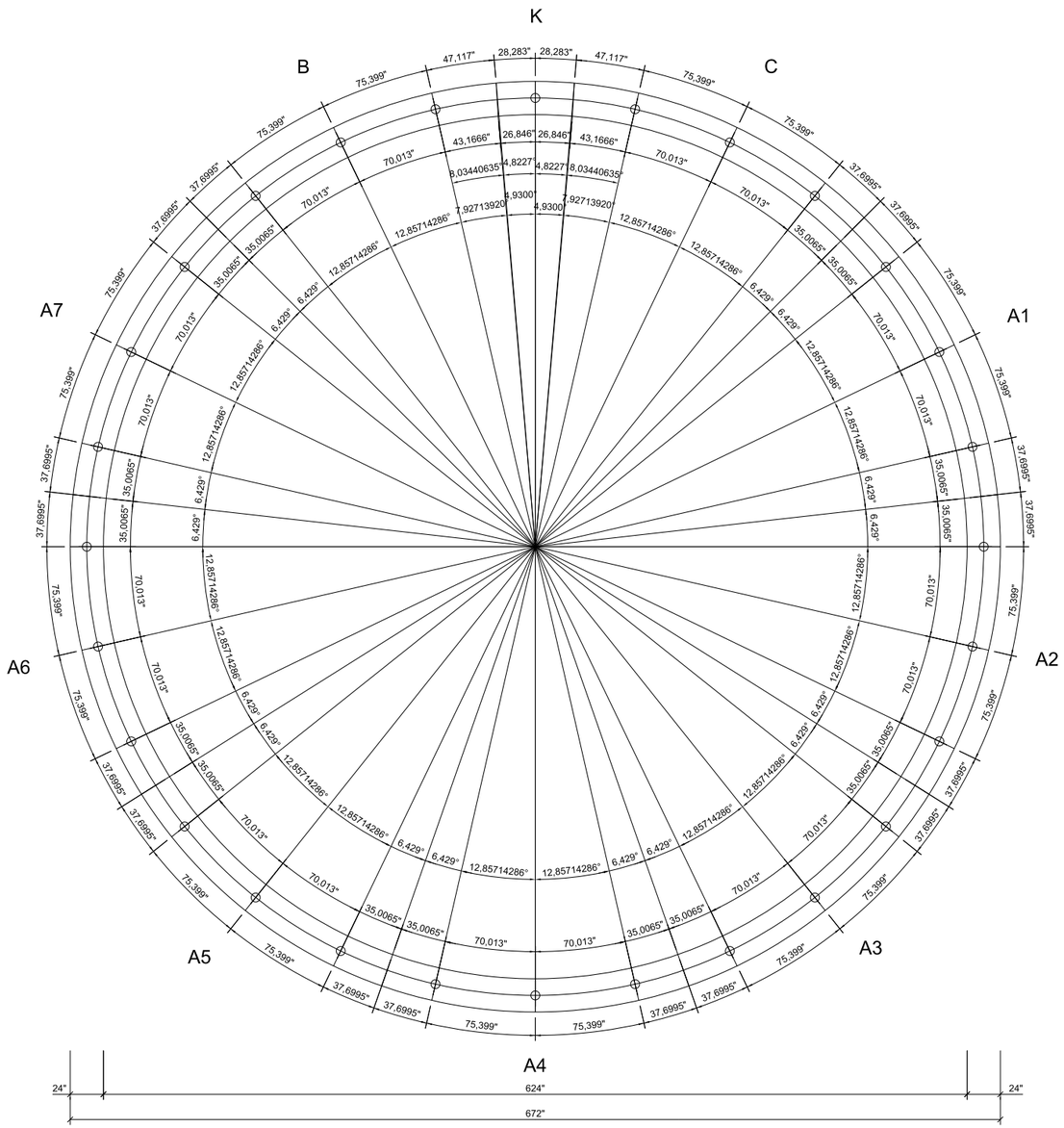

SEGMENTJOINTS (VIEW TOWARDS ADVANCE)
SCALE A-1= 1/50
A-3= 1/100

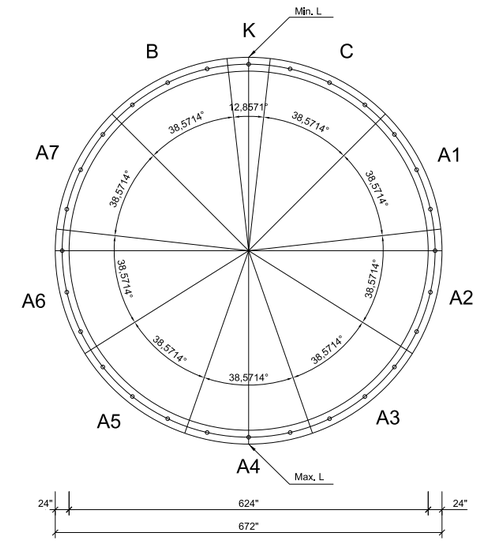

RING DEFINITION
SCALE A-1= 1/125
A-3= 1/250

FILE NAME	IP_PWP:dms69908\46055-Txx-14TS003.DLV						
TIME	19-OCT-2010 15:43				REGION NO.	STATE	FED.AID PROJ.NO.
DATE	19-OCT-2010				10	WASH	
PLOTTED BY	groe				JOB NUMBER		
DESIGNED BY	C. CALVO						
ENTERED BY	C. CALVO						
CHECKED BY	S. TREYGER				CONTRACT NO.		LOCATION NO.
PROJ. ENGR.	S. EVERETT						
REGIONAL ADM.	R. PAANANEN	REVISION	DATE	BY			

SEAMTON TREYGER · STATE OF WASHINGTON · 20868 · STRUCTURAL ENGINEER · PROFESSIONAL ENGINEER

RFP DESIGN
SUBMITTED BY
SEATTLE TUNNEL PARTNERS

NOT FOR CONSTRUCTION

Washington State Department of Transportation
U.S. Department of Transportation Federal Highway Administration
City of Seattle

ALASKAN WAY VIADUCT
REPLACEMENT PROJECT
SR 99 BORED TUNNEL
CONTRACT PACKAGE 14

GENERAL DEFINITION
VIEW TOWARDS THE ADVANCE

TS003

SHEET 78 OF 208 SHEETS

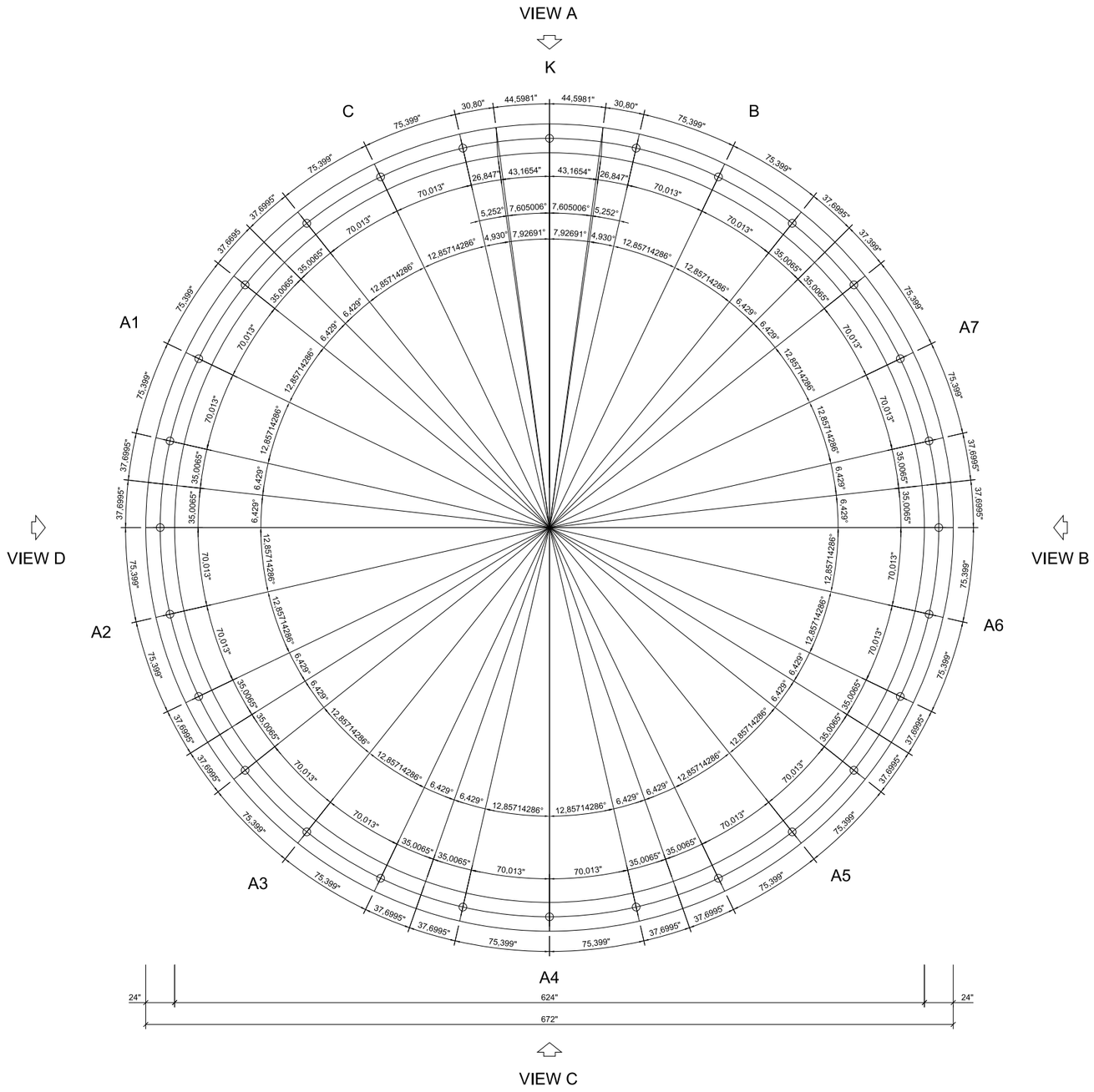

SEGMENT JOINTS (VIEW FROM THE SHIELD) Z=0

SCALE A-1= 1/50
A-3= 1/100

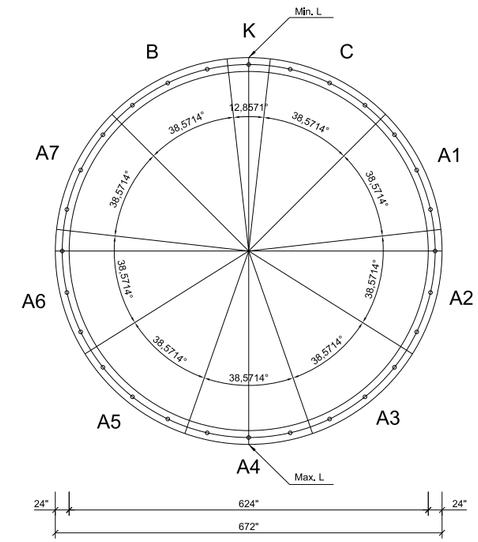

RING DEFINITION

SCALE A-1= 1/125
A-3= 1/250

FILE NAME	IP_PWP:dms69908\46055-Txx-14TS004.DLV				REGION NO.	STATE	FED.AID PROJ.NO.
TIME	19-OCT-2010 15:43				10	WASH	
DATE	19-OCT-2010				JOB NUMBER		
PLOTTED BY	groe						
DESIGNED BY	C. CALVO				CONTRACT NO.		LOCATION NO.
ENTERED BY	C. CALVO						
CHECKED BY	S. TREYGER						
PROJ. ENGR.	S. EVERETT						
REGIONAL ADM.	R. PAANANEN	REVISION	DATE	BY			

SEMYON TREYGER STATE OF WASHINGTON 20868 STRUCTURAL ENGINEER PROFESSIONAL ENGINEER

RFP DESIGN
SUBMITTED BY
SEATTLE TUNNEL PARTNERS

NOT FOR CONSTRUCTION

Washington State Department of Transportation
U.S. Department of Transportation Federal Highway Administration
City of Seattle

ALASKAN WAY VIADUCT
REPLACEMENT PROJECT
SR 99 BORED TUNNEL
CONTRACT PACKAGE 14

GENERAL DEFINITION
SEGMENT JOINS (VIEW FROM THE SHEILD)

TS004

SHEET 79 OF 208 SHEETS

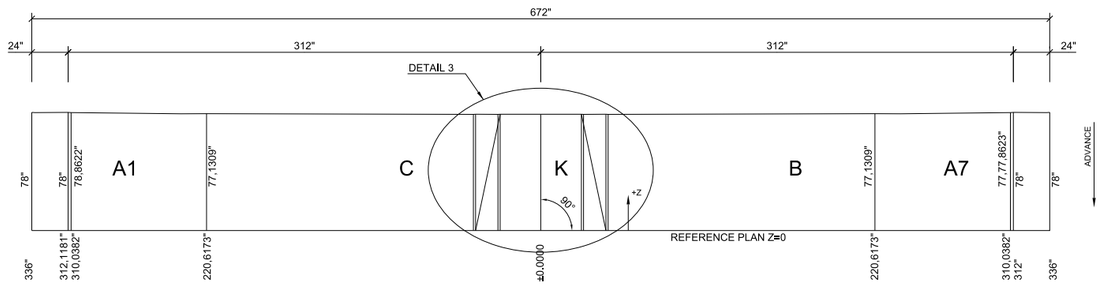

VIEW A
SCALE A-1= 1/50
A-3= 1/100

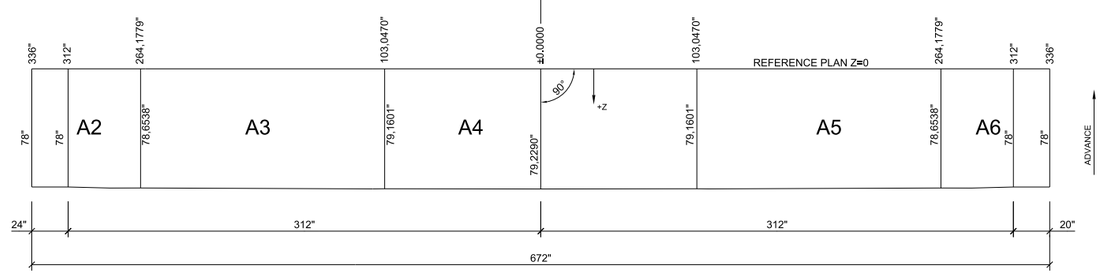

VIEW C
SCALE A-1= 1/50
A-3= 1/100

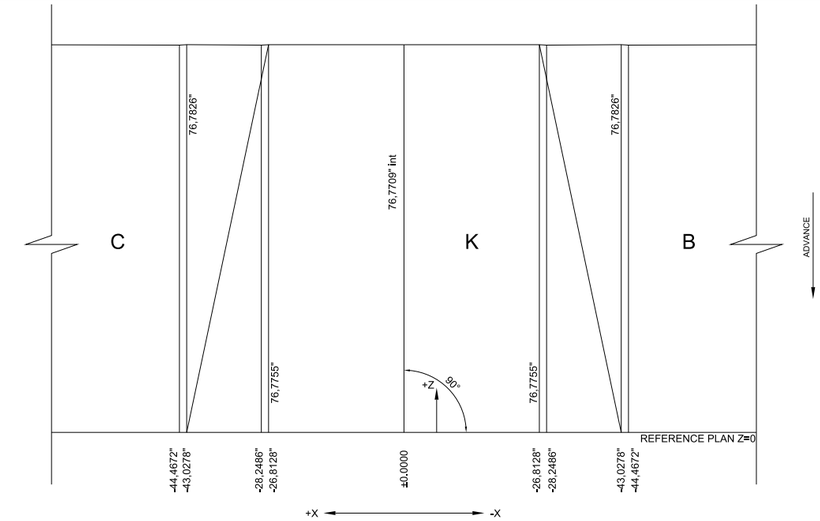

DETAIL 3
SCALE A-1= 1/15
A-3= 1/30

NOTES:

e= LENGTH REFERRED TO THE EXTERNAL RADIUS
i= LENGTH REFERRED TO THE INTERNAL RADIUS
Max. L= MAXIMUM RING LENGTH
Min. L= MINIMUM RING LENGTH

DIMENSIONS IN INCHES AND DEGREES

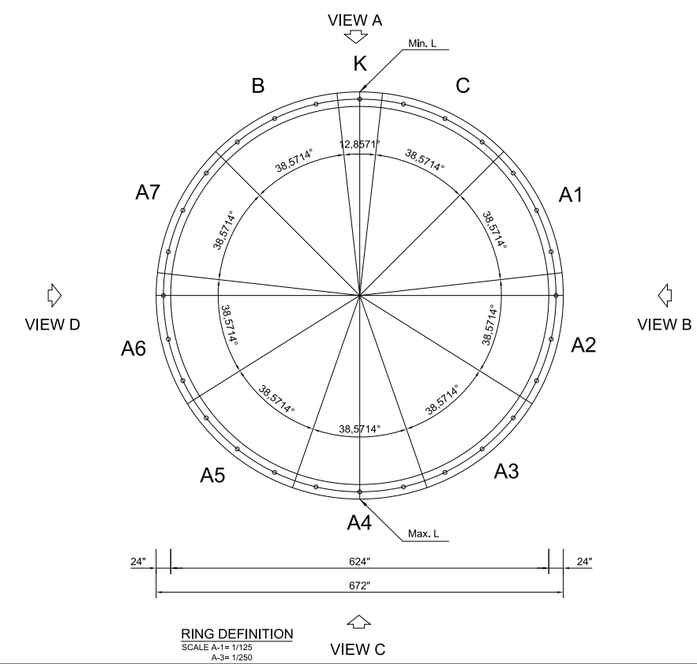

RING DEFINITION
SCALE A-1= 1/125
A-3= 1/250

FILE NAME	IP_PWP:dms69908\46055-Txx-14TS005.DLV						
TIME	19-OCT-2010 15:43				REGION NO.	STATE	FED.AID PROJ.NO.
DATE	19-OCT-2010				10	WASH	
PLOTTED BY	groe				JOB NUMBER		
DESIGNED BY	C. CALVO						
ENTERED BY	C. CALVO						
CHECKED BY	S. TREYGER				CONTRACT NO.		LOCATION NO.
PROJ. ENGR.	S. EVERETT						
REGIONAL ADM.	R. PAANANEN	REVISION	DATE	BY			

SEMYON TREYGER — STATE OF WASHINGTON — 20868 — STRUCTURAL ENGINEER — PROFESSIONAL ENGINEER

RFP DESIGN
SUBMITTED BY
SEATTLE TUNNEL PARTNERS

NOT FOR CONSTRUCTION

Washington State Department of Transportation
U.S. Department of Transportation Federal Highway Administration
City of Seattle

ALASKAN WAY VIADUCT
REPLACEMENT PROJECT
SR 99 BORED TUNNEL
CONTRACT PACKAGE 14

GENERAL DEFINITION
VOUSSOIR GEOMETRY

TS005

SHEET 80 OF 208 SHEETS

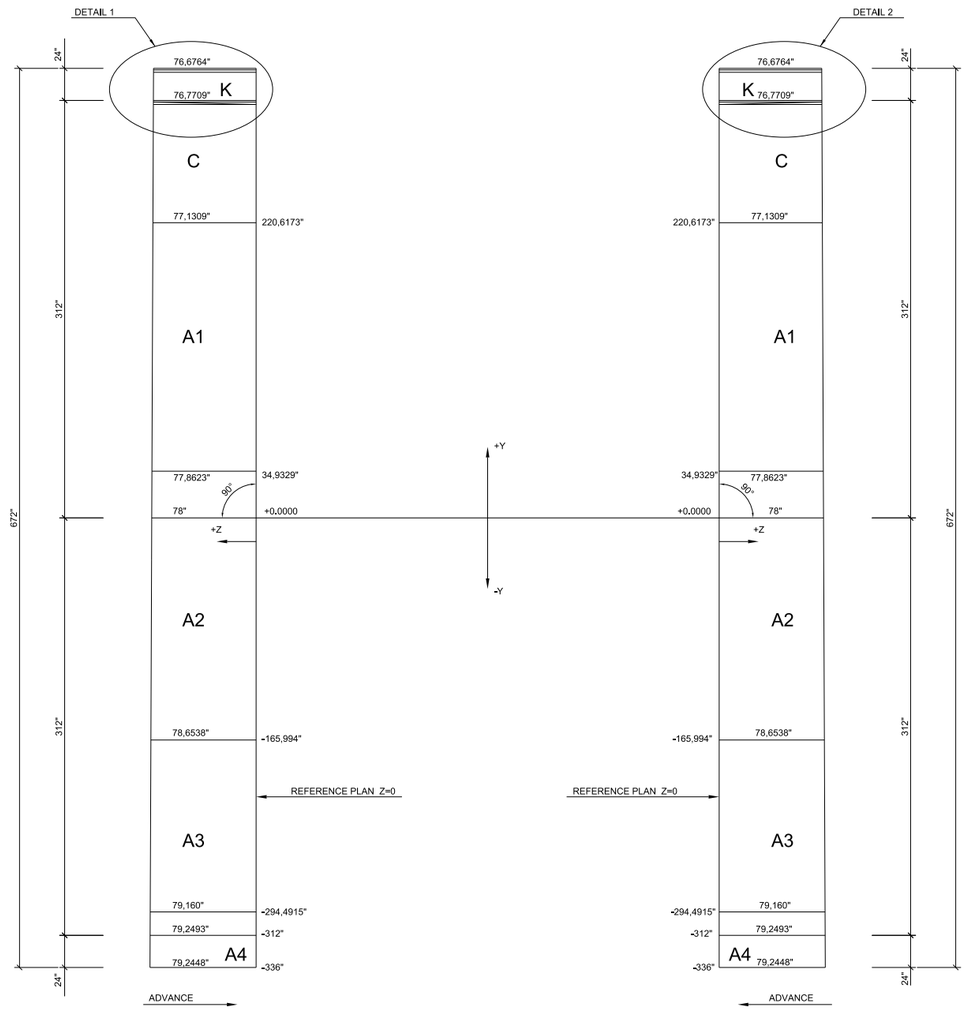

VIEW D
SCALE A-1= 1/50
A-3= 1/100

VIEW B
SCALE A-1= 1/50
A-3= 1/100

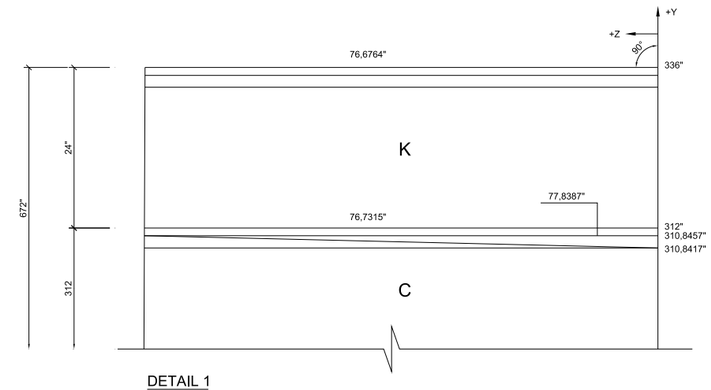

DETAIL 1
SCALE A-1= 1/10
A-3= 1/20

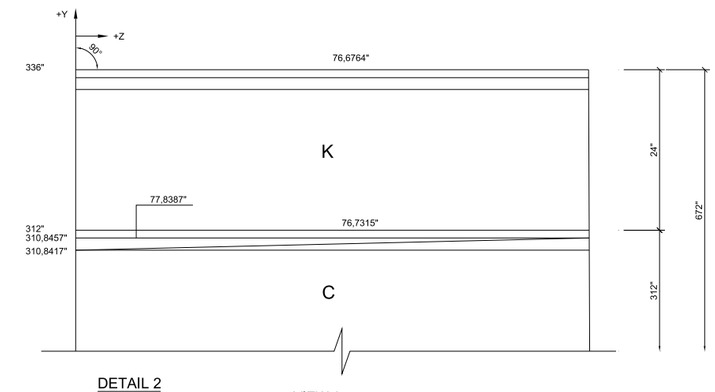

DETAIL 2
SCALE A-1= 1/10
A-3= 1/20

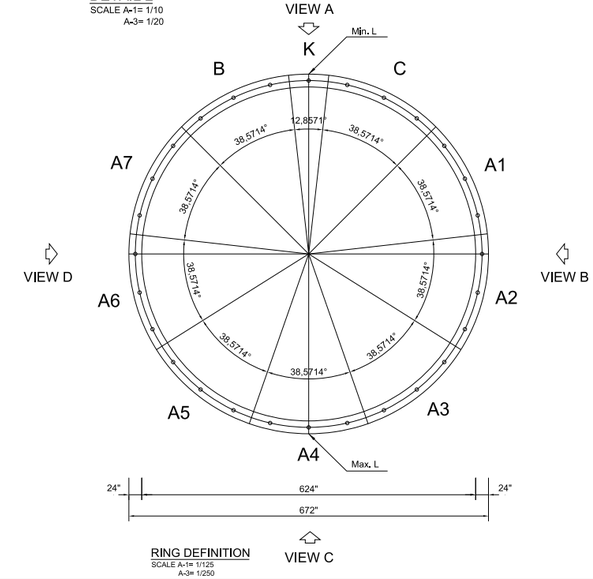

RING DEFINITION
SCALE A-1= 1/125
A-3= 1/250

NOTES:

e= LENGTH REFERRED TO THE EXTERNAL RADIUS
i= LENGTH REFERRED TO THE INTERNAL RADIUS
Max. L= MAXIMUM RING LENGTH
Min. L= MINIMUM RING LENGTH

DIMENSIONS IN INCHES AND DEGREES

FILE NAME	IP_PWP:dms69908\46055-Txx-14TS006.DLV				REGION NO.	STATE	FED.AID PROJ.NO.
TIME	19-OCT-2010 15:44				10	WASH	
DATE	19-OCT-2010				JOB NUMBER		
PLOTTED BY	groe						
DESIGNED BY	C. CALVO						
ENTERED BY	C. CALVO						
CHECKED BY	S. TREYGER				CONTRACT NO.		LOCATION NO.
PROJ. ENGR.	S. EVERETT						
REGIONAL ADM.	R. PAANANEN	REVISION	DATE	BY			

SEMYON TREYGER
STATE OF WASHINGTON
20868
STRUCTURAL ENGINEER
PROFESSIONAL ENGINEER

RFP DESIGN
SUBMITTED BY
SEATTLE TUNNEL PARTNERS

NOT FOR CONSTRUCTION

Washington State Department of Transportation
U.S. Department of Transportation Federal Highway Administration
City of Seattle

ALASKAN WAY VIADUCT
REPLACEMENT PROJECT
SR 99 BORED TUNNEL
CONTRACT PACKAGE 14

GENERAL DEFINITION
VOUSSOIR GEOMETRY

TS006

SHEET 81 OF 208 SHEETS

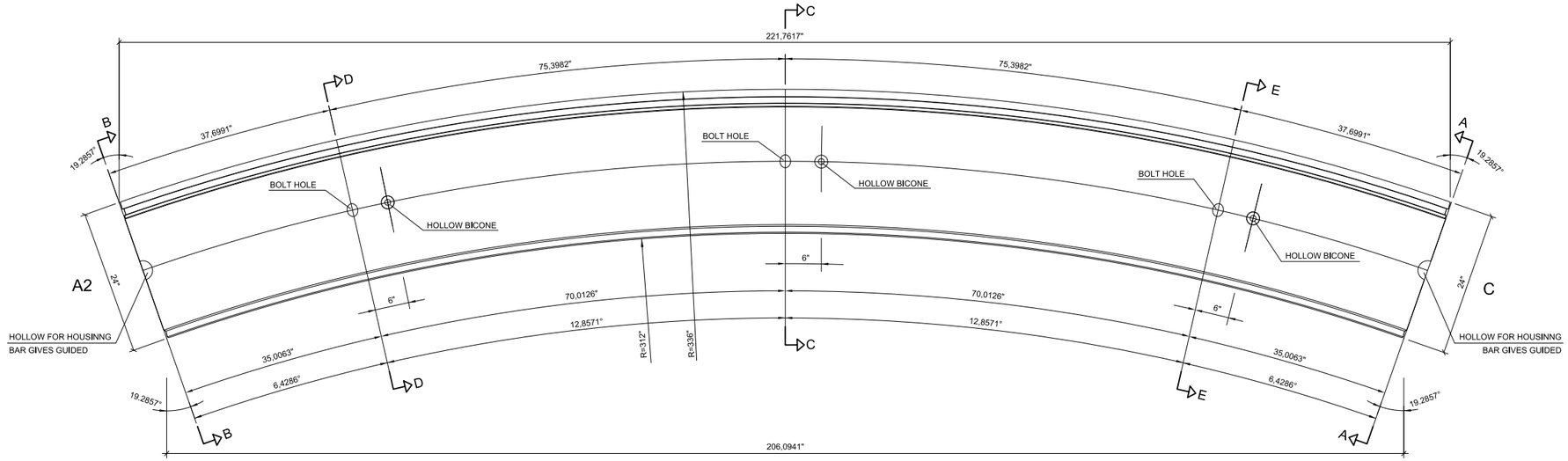

SEGMENT VIEW - A1
(FROM THE SHIELD) Z=0
SCALE A-1= 1/10
A-3= 1/20

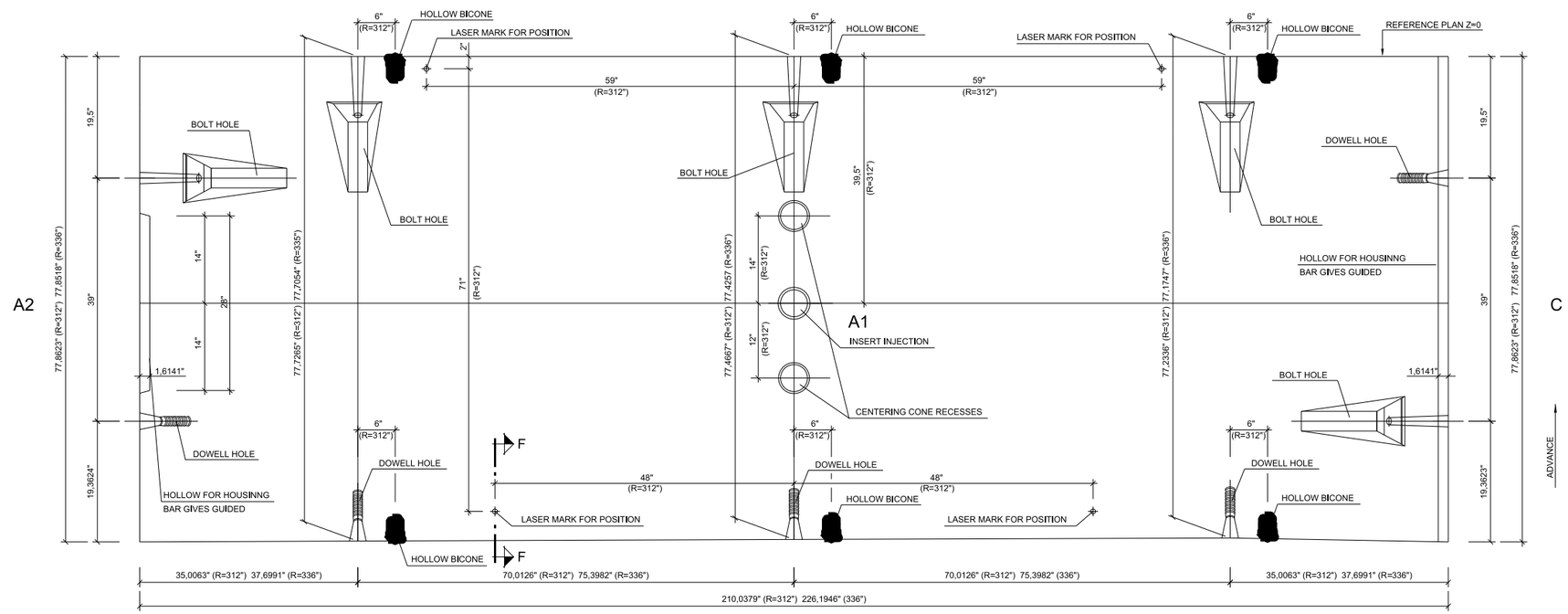

SEGMENT VIEW - A1
INNER FACE DEVELOPMENT
SCALE A-1= 1/10
A-3= 1/20

FILE NAME	IP_PWP:dms69908\46055-Txx-14TS007.DLV				REGION NO.	STATE	FED.AID PROJ.NO.
TIME	19-OCT-2010 15:44				10	WASH	
DATE	19-OCT-2010				JOB NUMBER		
PLOTTED BY	groe						
DESIGNED BY	C. CALVO				CONTRACT NO.		LOCATION NO.
ENTERED BY	C. CALVO						
CHECKED BY	S. TREYGER						
PROJ. ENGR.	S. EVERETT						
REGIONAL ADM.	R. PAANANEN	REVISION	DATE	BY			

SEMYON TREYGER
STATE OF WASHINGTON
20868
STRUCTURAL ENGINEER
PROFESSIONAL ENGINEER

RFP DESIGN
SUBMITTED BY
SEATTLE TUNNEL PARTNERS

NOT FOR CONSTRUCTION

Washington State Department of Transportation
U.S. Department of Transportation Federal Highway Administration
City of Seattle

ALASKAN WAY VIADUCT
REPLACEMENT PROJECT
SR 99 BORED TUNNEL
CONTRACT PACKAGE 14

VOUSSOIR OF MOULDS
VOUSSOIR – A.1

TS007

SHEET 82 OF 208 SHEETS

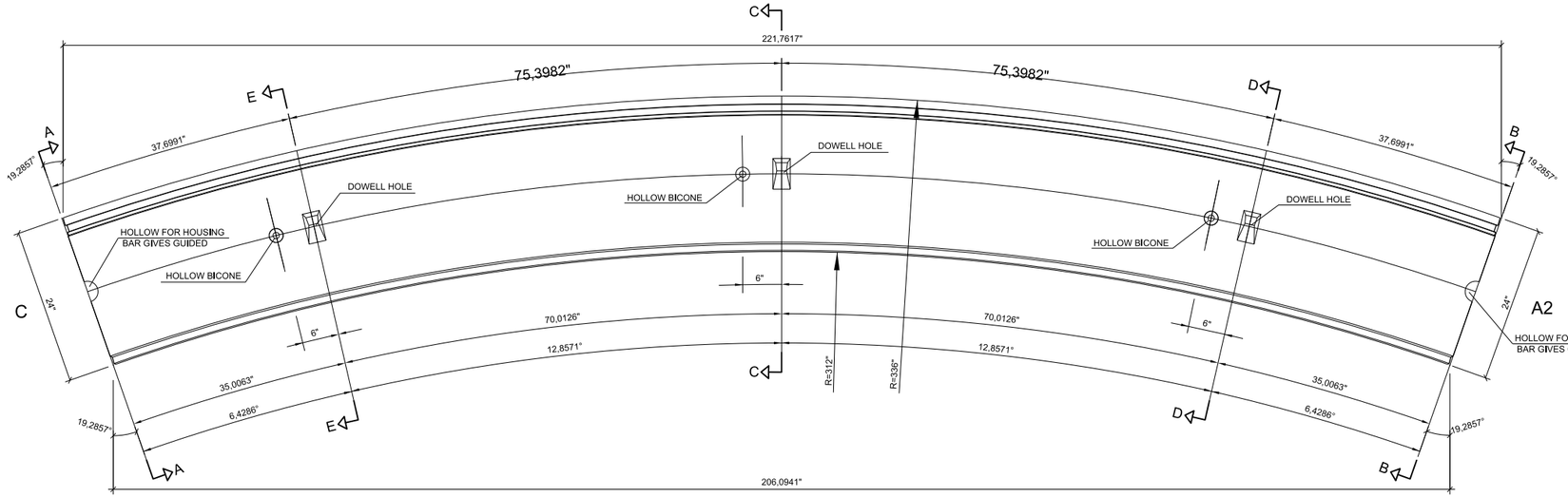

SEGMENT VIEW - A1
(TOWARDS ADVANCE)
SCALE A-1= 1/10
A-3= 1/20

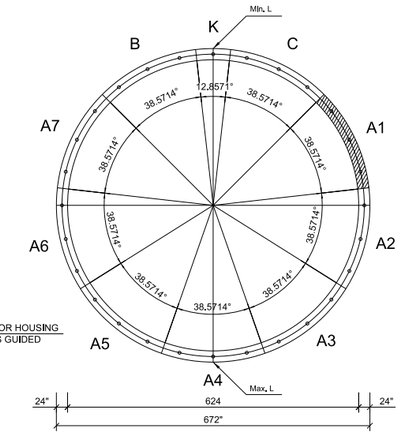

RING DEFINITION
S/E

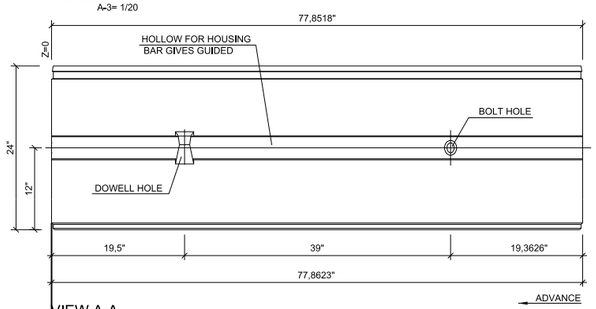

VIEW A-A
SCALE A-1= 1/10
A-3= 1/20

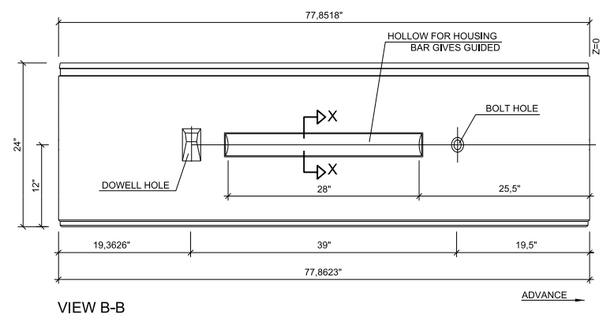

VIEW B-B
SCALE A-1= 1/10
A-3= 1/20

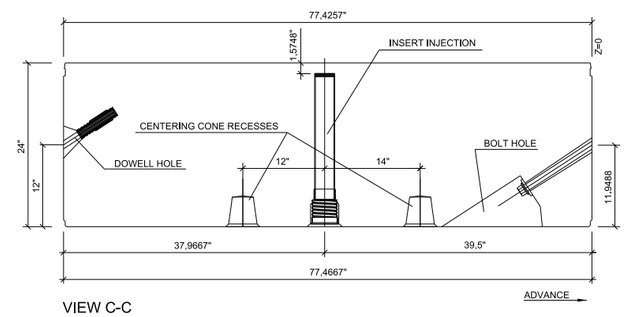

VIEW C-C
SCALE A-1= 1/10
A-3= 1/20

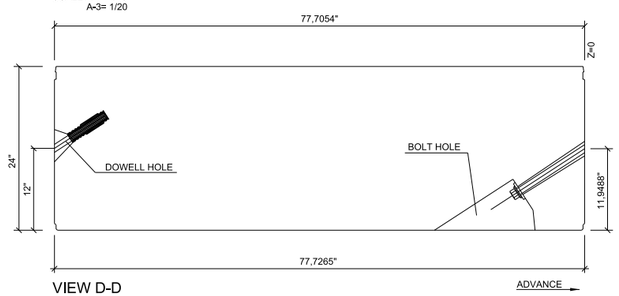

VIEW D-D
SCALE A-1= 1/10
A-3= 1/20

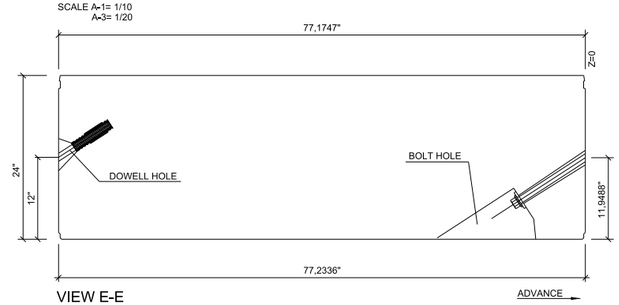

VIEW E-E
SCALE A-1= 1/10
A-3= 1/20

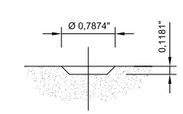

VIEW F-F
SCALE A-1= 1/1

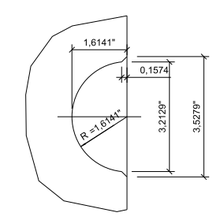

VIEW H-H
HOLLOW FOR HOUSING BAR GIVES GUIDED
SCALE A-1= 1/4
A-3= 1/8

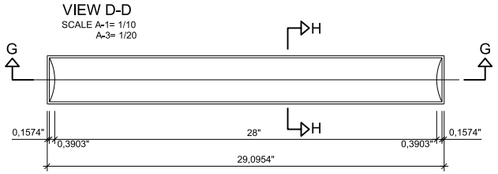

HOLLOW FOR HOUSING BAR GIVES GUIDED
SCALE A-1= 1/5
A-3= 1/10

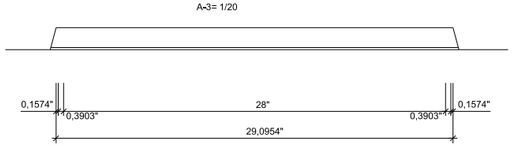

VIEW G-G
SCALE A-1= 1/5
A-3= 1/10

FILE NAME	IP_PWP:dms69908\46055-Txx-14TS008.DLV					
TIME	19-OCT-2010 15:44					
DATE	19-OCT-2010					
PLOTTED BY	groe					
DESIGNED BY	C. CALVO					
ENTERED BY	C. CALVO					
CHECKED BY	S. TREYGER					
PROJ. ENGR.	S. EVERETT					
REGIONAL ADM.	R. PAANANEN	REVISION	DATE	BY		

REGION NO.	STATE	FED.AID PROJ.NO.
10	WASH	
JOB NUMBER		
CONTRACT NO.		LOCATION NO.

SEMYON TREYGER STATE OF WASHINGTON 20868 STRUCTURAL ENGINEER PROFESSIONAL ENGINEER

RFP DESIGN
SUBMITTED BY
SEATTLE TUNNEL PARTNERS

NOT FOR CONSTRUCTION

Washington State Department of Transportation
U.S. Department of Transportation Federal Highway Administration
City of Seattle

ALASKAN WAY VIADUCT
REPLACEMENT PROJECT
SR 99 BORED TUNNEL
CONTRACT PACKAGE 14

VOUSSOIR OF MOULDS
VOUSSOIR – A.1

TS008

SHEET 83 OF 208 SHEETS

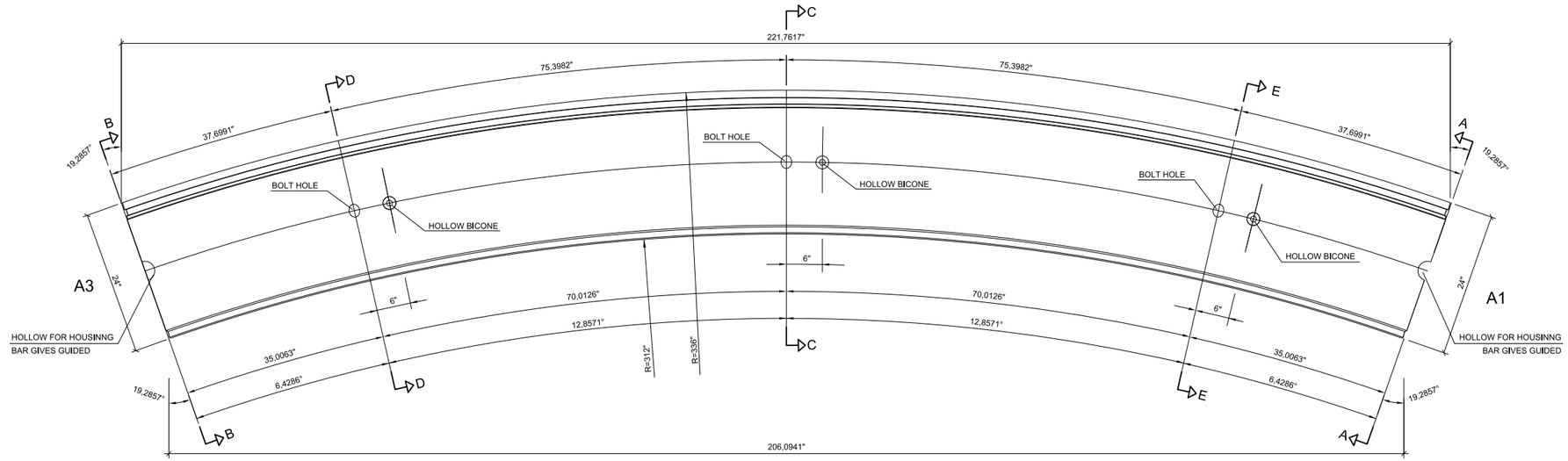

SEGMENT VIEW - A2
(FROM THE SHIELD) Z=0
SCALE A-1= 1/10
A-3= 1/20

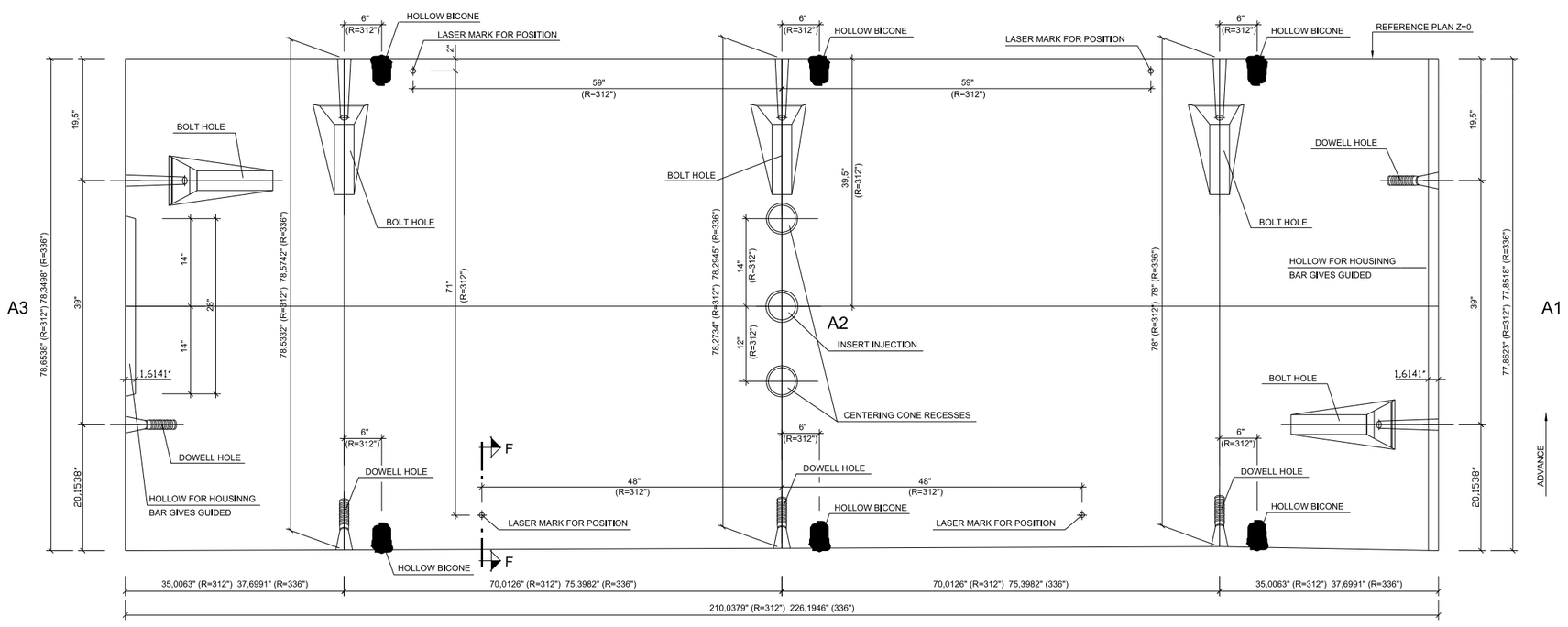

SEGMENT VIEW - A2
INNER FACE DEVELOPMENT
SCALE A-1= 1/10
A-3= 1/20

FILE NAME	IP_PWP:dms69908\46055-Txx-14TS009.DLV				REGION NO. 10	STATE WASH	FED.AID PROJ.NO.
TIME	19-OCT-2010 15:44				JOB NUMBER		
DATE	19-OCT-2010						
PLOTTED BY	groe						
DESIGNED BY	C. CALVO						
ENTERED BY	C. CALVO						
CHECKED BY	S. TREYGER				CONTRACT NO.		LOCATION NO.
PROJ. ENGR.	S. EVERETT						
REGIONAL ADM.	R. PAANANEN	REVISION	DATE	BY			

SEMYON TREYGER STATE OF WASHINGTON 20868 STRUCTURAL ENGINEER PROFESSIONAL ENGINEER

RFP DESIGN
SUBMITTED BY
SEATTLE TUNNEL PARTNERS

NOT FOR CONSTRUCTION

Washington State Department of Transportation
U.S. Department of Transportation Federal Highway Administration
City of Seattle

ALASKAN WAY VIADUCT
REPLACEMENT PROJECT
SR 99 BORED TUNNEL
CONTRACT PACKAGE 14

VOUSSOIR OF MOULDS
VOUSSOIR – A.2

TS009

SHEET 84 OF 208 SHEETS

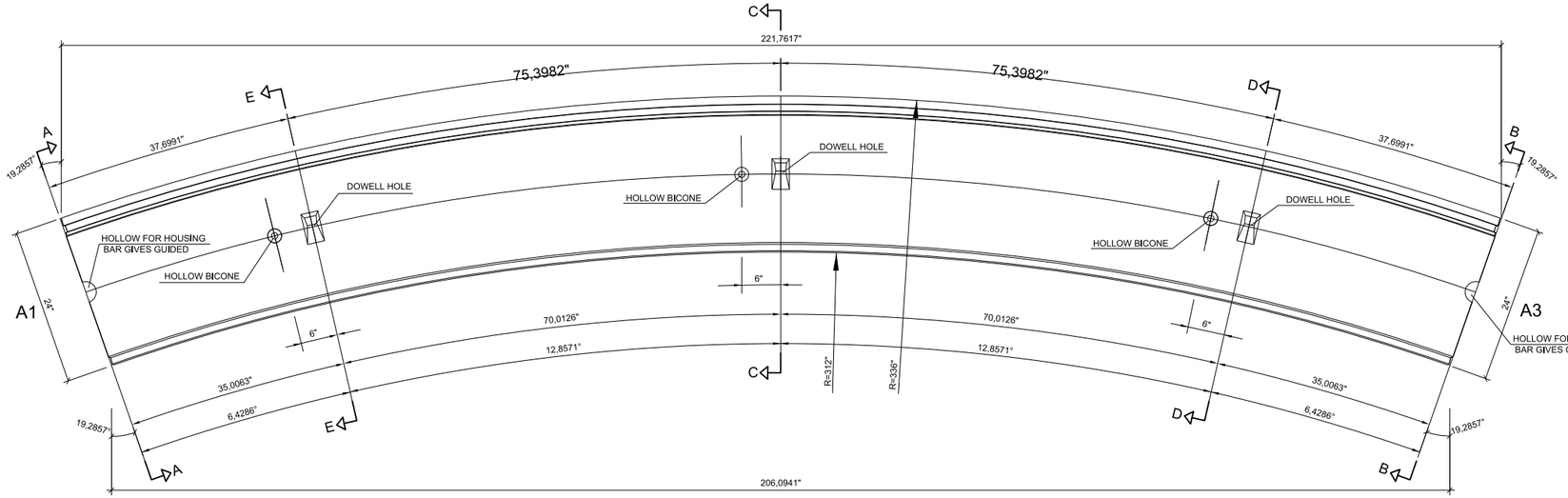

SEGMENT VIEW - A2
(TOWARDS ADVANCE)
SCALE A-1= 1/10
A-3= 1/20

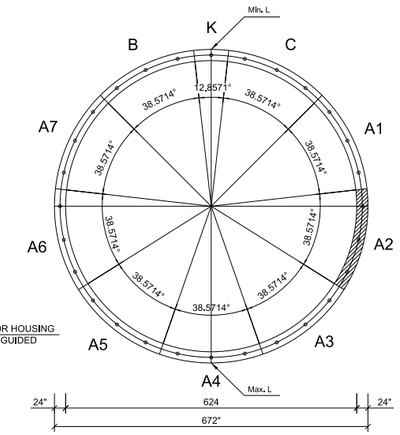

RING DEFINITION
S/E

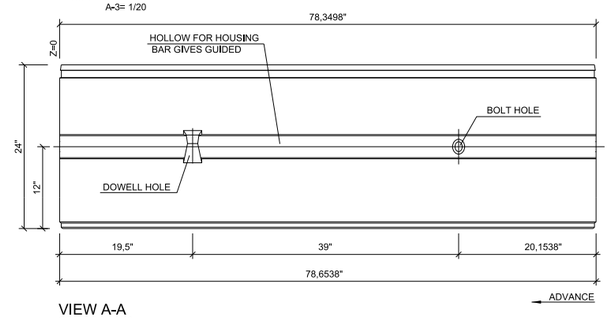

VIEW A-A
SCALE A-1= 1/10
A-3= 1/20

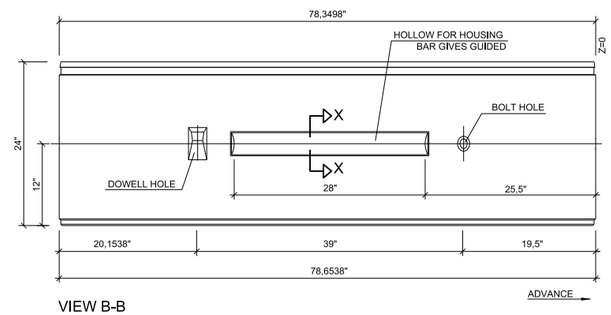

VIEW B-B
SCALE A-1= 1/10
A-3= 1/20

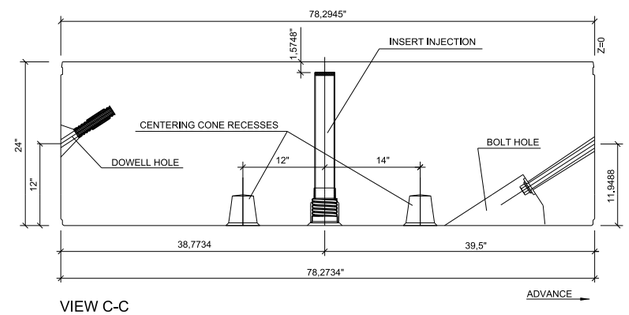

VIEW C-C
SCALE A-1= 1/10
A-3= 1/20

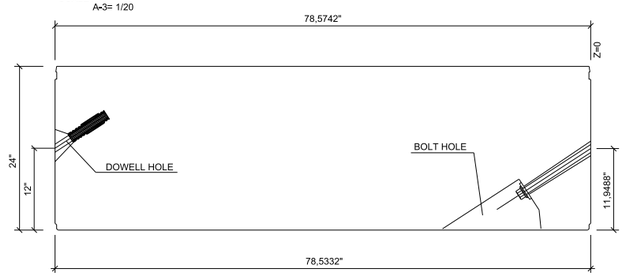

VIEW D-D
SCALE A-1= 1/10
A-3= 1/20

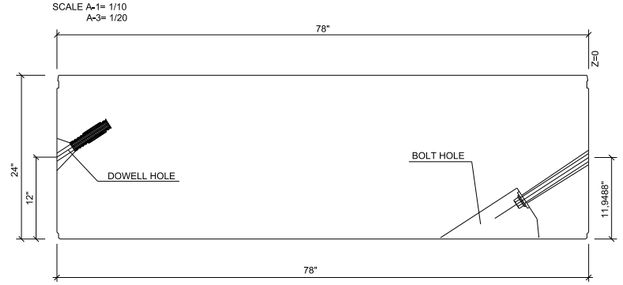

VIEW E-E
SCALE A-1= 1/10
A-3= 1/20

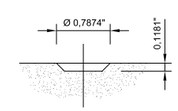

VIEW F-F
SCALE A-1= 1/1

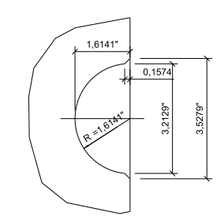

VIEW H-H
HOLLOW FOR HOUSING BAR GIVES GUIDED
SCALE A-1= 1/4
A-3= 1/8

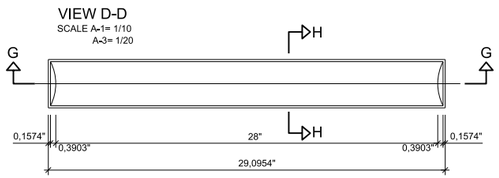

HOLLOW FOR HOUSING BAR GIVES GUIDED
SCALE A-1= 1/5
A-3= 1/10

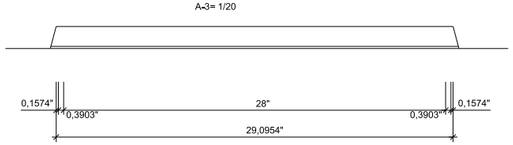

VIEW G-G
SCALE A-1= 1/5
A-3= 1/10

FILE NAME	IP_PWP:dms69908\46055-Txx-14TS010.DLV					
TIME	19-OCT-2010 15:45					
DATE	19-OCT-2010					
PLOTTED BY	groe					
DESIGNED BY	C. CALVO					
ENTERED BY	C. CALVO					
CHECKED BY	S. TREYGER					
PROJ. ENGR.	S. EVERETT					
REGIONAL ADM.	R. PAANANEN	REVISION	DATE	BY		

REGION NO.	STATE	FED.AID PROJ.NO.
10	WASH	
JOB NUMBER		
CONTRACT NO.		LOCATION NO.

SEAL: SEMYON TREYGER — STATE OF WASHINGTON — 20868 — STRUCTURAL ENGINEER — PROFESSIONAL ENGINEER

RFP DESIGN
SUBMITTED BY
SEATTLE TUNNEL PARTNERS

NOT FOR CONSTRUCTION

Washington State Department of Transportation
U.S. Department of Transportation Federal Highway Administration
City of Seattle

ALASKAN WAY VIADUCT
REPLACEMENT PROJECT
SR 99 BORED TUNNEL
CONTRACT PACKAGE 14

VOUSSOIR OF MOULDS
VOUSSOIR – A.2

TS010

SHEET 85 OF 208 SHEETS

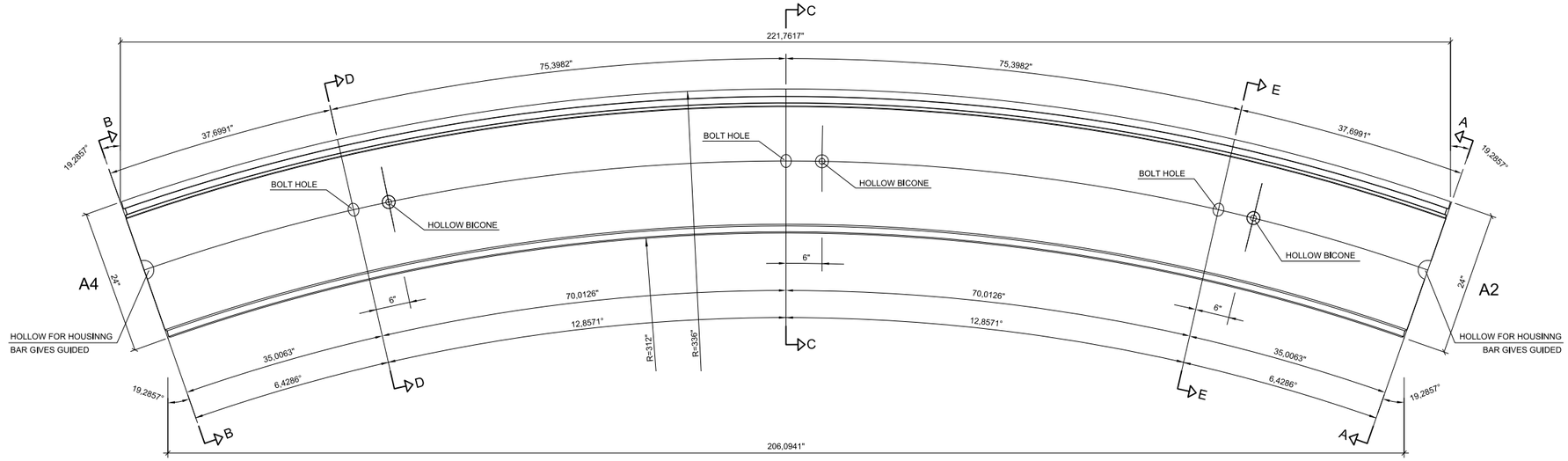

SEGMENT VIEW - A3
(FROM THE SHIELD) Z=0
SCALE A-1= 1/10

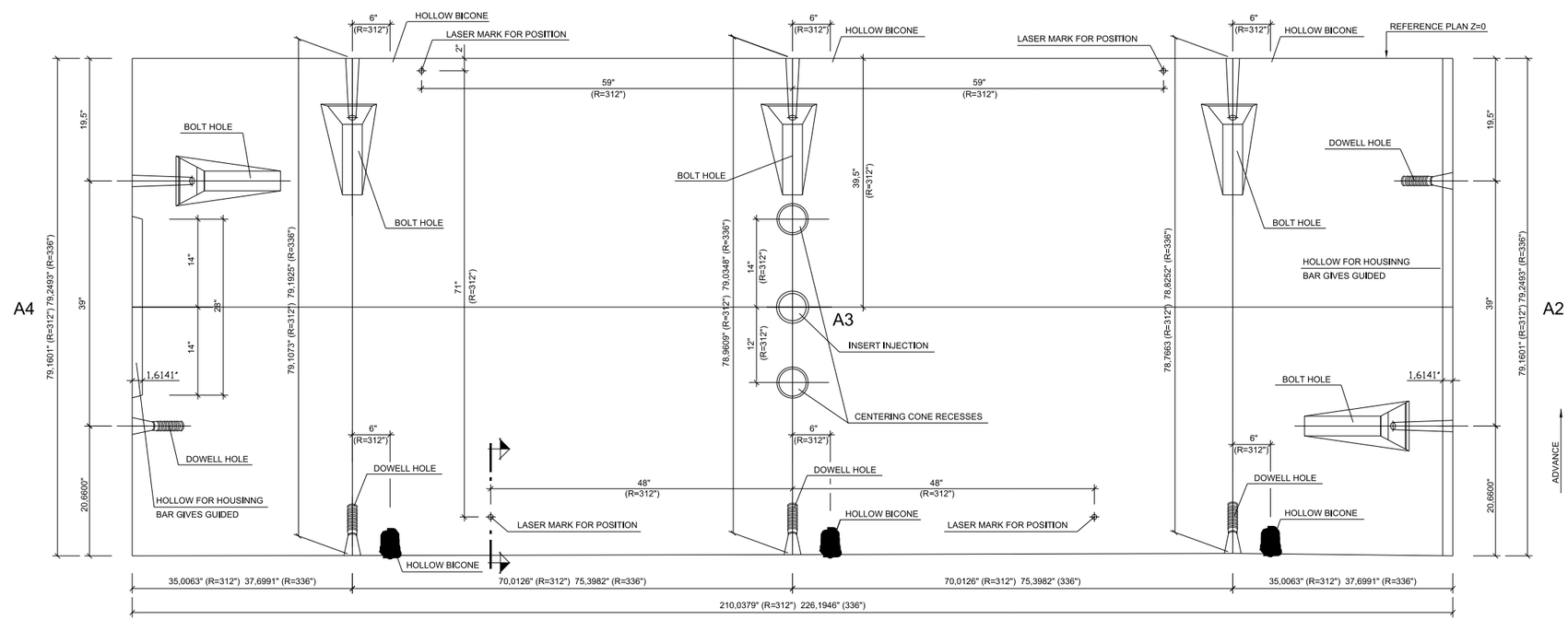

SEGMENT VIEW - A3
INNER FACE DEVELOPMENT
SCALE A-1= 1/10
A-3= 1/20

FILE NAME	IP_PWP:dms69908\46055-Txx-14TS011.DLV				REGION NO.	STATE	FED.AID PROJ.NO.
TIME	19-OCT-2010 15:45				10	WASH	
DATE	19-OCT-2010				JOB NUMBER		
PLOTTED BY	groe						
DESIGNED BY	C. CALVO				CONTRACT NO.		LOCATION NO.
ENTERED BY	C. CALVO						
CHECKED BY	S. TREYGER						
PROJ. ENGR.	S. EVERETT						
REGIONAL ADM.	R. PAANANEN	REVISION	DATE	BY			

SEMYON TREYGER
STATE OF WASHINGTON
20868
STRUCTURAL ENGINEER
PROFESSIONAL ENGINEER

RFP DESIGN
SUBMITTED BY
SEATTLE TUNNEL PARTNERS

NOT FOR CONSTRUCTION

Washington State Department of Transportation
U.S. Department of Transportation Federal Highway Administration
City of Seattle

ALASKAN WAY VIADUCT
REPLACEMENT PROJECT
SR 99 BORED TUNNEL
CONTRACT PACKAGE 14

VOUSSOIR OF MOULDS
VOUSSOIR – A.3

TS011

SHEET 86 OF 208 SHEETS

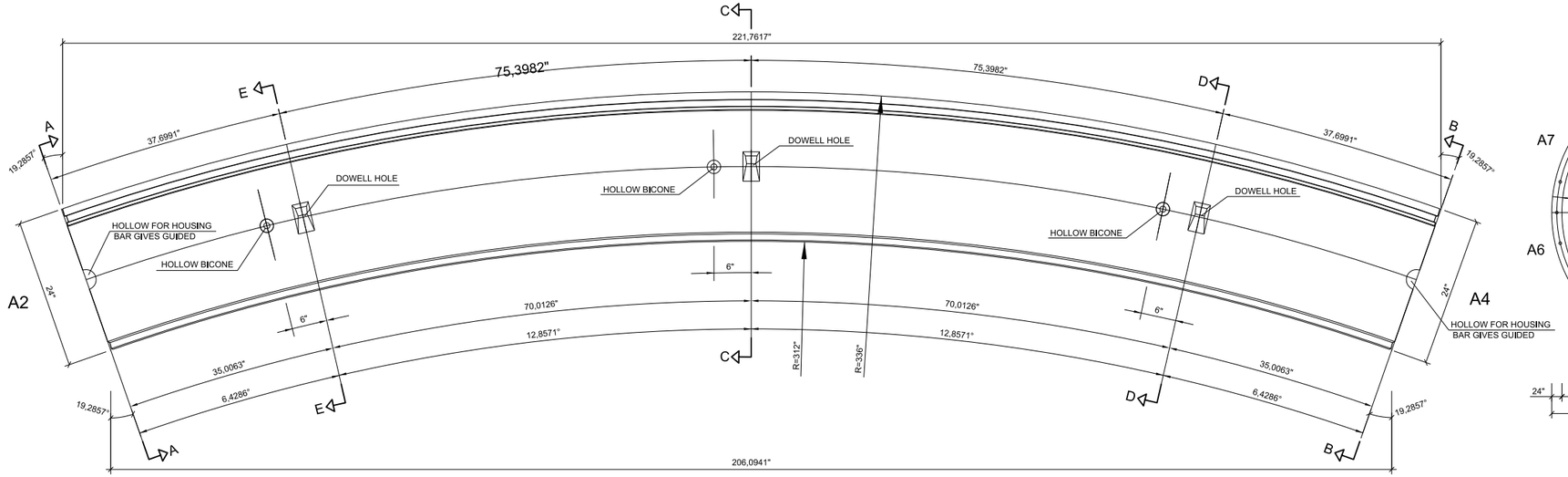

SEGMENT VIEW - A3
(TOWARDS ADVANCE)
SCALE A-1= 1/10
A-3= 1/20

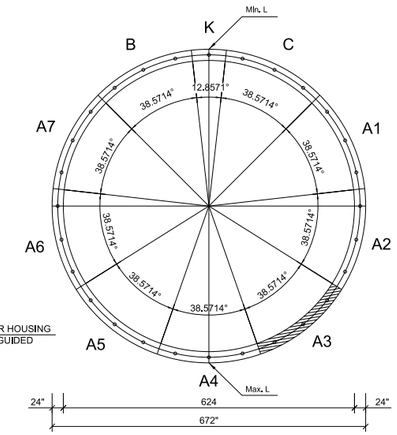

RING DEFINITION
S/E

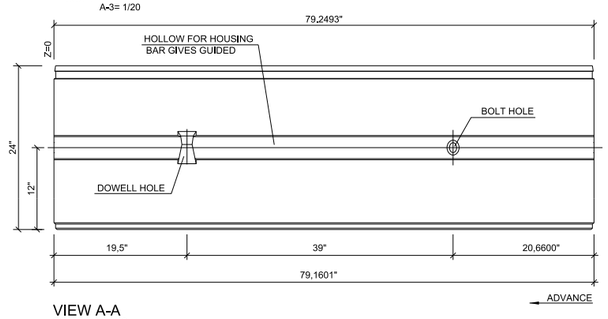

VIEW A-A
SCALE A-1= 1/10
A-3= 1/20

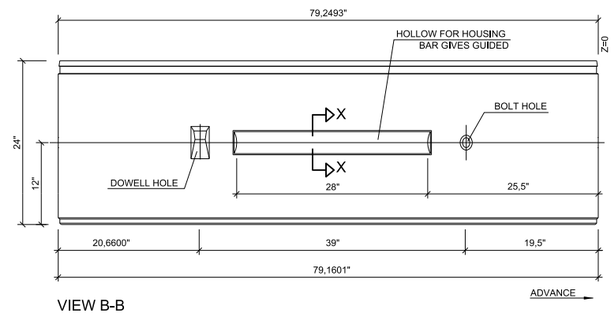

VIEW B-B
SCALE A-1= 1/10
A-3= 1/20

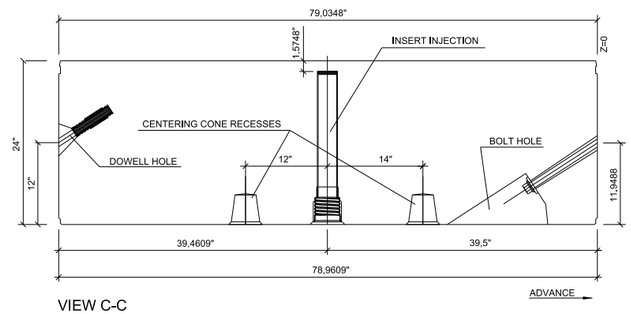

VIEW C-C
SCALE A-1= 1/10
A-3= 1/20

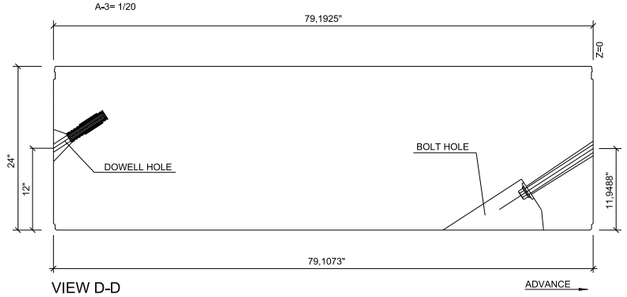

VIEW D-D
SCALE A-1= 1/10
A-3= 1/20

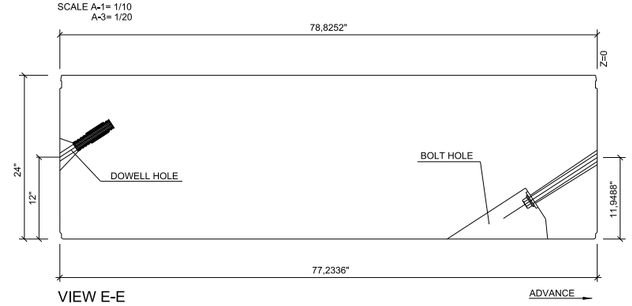

VIEW E-E
SCALE A-1= 1/10
A-3= 1/20

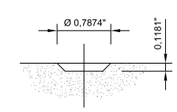

VIEW F-F
SCALE A-1= 1/1

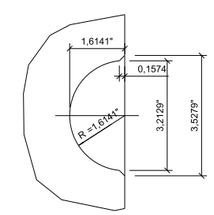

VIEW H-H
HOLLOW FOR HOUSING BAR GIVES GUIDED
SCALE A-1= 1/4
A-3= 1/8

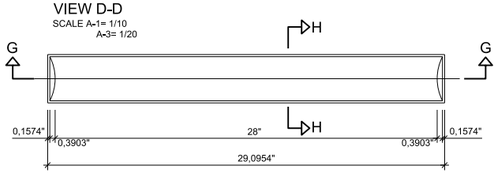

HOLLOW FOR HOUSING BAR GIVES GUIDED
SCALE A-1= 1/5
A-3= 1/10

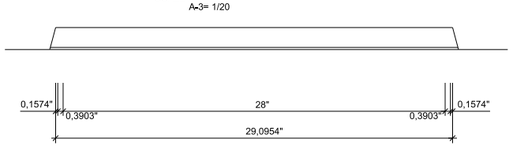

VIEW G-G
SCALE A-1= 1/5
A-3= 1/10

FILE NAME	IP_PWP:dms69908\46055-Txx-14TS012.DLV					
TIME	19-OCT-2010 15:45					
DATE	19-OCT-2010					
PLOTTED BY	groe					
DESIGNED BY	C. CALVO					
ENTERED BY	C. CALVO					
CHECKED BY	S. TREYGER					
PROJ. ENGR.	S. EVERETT					
REGIONAL ADM.	R. PAANANEN	REVISION	DATE	BY		

REGION NO.	STATE	FED.AID PROJ.NO.
10	WASH	
JOB NUMBER		
CONTRACT NO.		LOCATION NO.

SEAL: SEMYON TREYGER, STATE OF WASHINGTON, 20868, STRUCTURAL ENGINEER, PROFESSIONAL ENGINEER

RFP DESIGN
SUBMITTED BY
SEATTLE TUNNEL PARTNERS

NOT FOR CONSTRUCTION

Washington State Department of Transportation
U.S. Department of Transportation Federal Highway Administration
City of Seattle

ALASKAN WAY VIADUCT
REPLACEMENT PROJECT
SR 99 BORED TUNNEL
CONTRACT PACKAGE 14

VOUSSOIR OF MOULDS
VOUSSOIR – A.3

TS012

SHEET 87 OF 208 SHEETS

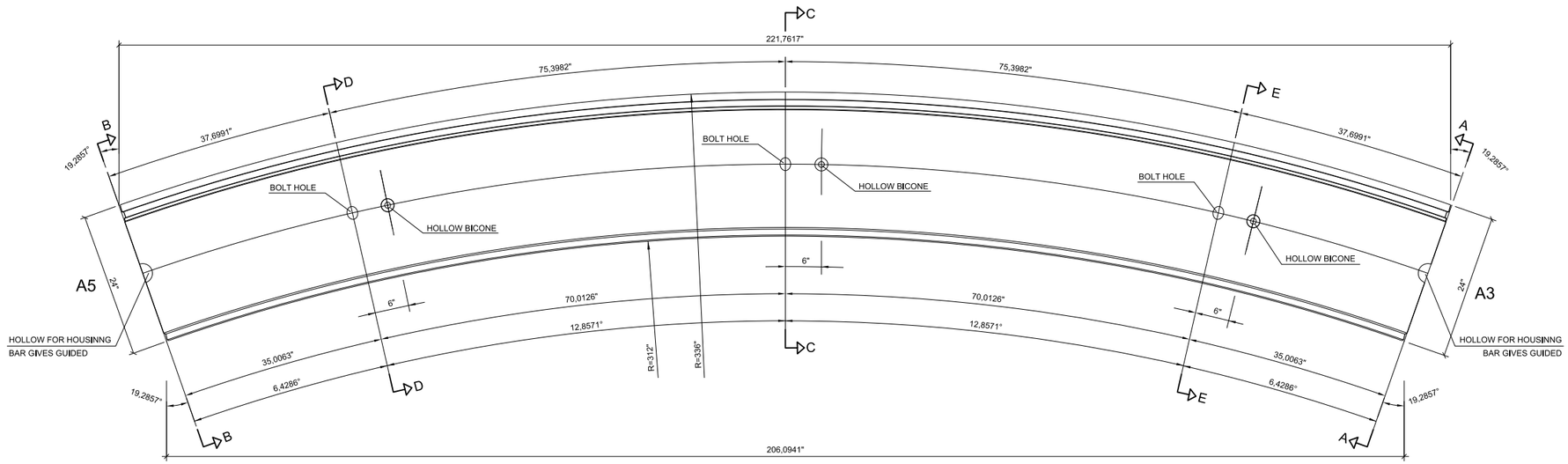

SEGMENT VIEW - A4
(FROM THE SHIELD) Z=0
SCALE A-1= 1/10
A-3= 1/20

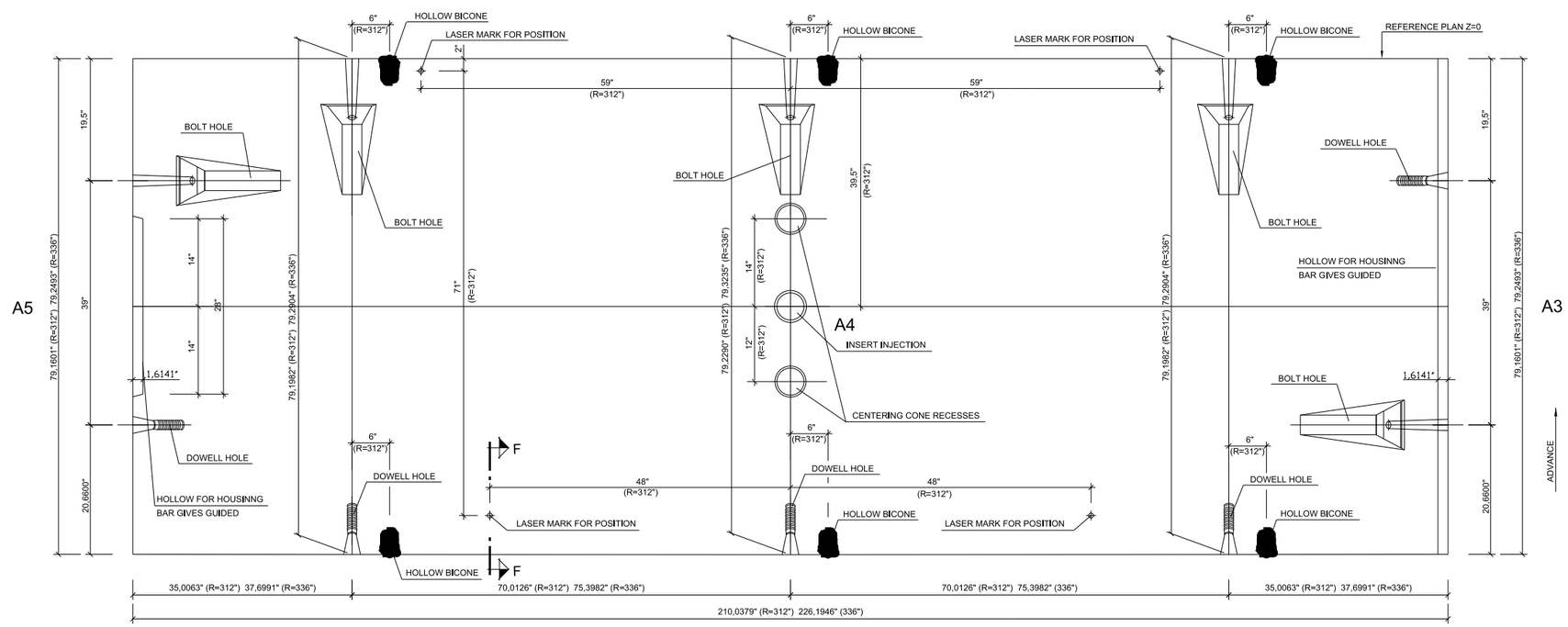

SEGMENT VIEW - A4
INNER FACE DEVELOPMENT
SCALE A-1= 1/10
A-3= 1/20

FILE NAME	IP_PWP:dms69908\46055-Txx-14TS013.DLV				REGION NO.	STATE	FED.AID PROJ.NO.
TIME	19-OCT-2010 15:45				10	WASH	
DATE	19-OCT-2010				JOB NUMBER		
PLOTTED BY	groe						
DESIGNED BY	C. CALVO				CONTRACT NO.		LOCATION NO.
ENTERED BY	C. CALVO						
CHECKED BY	S. TREYGER						
PROJ. ENGR.	S. EVERETT						
REGIONAL ADM.	R. PAANANEN	REVISION	DATE	BY			

SEAMYON TREYGER
STATE OF WASHINGTON
20868
STRUCTURAL ENGINEER
PROFESSIONAL ENGINEER

RFP DESIGN
SUBMITTED BY
SEATTLE TUNNEL PARTNERS

NOT FOR CONSTRUCTION

Washington State Department of Transportation
U.S. Department of Transportation Federal Highway Administration
City of Seattle

ALASKAN WAY VIADUCT
REPLACEMENT PROJECT
SR 99 BORED TUNNEL
CONTRACT PACKAGE 14

VOUSSOIR OF MOULDS
VOUSSOIR – A.4

TS013

SHEET 88 OF 208 SHEETS

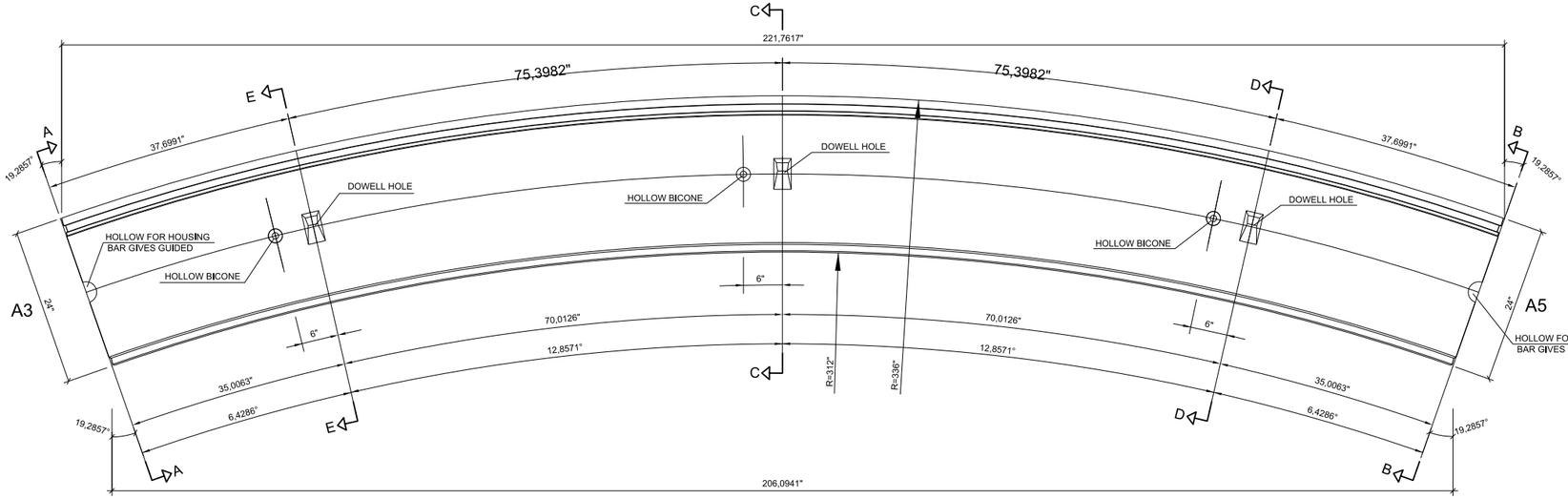

SEGMENT VIEW - A4
(TOWARDS ADVANCE)
SCALE A-1= 1/10
A-3= 1/20

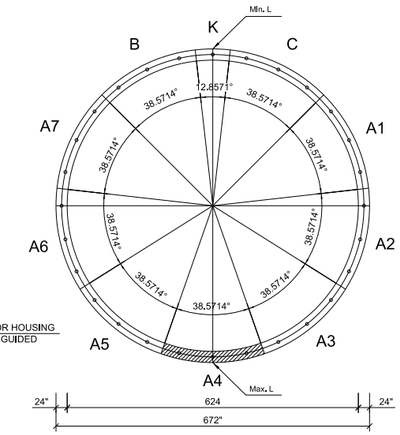

RING DEFINITION
S/E

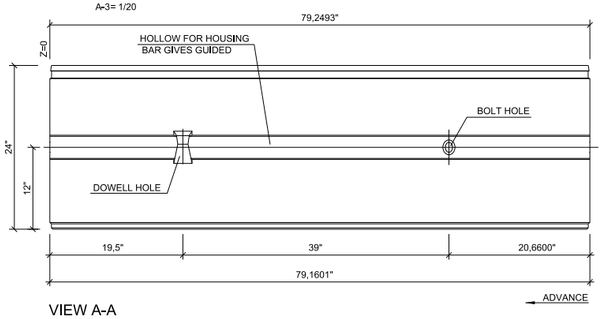

VIEW A-A
SCALE A-1= 1/10
A-3= 1/20

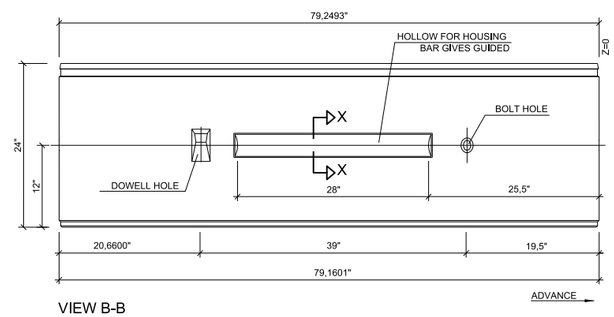

VIEW B-B
SCALE A-1= 1/10
A-3= 1/20

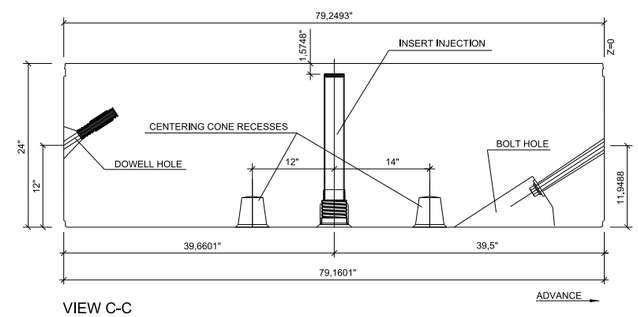

VIEW C-C
SCALE A-1= 1/10
A-3= 1/20

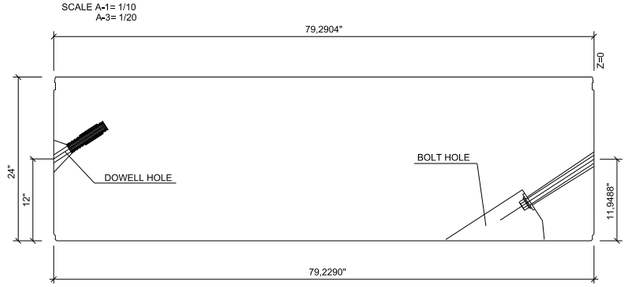

VIEW D-D
SCALE A-1= 1/10
A-3= 1/20

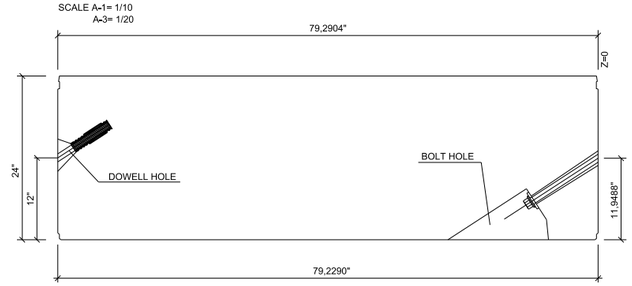

VIEW E-E
SCALE A-1= 1/10
A-3= 1/20

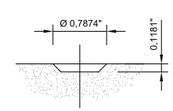

VIEW F-F
SCALE A-1= 1/1

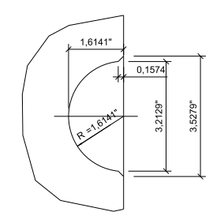

VIEW H-H
HOLLOW FOR HOUSING BAR GIVES GUIDED
SCALE A-1= 1/4
A-3= 1/8

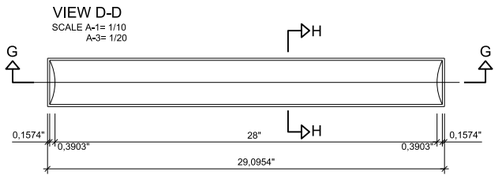

HOLLOW FOR HOUSING BAR GIVES GUIDED
SCALE A-1= 1/5
A-3= 1/10

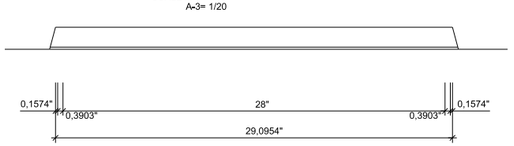

VIEW G-G
SCALE A-1= 1/5
A-3= 1/10

FILE NAME	IP_PWP:dms69908\46055-Txx-14TS014.DLV				REGION NO.	STATE	FED.AID PROJ.NO.
TIME	19-OCT-2010 15:46				10	WASH	
DATE	19-OCT-2010				JOB NUMBER		
PLOTTED BY	groe						
DESIGNED BY	C. CALVO				CONTRACT NO.		LOCATION NO.
ENTERED BY	C. CALVO						
CHECKED BY	S. TREYGER						
PROJ. ENGR.	S. EVERETT						
REGIONAL ADM.	R. PAANANEN	REVISION	DATE	BY			

SEMYON TREYGER STATE OF WASHINGTON 20868 STRUCTURAL ENGINEER PROFESSIONAL ENGINEER

RFP DESIGN
SUBMITTED BY
SEATTLE TUNNEL PARTNERS

NOT FOR CONSTRUCTION

Washington State Department of Transportation
U.S. Department of Transportation Federal Highway Administration
City of Seattle

ALASKAN WAY VIADUCT
REPLACEMENT PROJECT
SR 99 BORED TUNNEL
CONTRACT PACKAGE 14

VOUSSOIR OF MOULDS
VOUSSOIR – A.4

TS014

SHEET 89 OF 208 SHEETS

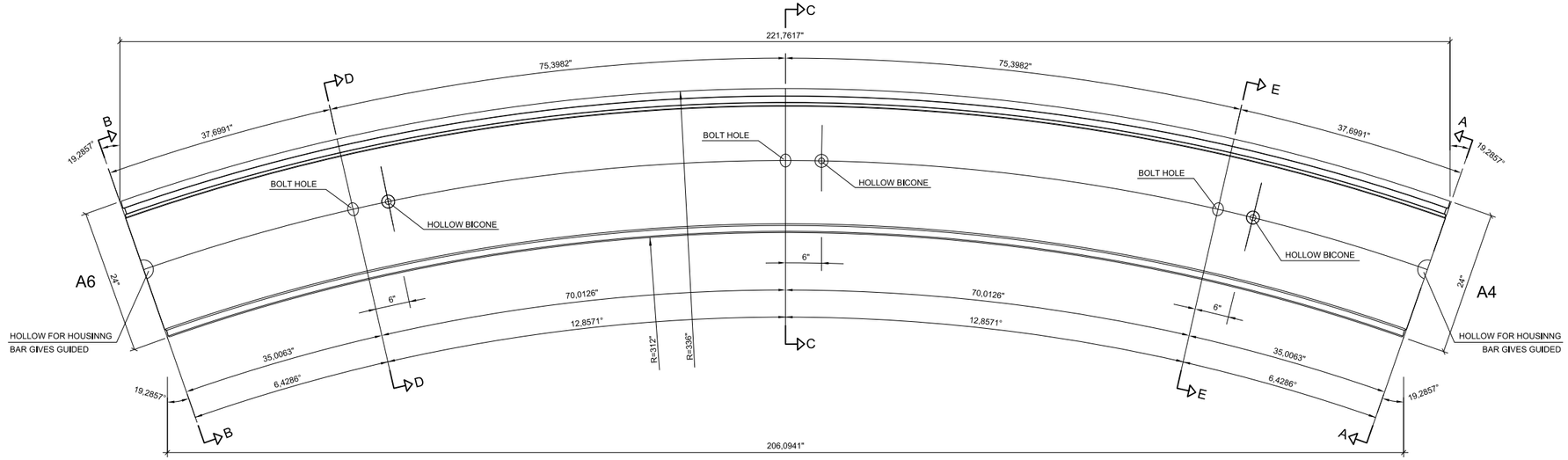

SEGMENT VIEW - A5
(FROM THE SHIELD) Z=0
SCALE A-1= 1/10
A-3= 1/20

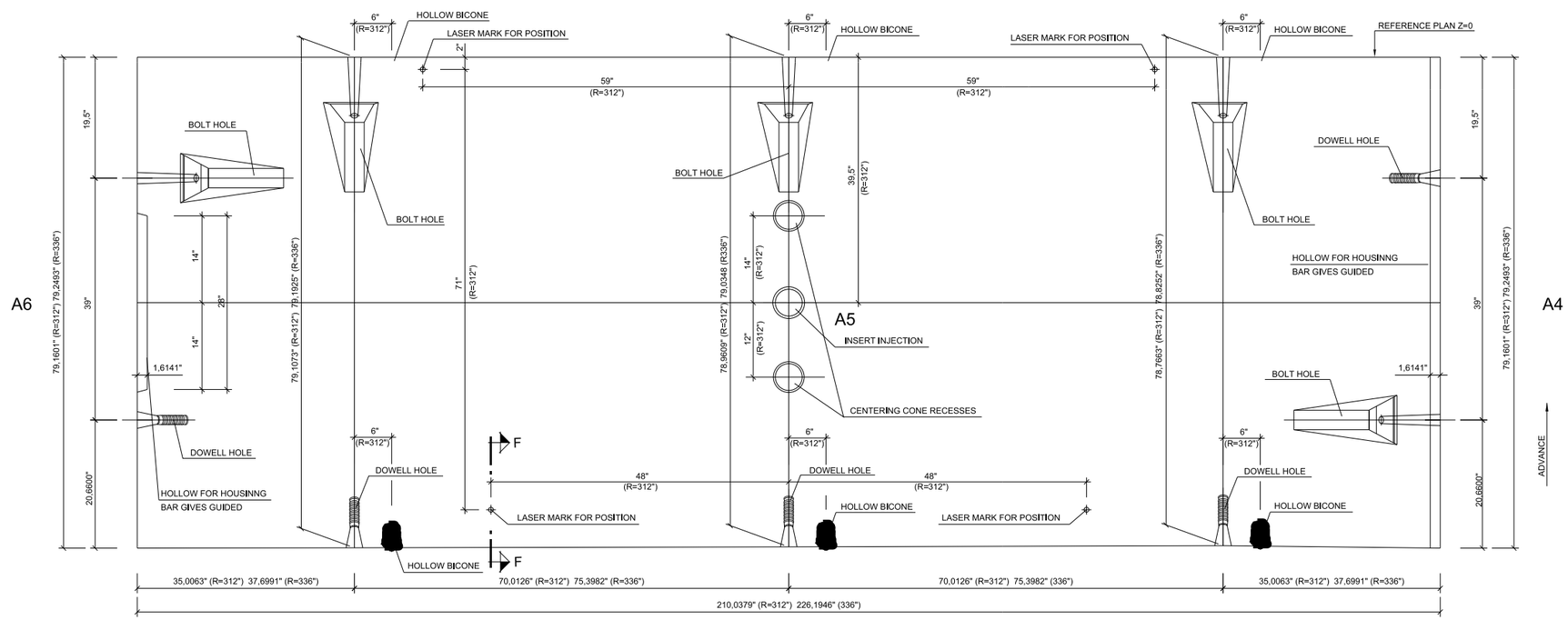

SEGMENT VIEW - A5
INNER FACE DEVELOPMENT
SCALE A-1= 1/10
A-3= 1/20

FILE NAME	IP_PWP:dms69908\46055-Txx-14TS015.DLV				REGION NO.	STATE	FED.AID PROJ.NO.
TIME	19-OCT-2010 15:46				10	WASH	
DATE	19-OCT-2010				JOB NUMBER		
PLOTTED BY	groe						
DESIGNED BY	C. CALVO				CONTRACT NO.		LOCATION NO.
ENTERED BY	C. CALVO						
CHECKED BY	S. TREYGER						
PROJ. ENGR.	S. EVERETT						
REGIONAL ADM.	R. PAANANEN	REVISION	DATE	BY			

SEMYON TREYGER STATE OF WASHINGTON 20868 STRUCTURAL ENGINEER PROFESSIONAL ENGINEER

RFP DESIGN
SUBMITTED BY
SEATTLE TUNNEL PARTNERS

NOT FOR CONSTRUCTION

Washington State Department of Transportation
U.S. Department of Transportation Federal Highway Administration
City of Seattle

ALASKAN WAY VIADUCT
REPLACEMENT PROJECT
SR 99 BORED TUNNEL
CONTRACT PACKAGE 14

VOUSSOIR OF MOULDS
VOUSSOIR – A.5

TS015

SHEET 90 OF 208 SHEETS

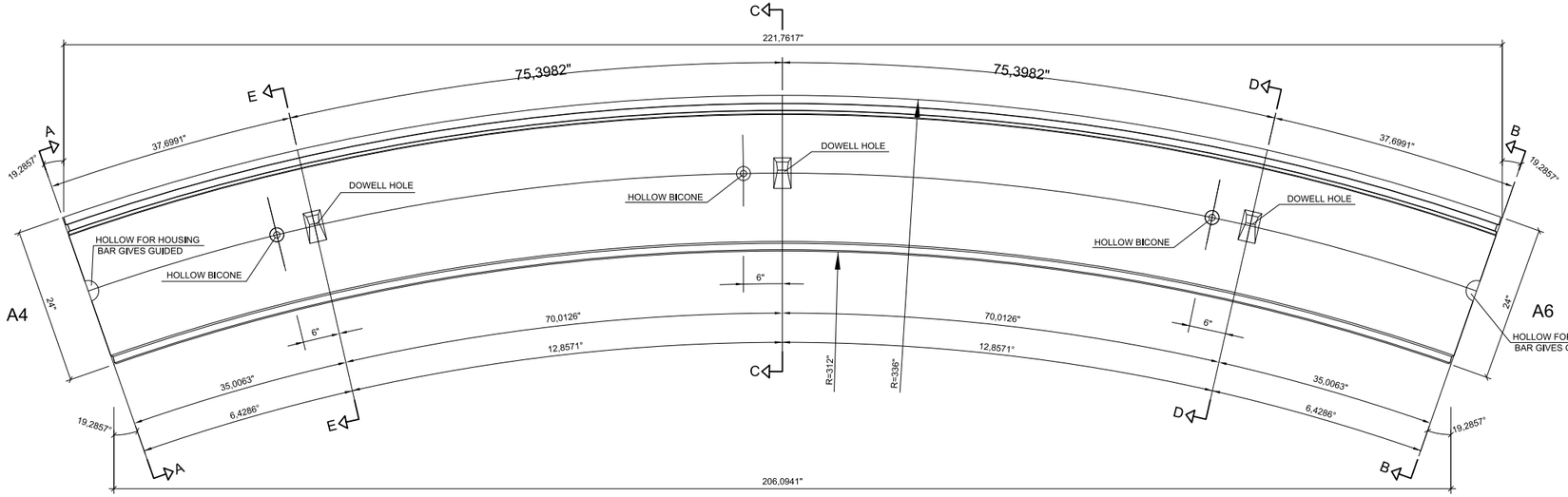

SEGMENT VIEW - A5
(TOWARDS ADVANCE)
SCALE A-1= 1/10
A-3= 1/20

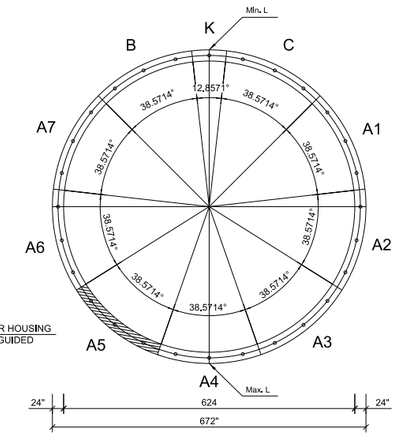

RING DEFINITION
S/E

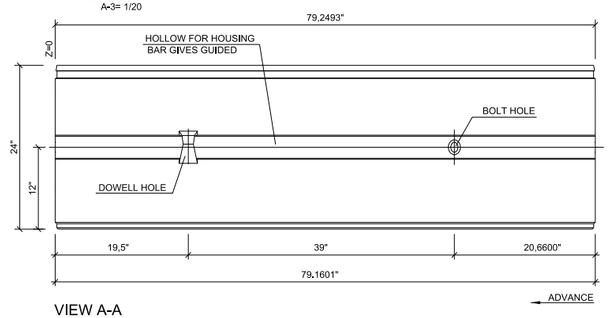

VIEW A-A
SCALE A-1= 1/10
A-3= 1/20

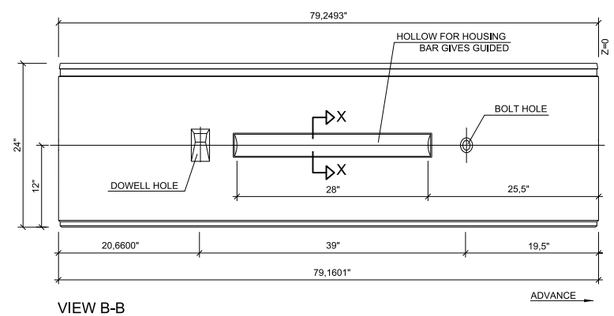

VIEW B-B
SCALE A-1= 1/10
A-3= 1/20

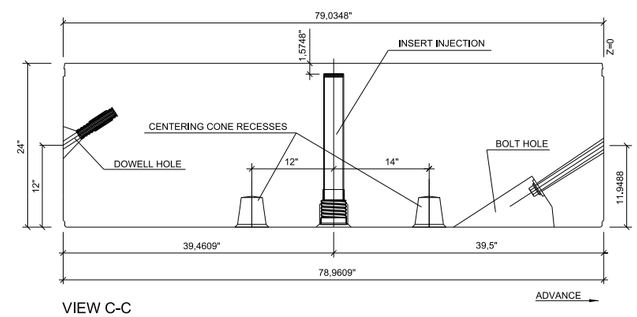

VIEW C-C
SCALE A-1= 1/10
A-3= 1/20

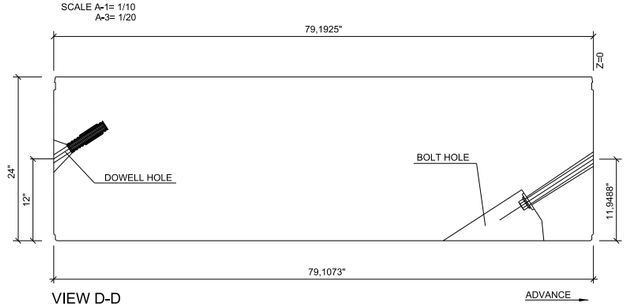

VIEW D-D
SCALE A-1= 1/10
A-3= 1/20

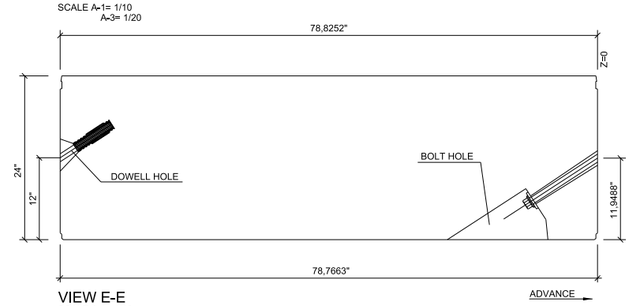

VIEW E-E
SCALE A-1= 1/10
A-3= 1/20

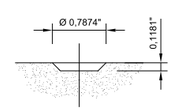

VIEW F-F
SCALE A-1= 1/1

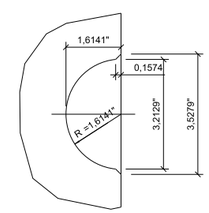

VIEW H-H
HOLLOW FOR HOUSING BAR GIVES GUIDED
SCALE A-1= 1/4
A-3= 1/8

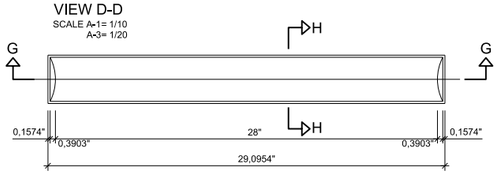

HOLLOW FOR HOUSING BAR GIVES GUIDED
SCALE A-1= 1/5
A-3= 1/10

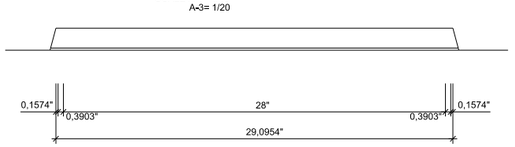

VIEW G-G
SCALE A-1= 1/5
A-3= 1/10

FILE NAME	IP_PWP:dms69908\46055-Txx-14TS016.DLV				REGION NO.	STATE	FED.AID PROJ.NO.
TIME	19-OCT-2010 15:46				10	WASH	
DATE	19-OCT-2010				JOB NUMBER		
PLOTTED BY	groe						
DESIGNED BY	C. CALVO				CONTRACT NO.		LOCATION NO.
ENTERED BY	C. CALVO						
CHECKED BY	S. TREYGER						
PROJ. ENGR.	S. EVERETT						
REGIONAL ADM.	R. PAANANEN	REVISION	DATE	BY			

SEMYON TREYGER STATE OF WASHINGTON 20868 STRUCTURAL ENGINEER PROFESSIONAL ENGINEER

RFP DESIGN
SUBMITTED BY
SEATTLE TUNNEL PARTNERS

NOT FOR CONSTRUCTION

Washington State Department of Transportation
U.S. Department of Transportation Federal Highway Administration
City of Seattle

ALASKAN WAY VIADUCT
REPLACEMENT PROJECT
SR 99 BORED TUNNEL
CONTRACT PACKAGE 14

VOUSSOIR OF MOULDS
VOUSSOIR – A.5

TS016

SHEET 91 OF 208 SHEETS

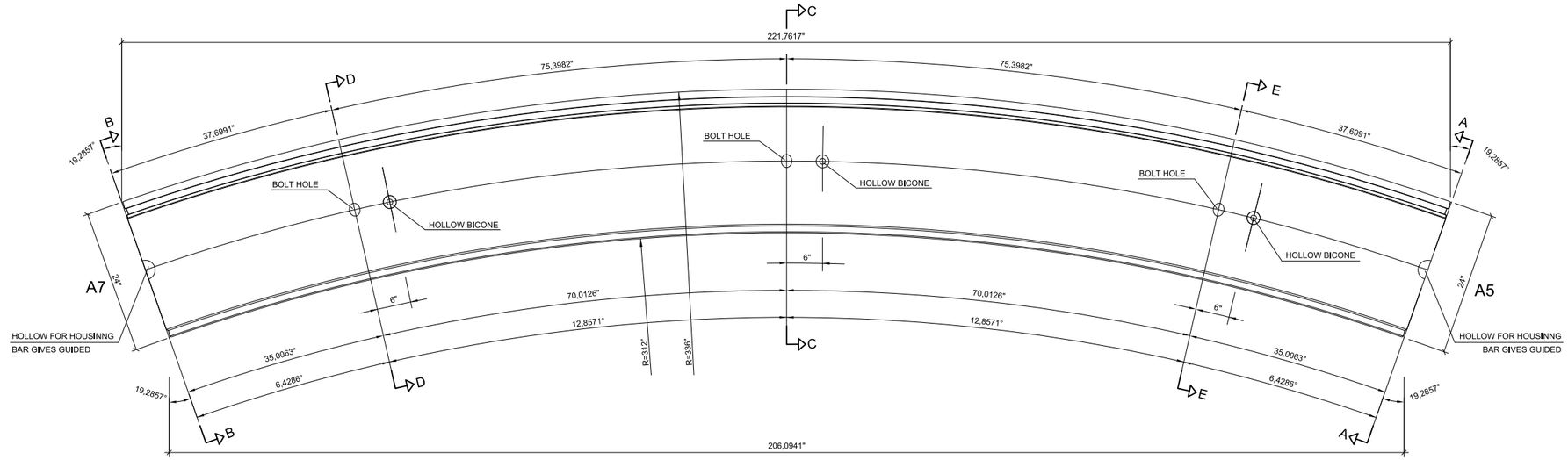

SEGMENT VIEW - A6
(FROM THE SHIELD) Z=0
SCALE A-1= 1/10
A-3= 1/20

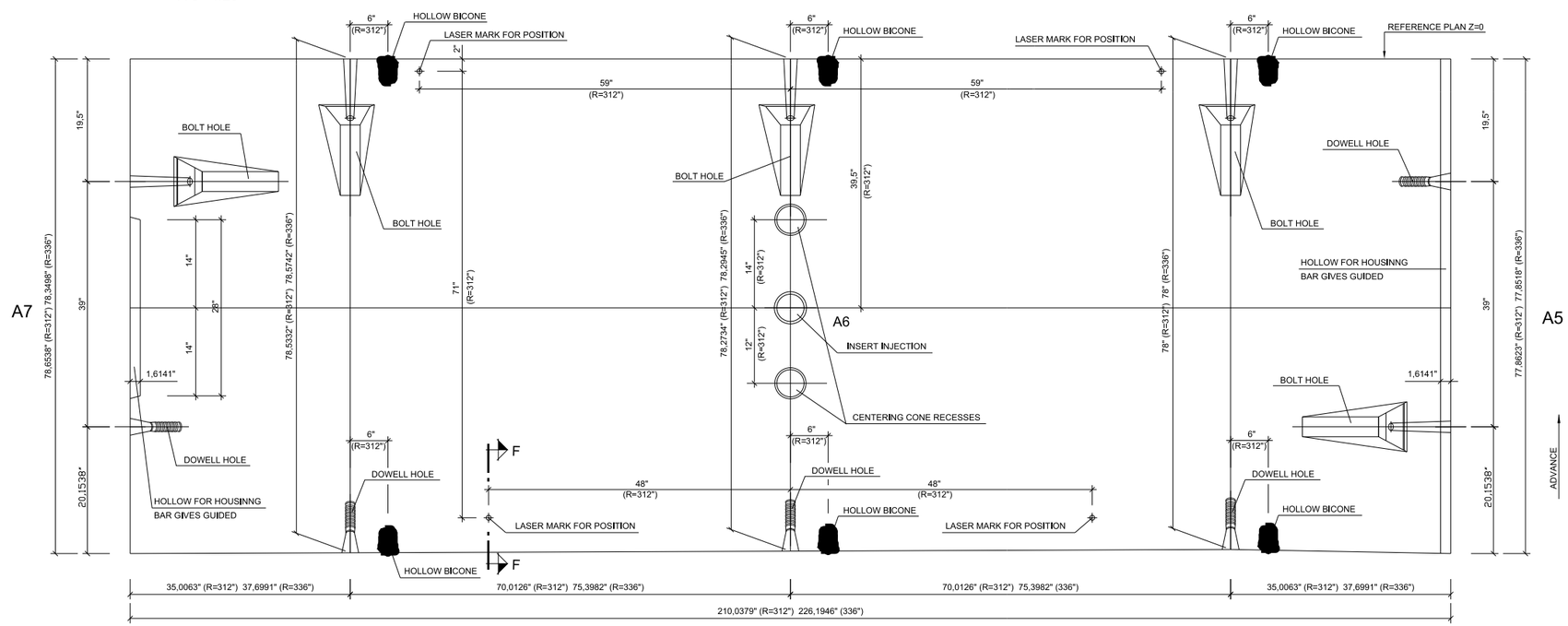

SEGMENT VIEW - A6
INNER FACE DEVELOPMENT
SCALE A-1= 1/10
A-3= 1/20

FILE NAME	IP_PWP:dms69908\46055-Txx-14TS017.DLV					
TIME	19-OCT-2010 15:47					
DATE	19-OCT-2010					
PLOTTED BY	groe					
DESIGNED BY	C. CALVO					
ENTERED BY	C. CALVO					
CHECKED BY	S. TREYGER					
PROJ. ENGR.	S. EVERETT					
REGIONAL ADM.	R. PAANANEN	REVISION	DATE	BY		

REGION NO.	STATE	FED.AID PROJ.NO.
10	WASH	
JOB NUMBER		
CONTRACT NO.		LOCATION NO.

SEMYON TREYGER STATE OF WASHINGTON 20868 STRUCTURAL ENGINEER PROFESSIONAL ENGINEER

RFP DESIGN
SUBMITTED BY
SEATTLE TUNNEL PARTNERS

NOT FOR CONSTRUCTION

Washington State Department of Transportation
U.S. Department of Transportation Federal Highway Administration
City of Seattle

ALASKAN WAY VIADUCT
REPLACEMENT PROJECT
SR 99 BORED TUNNEL
CONTRACT PACKAGE 14

VOUSSOIR OF MOULDS
VOUSSOIR – A.6

TS017

SHEET 92 OF 208 SHEETS

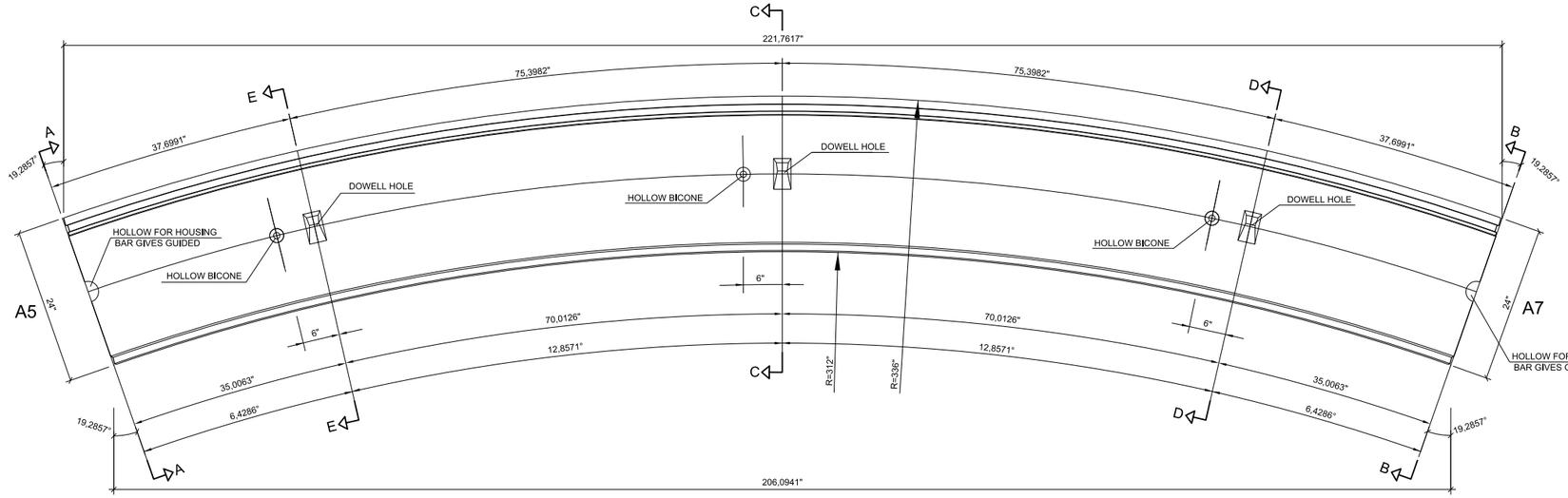

SEGMENT VIEW - A6
(TOWARDS ADVANCE)
SCALE A-1= 1/10
A-3= 1/20

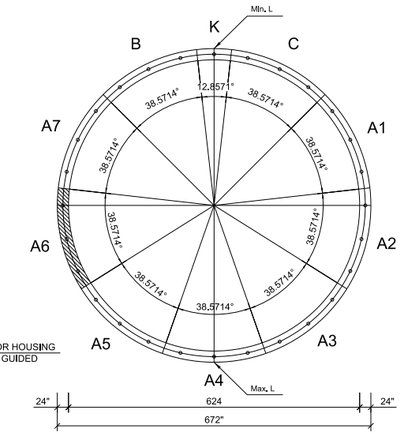

RING DEFINITION
S/E

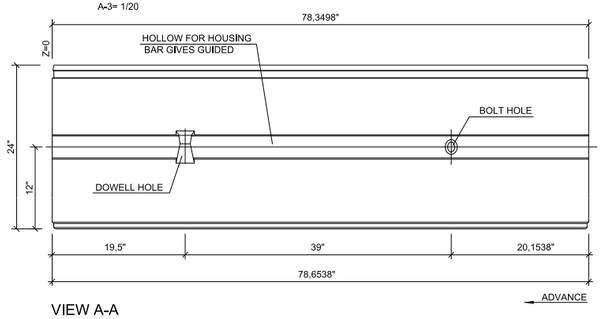

VIEW A-A
SCALE A-1= 1/10
A-3= 1/20

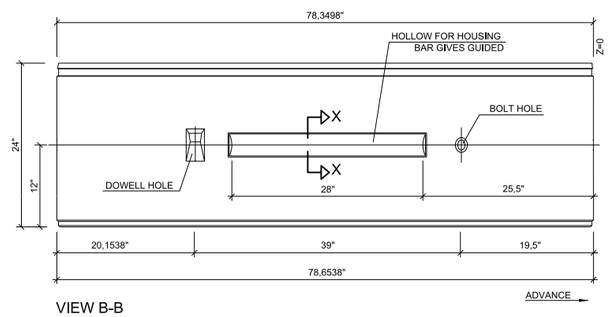

VIEW B-B
SCALE A-1= 1/10
A-3= 1/20

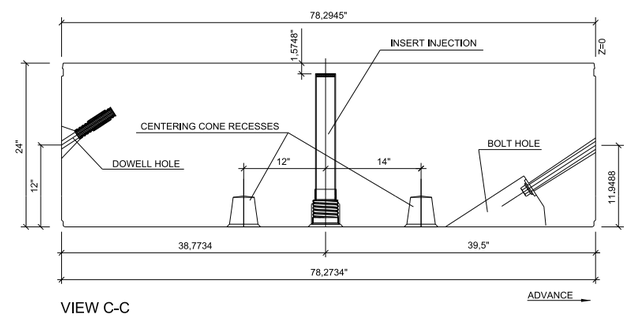

VIEW C-C
SCALE A-1= 1/10
A-3= 1/20

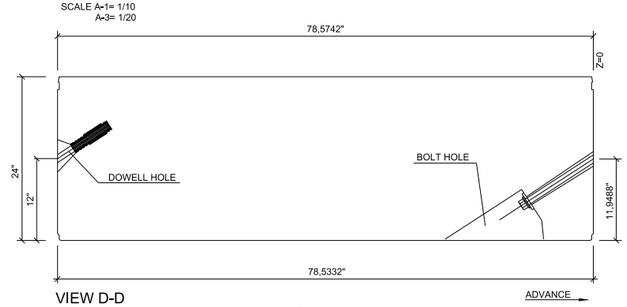

VIEW D-D
SCALE A-1= 1/10
A-3= 1/20

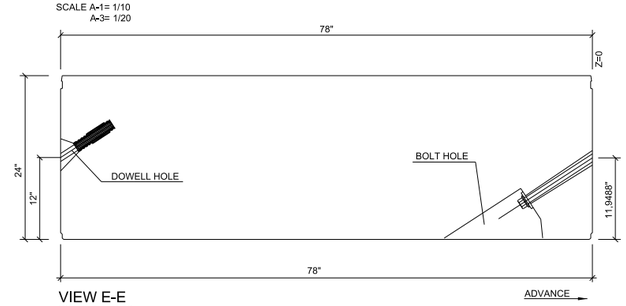

VIEW E-E
SCALE A-1= 1/10
A-3= 1/20

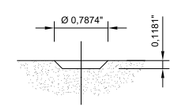

VIEW F-F
SCALE A-1= 1/1

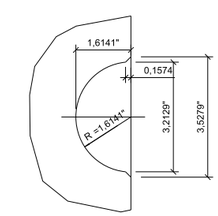

VIEW H-H
HOLLOW FOR HOUSING BAR GIVES GUIDED
SCALE A-1= 1/4
A-3= 1/8

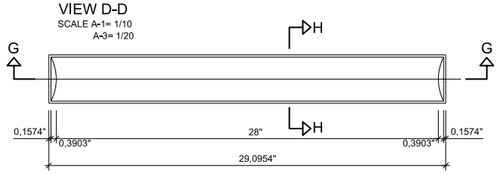

HOLLOW FOR HOUSING BAR GIVES GUIDED
SCALE A-1= 1/5
A-3= 1/10

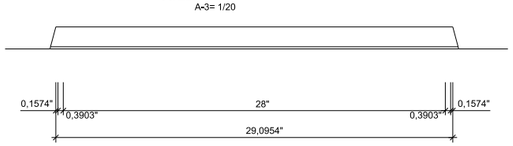

VIEW G-G
SCALE A-1= 1/5
A-3= 1/10

FILE NAME	IP_PWP:dms69908\46055-Txx-14TS018.DLV					
TIME	19-OCT-2010 15:47					
DATE	19-OCT-2010					
PLOTTED BY	groe					
DESIGNED BY	C. CALVO					
ENTERED BY	C. CALVO					
CHECKED BY	S. TREYGER					
PROJ. ENGR.	S. EVERETT					
REGIONAL ADM.	R. PAANANEN	REVISION	DATE	BY		

REGION NO.	STATE	FED.AID PROJ.NO.
10	WASH	
JOB NUMBER		
CONTRACT NO.		LOCATION NO.

SEMYON TREYGER · STATE OF WASHINGTON · 20868 · STRUCTURAL ENGINEER · PROFESSIONAL ENGINEER

RFP DESIGN
SUBMITTED BY
SEATTLE TUNNEL PARTNERS

NOT FOR CONSTRUCTION

Washington State Department of Transportation
U.S. Department of Transportation Federal Highway Administration
City of Seattle

ALASKAN WAY VIADUCT
REPLACEMENT PROJECT
SR 99 BORED TUNNEL
CONTRACT PACKAGE 14

VOUSSOIR OF MOULDS
VOUSSOIR – A.6

TS018

SHEET 93 OF 208 SHEETS

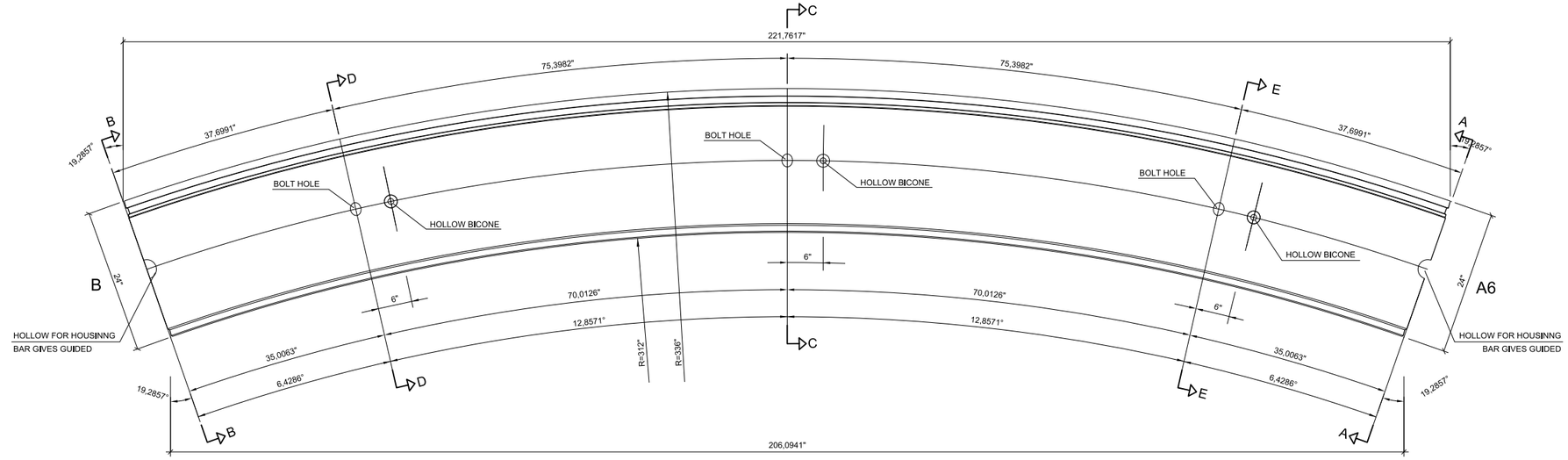

SEGMENT VIEW - A7
(FROM THE SHIELD) Z=0
SCALE A-1= 1/10
A-3= 1/20

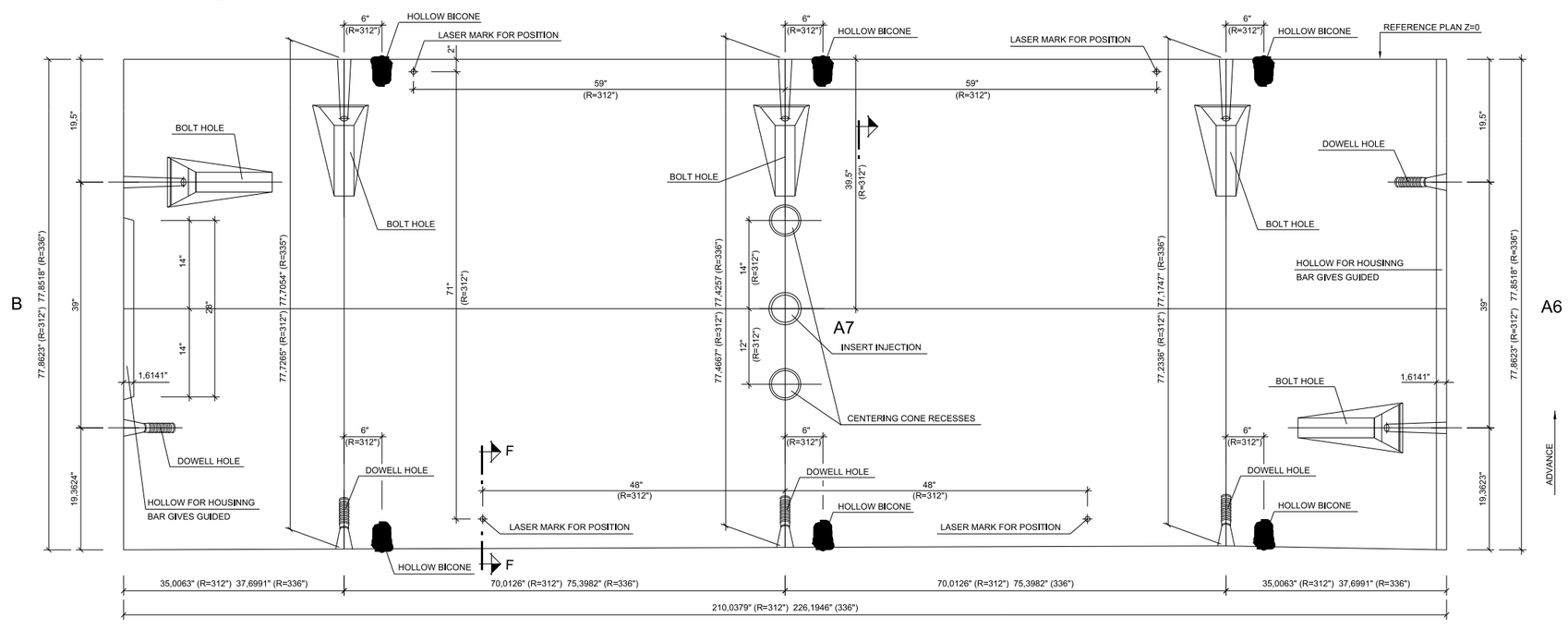

SEGMENT VIEW - A7
INNER FACE DEVELOPMENT
SCALE A-1= 1/10
A-3= 1/20

FILE NAME	IP_PWP:dms69908\46055-Txx-14TS019.DLV				REGION NO.	STATE	FED.AID PROJ.NO.
TIME	19-OCT-2010 15:47				10	WASH	
DATE	19-OCT-2010				JOB NUMBER		
PLOTTED BY	groe						
DESIGNED BY	C. CALVO				CONTRACT NO.		LOCATION NO.
ENTERED BY	C. CALVO						
CHECKED BY	S. TREYGER						
PROJ. ENGR.	S. EVERETT						
REGIONAL ADM.	R. PAANANEN	REVISION	DATE	BY			

SEMYON TREYGER STATE OF WASHINGTON 20868 STRUCTURAL ENGINEER PROFESSIONAL ENGINEER

RFP DESIGN
SUBMITTED BY
SEATTLE TUNNEL PARTNERS

NOT FOR CONSTRUCTION

Washington State Department of Transportation
U.S. Department of Transportation Federal Highway Administration
City of Seattle

ALASKAN WAY VIADUCT
REPLACEMENT PROJECT
SR 99 BORED TUNNEL
CONTRACT PACKAGE 14

VOUSSOIR OF MOULDS
VOUSSOIR – A.7

TS019

SHEET 94 OF 208 SHEETS

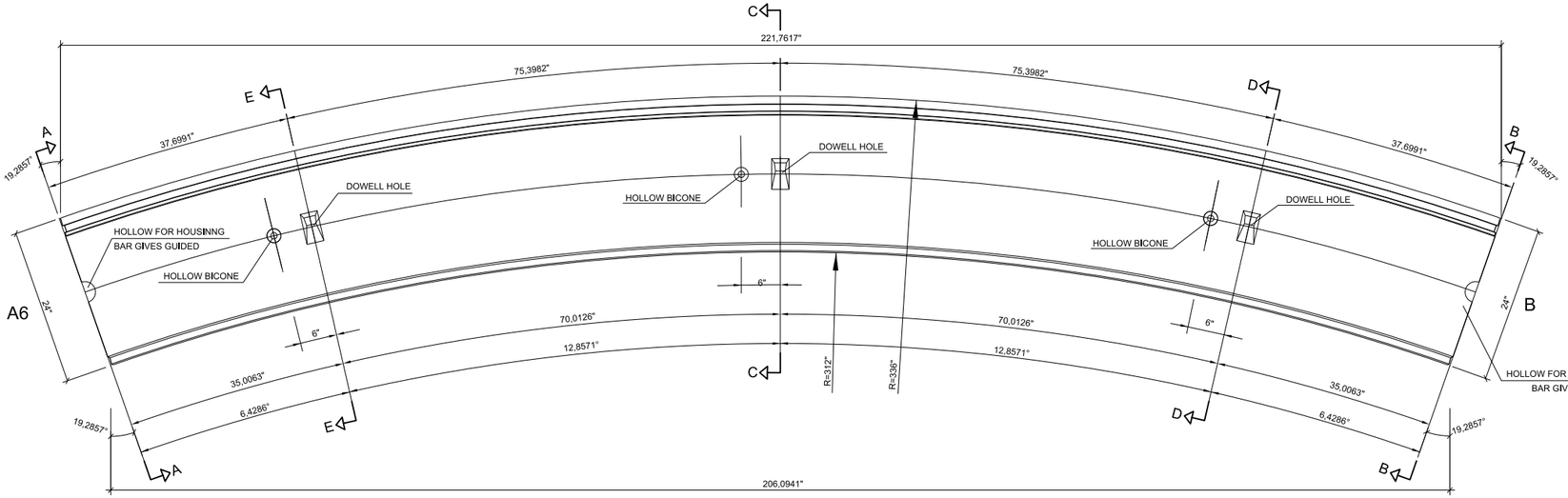

SEGMENT VIEW - A7
(TOWARDS ADVANCE)
SCALE A-1= 1/10
A-3= 1/20

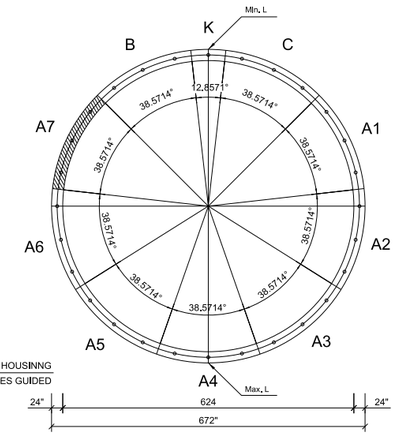

RING DEFINITION
S/E

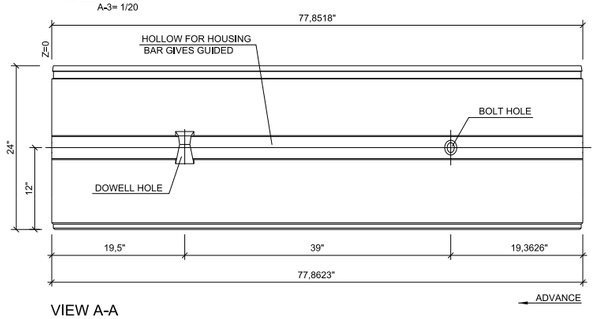

VIEW A-A
SCALE A-1= 1/10
A-3= 1/20

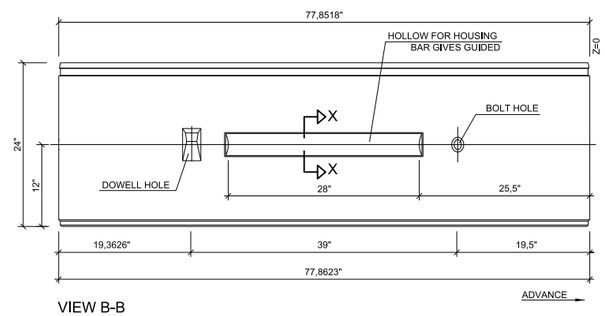

VIEW B-B
SCALE A-1= 1/10
A-3= 1/20

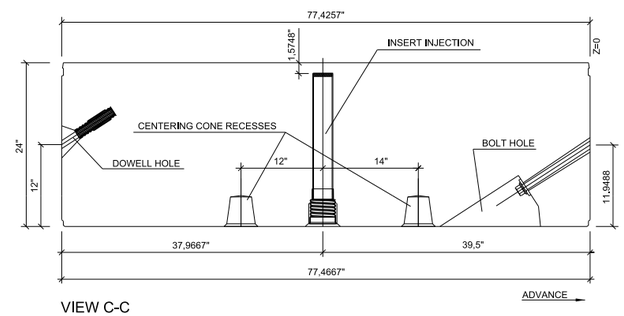

VIEW C-C
SCALE A-1= 1/10
A-3= 1/20

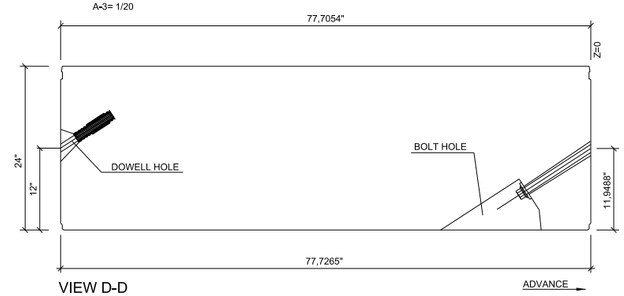

VIEW D-D
SCALE A-1= 1/10
A-3= 1/20

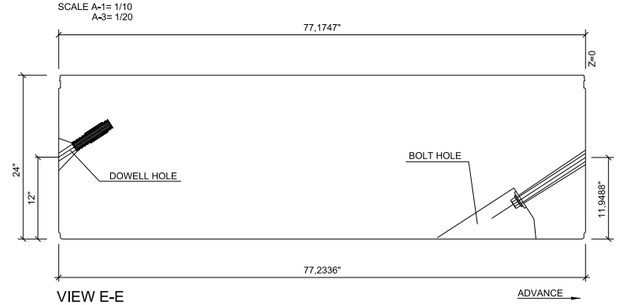

VIEW E-E
SCALE A-1= 1/10
A-3= 1/20

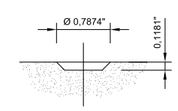

VIEW F-F
SCALE A-1= 1/1

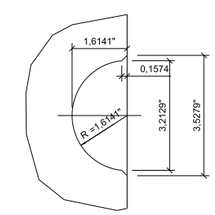

VIEW H-H
HOLLOW FOR HOUSING BAR GIVES GUIDED
SCALE A-1= 1/4
A-3= 1/8

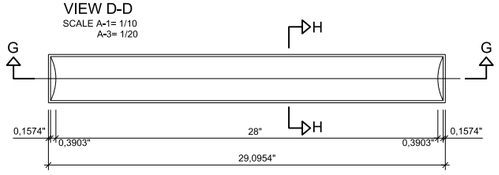

HOLLOW FOR HOUSING BAR GIVES GUIDED
SCALE A-1= 1/5
A-3= 1/10

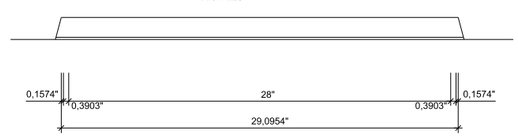

VIEW G-G
SCALE A-1= 1/5
A-3= 1/10

FILE NAME	IP_PWP:dms69908\46055-Txx-14TS020.DLV						
TIME	19-OCT-2010 15:47				REGION NO.	STATE	FED.AID PROJ.NO.
DATE	19-OCT-2010				10	WASH	
PLOTTED BY	groe				JOB NUMBER		
DESIGNED BY	C. CALVO						
ENTERED BY	C. CALVO						
CHECKED BY	S. TREYGER				CONTRACT NO.		LOCATION NO.
PROJ. ENGR.	S. EVERETT						
REGIONAL ADM.	R. PAANANEN	REVISION	DATE	BY			

RFP DESIGN
SUBMITTED BY
SEATTLE TUNNEL PARTNERS

NOT FOR CONSTRUCTION

Washington State Department of Transportation
U.S. Department of Transportation Federal Highway Administration
City of Seattle

ALASKAN WAY VIADUCT
REPLACEMENT PROJECT
SR 99 BORED TUNNEL
CONTRACT PACKAGE 14

VOUSSOIR OF MOULDS
VOUSSOIR – A.7

TS020

SHEET 95 OF 208 SHEETS

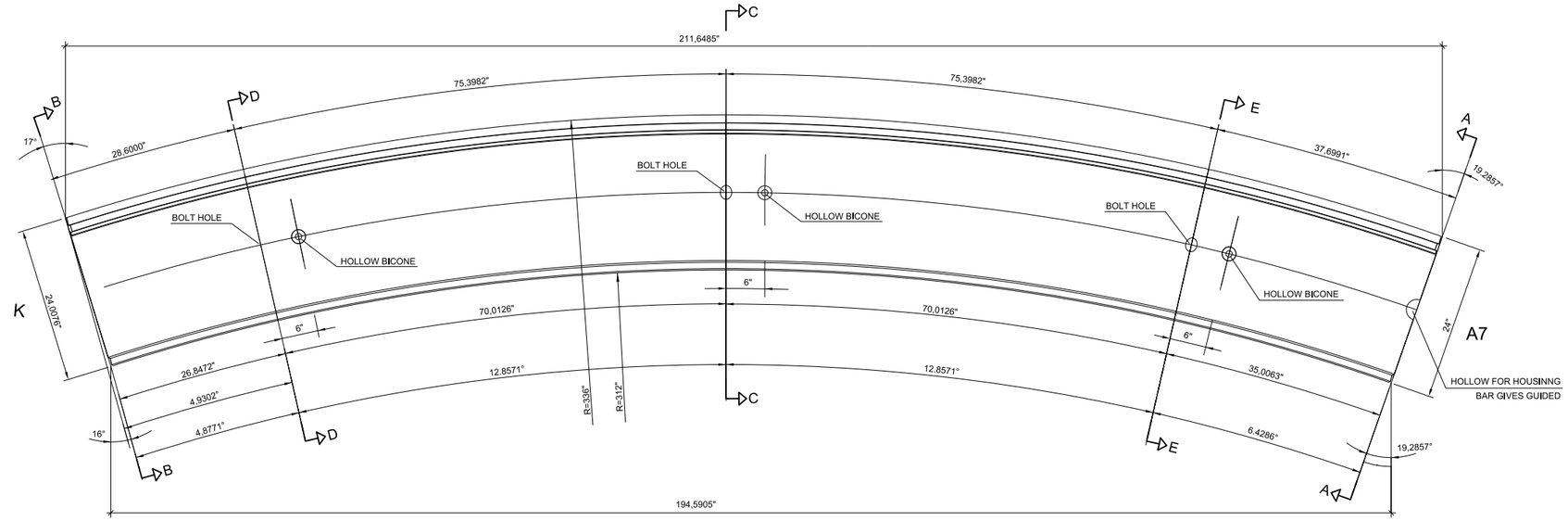

SEGMENT VIEW - B
(FROM THE SHIELD) Z=0

SCALE A-1= 1/10
A-3= 1/20

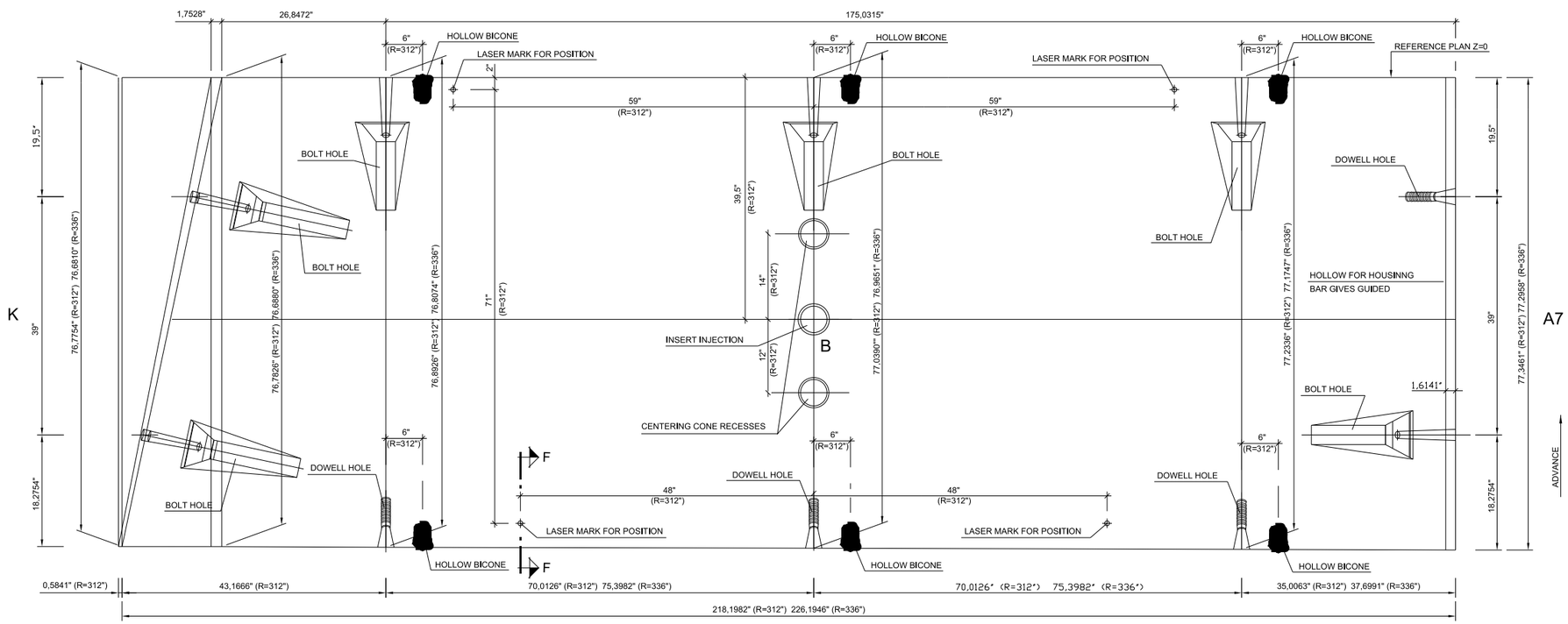

FILE NAME	IP_PWP:dms69908\46055-Txx-14TS021.DLV						
TIME	19-OCT-2010 15:48				REGION NO.	STATE	FED.AID PROJ.NO.
DATE	19-OCT-2010				10	WASH	
PLOTTED BY	groe				JOB NUMBER		
DESIGNED BY	C. CALVO						
ENTERED BY	C. CALVO				CONTRACT NO.		LOCATION NO.
CHECKED BY	S. TREYGER						
PROJ. ENGR.	S. EVERETT						
REGIONAL ADM.	R. PAANANEN	REVISION	DATE	BY			

RFP DESIGN
SUBMITTED BY
SEATTLE TUNNEL PARTNERS

NOT FOR CONSTRUCTION

Washington State Department of Transportation
U.S. Department of Transportation Federal Highway Administration
City of Seattle

ALASKAN WAY VIADUCT REPLACEMENT PROJECT
SR 99 BORED TUNNEL
CONTRACT PACKAGE 14

VOUSSOIR OF MOULDS
VOUSSOIR – B

TS021

SHEET 96 OF 208 SHEETS

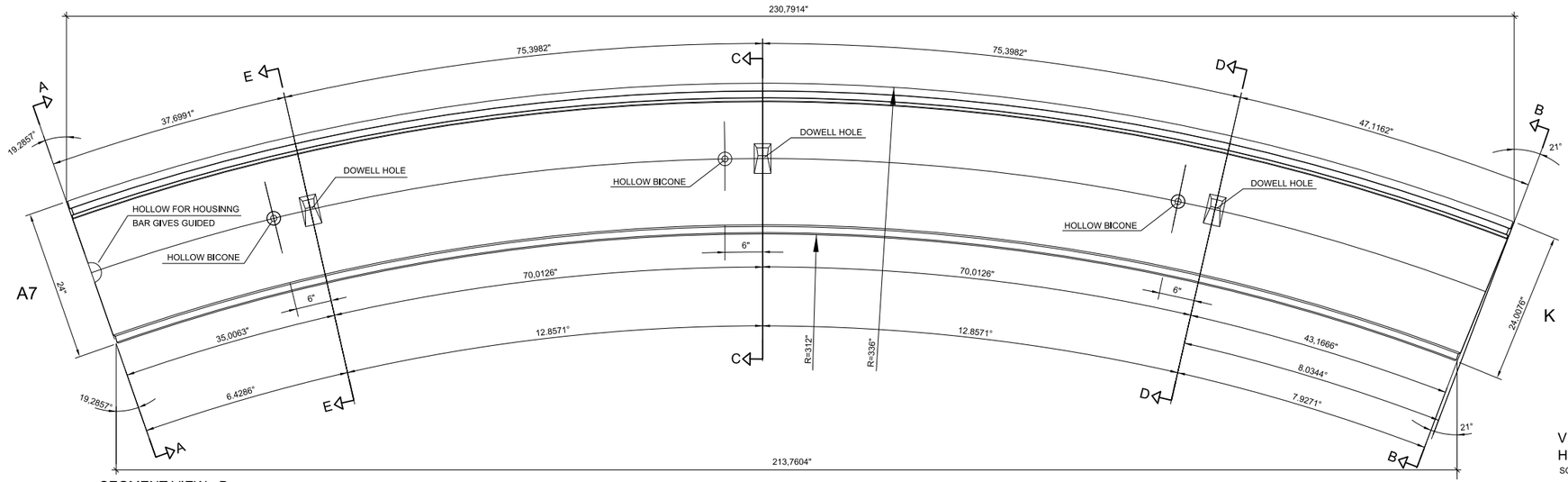

SEGMENT VIEW - B
(TOWARDS ADVANCE)
SCALE A-1= 1/10
A-3= 1/20

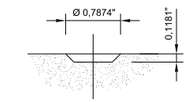

VIEW F-F
SCALE A-1= 1/1

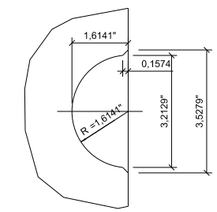

VIEW H-H
HOLLOW FOR HOUSING BAR GIVES GUIDED
SCALE A-1= 1/4
A-3= 1/8

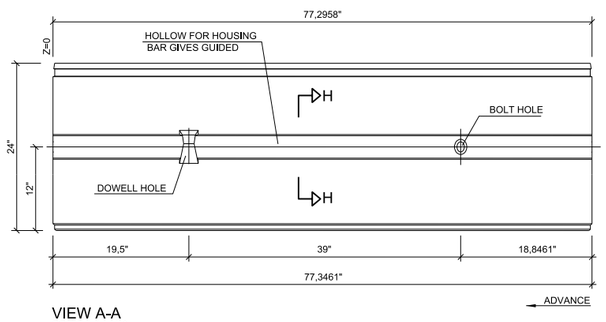

VIEW A-A
SCALE A-1= 1/10
A-3= 1/20

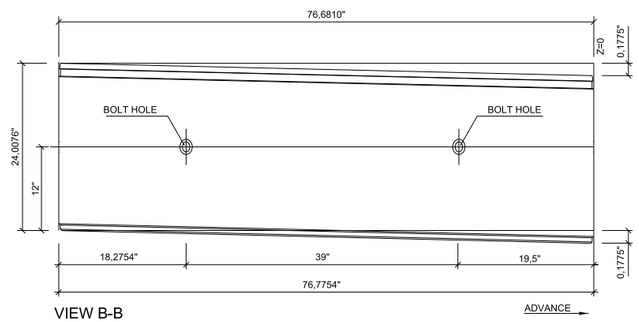

VIEW B-B
SCALE A-1= 1/10
A-3= 1/20

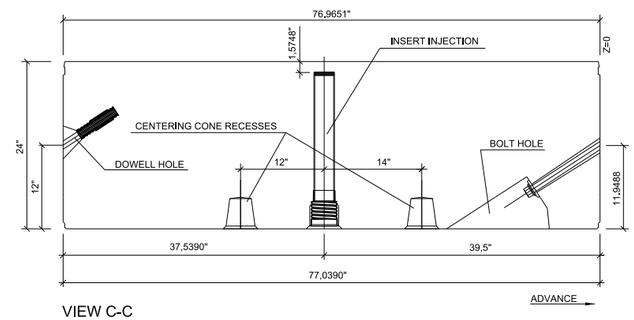

VIEW C-C
SCALE A-1= 1/10
A-3= 1/20

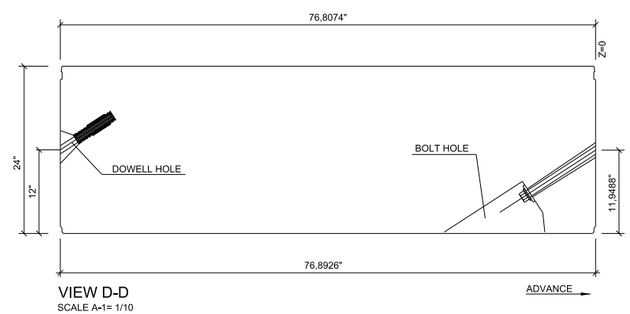

VIEW D-D
SCALE A-1= 1/10
A-3= 1/20

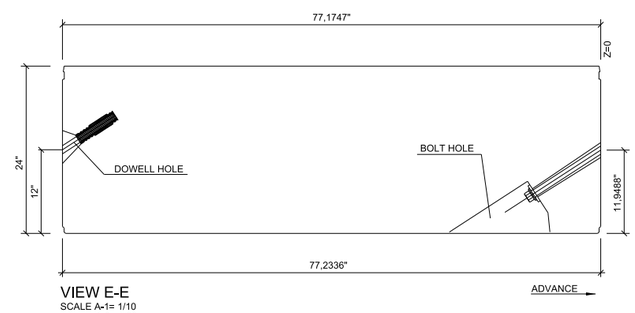

VIEW E-E
SCALE A-1= 1/10
A-3= 1/20

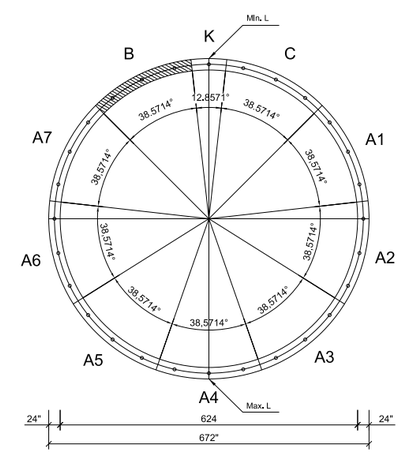

RING DEFINITION
S/E

FILE NAME	IP_PWP:dms69908\46055-Txx-14TS022.DLV				REGION NO.	STATE	FED.AID PROJ.NO.
TIME	19-OCT-2010 15:48				10	WASH	
DATE	19-OCT-2010				JOB NUMBER		
PLOTTED BY	groe						
DESIGNED BY	C. CALVO						
ENTERED BY	C. CALVO						
CHECKED BY	S. TREYGER				CONTRACT NO.		LOCATION NO.
PROJ. ENGR.	S. EVERETT						
REGIONAL ADM.	R. PAANANEN	REVISION	DATE	BY			

SEMYON TREYGER
STATE OF WASHINGTON
20868
STRUCTURAL ENGINEER
PROFESSIONAL ENGINEER

RFP DESIGN
SUBMITTED BY
SEATTLE TUNNEL PARTNERS

NOT FOR CONSTRUCTION

Washington State Department of Transportation
U.S. Department of Transportation Federal Highway Administration
City of Seattle

ALASKAN WAY VIADUCT
REPLACEMENT PROJECT
SR 99 BORED TUNNEL
CONTRACT PACKAGE 14

VOUSSOIR OF MOULDS
VOUSSOIR – B

TS022

SHEET 97 OF 208 SHEETS

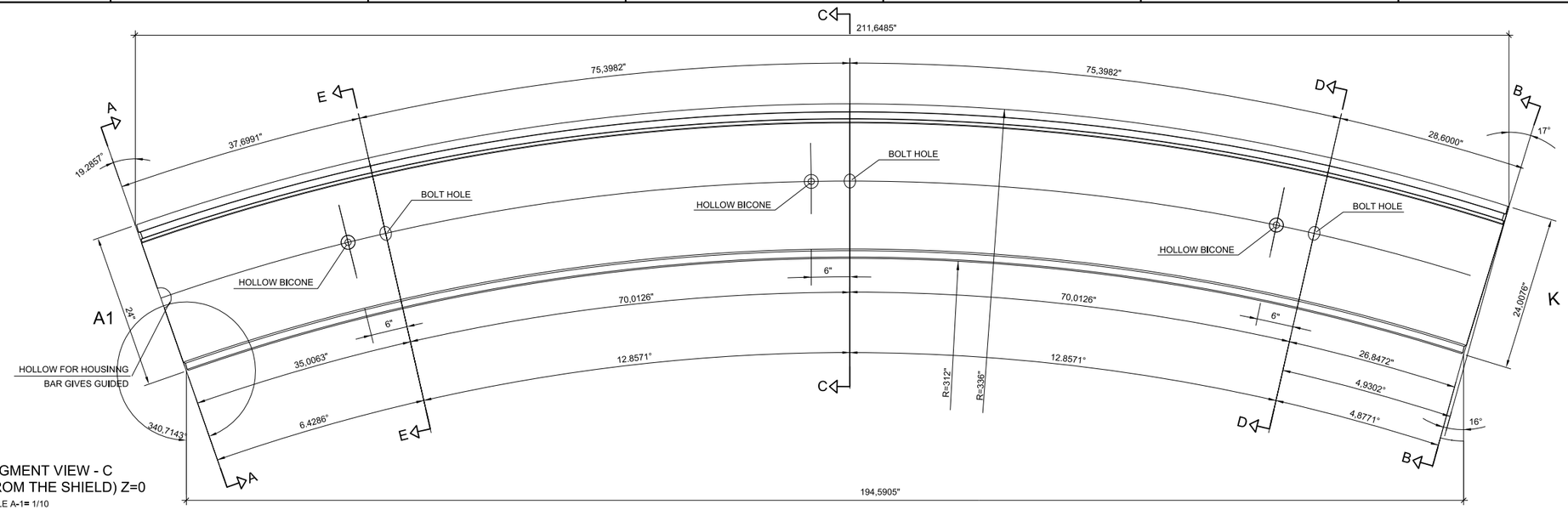

SEGMENT VIEW - C
(FROM THE SHIELD) Z=0
SCALE A-1= 1/10
A-3= 1/20

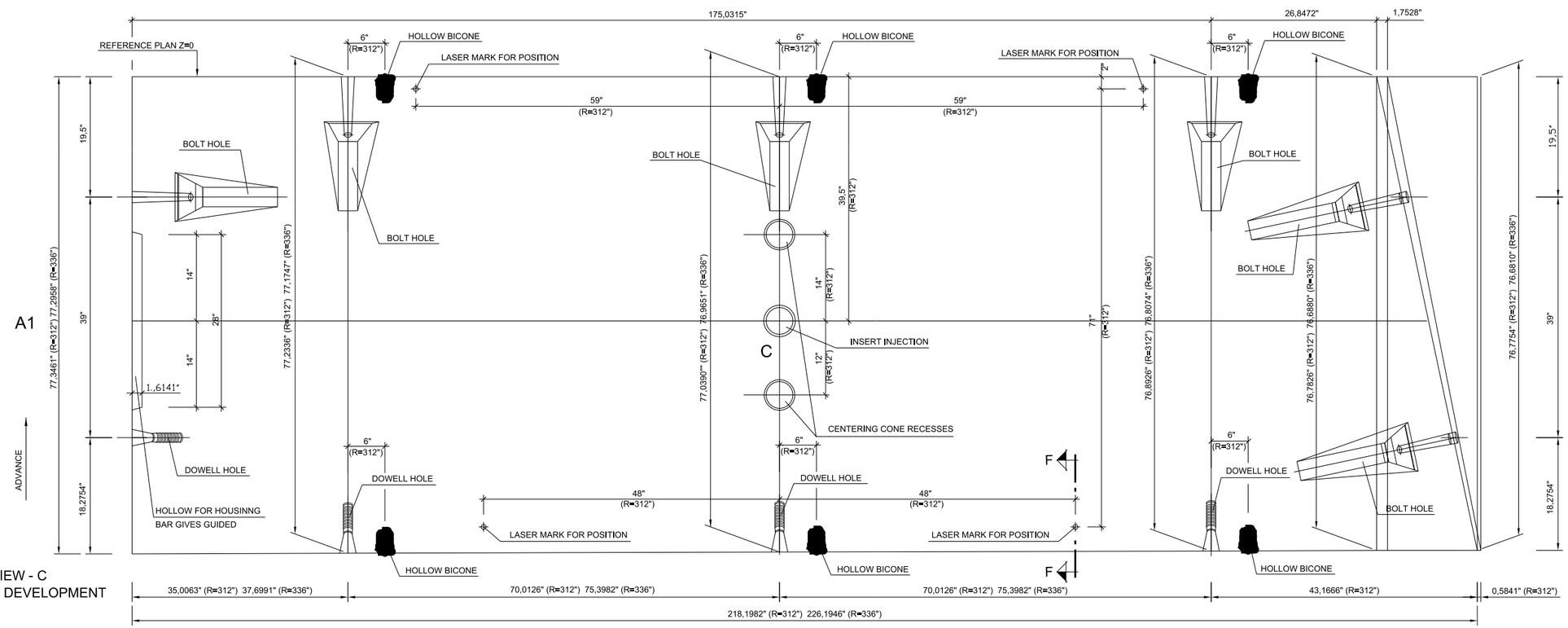

SEGMENT VIEW - C
INNER FACE DEVELOPMENT
SCALE A-1= 1/10
A-3= 1/20

FILE NAME	IP_PWP:dms69908\46055-Txx-14TS023.DLV				REGION NO.	STATE	FED.AID PROJ.NO.
TIME	19-OCT-2010 15:48				10	WASH	
DATE	19-OCT-2010				JOB NUMBER		
PLOTTED BY	groe						
DESIGNED BY	C. CALVO				CONTRACT NO.		LOCATION NO.
ENTERED BY	C. CALVO						
CHECKED BY	S. TREYGER						
PROJ. ENGR.	S. EVERETT						
REGIONAL ADM.	R. PAANANEN	REVISION	DATE	BY			

SEMYON TREYGER — STATE OF WASHINGTON — 20868 — STRUCTURAL ENGINEER — PROFESSIONAL ENGINEER

RFP DESIGN
SUBMITTED BY
SEATTLE TUNNEL PARTNERS

NOT FOR CONSTRUCTION

Washington State Department of Transportation
U.S. Department of Transportation Federal Highway Administration
City of Seattle

ALASKAN WAY VIADUCT
REPLACEMENT PROJECT
SR 99 BORED TUNNEL
CONTRACT PACKAGE 14

VOUSSOIR OF MOULDS
VOUSSOIR – C

TS023

SHEET 98 OF 208 SHEETS

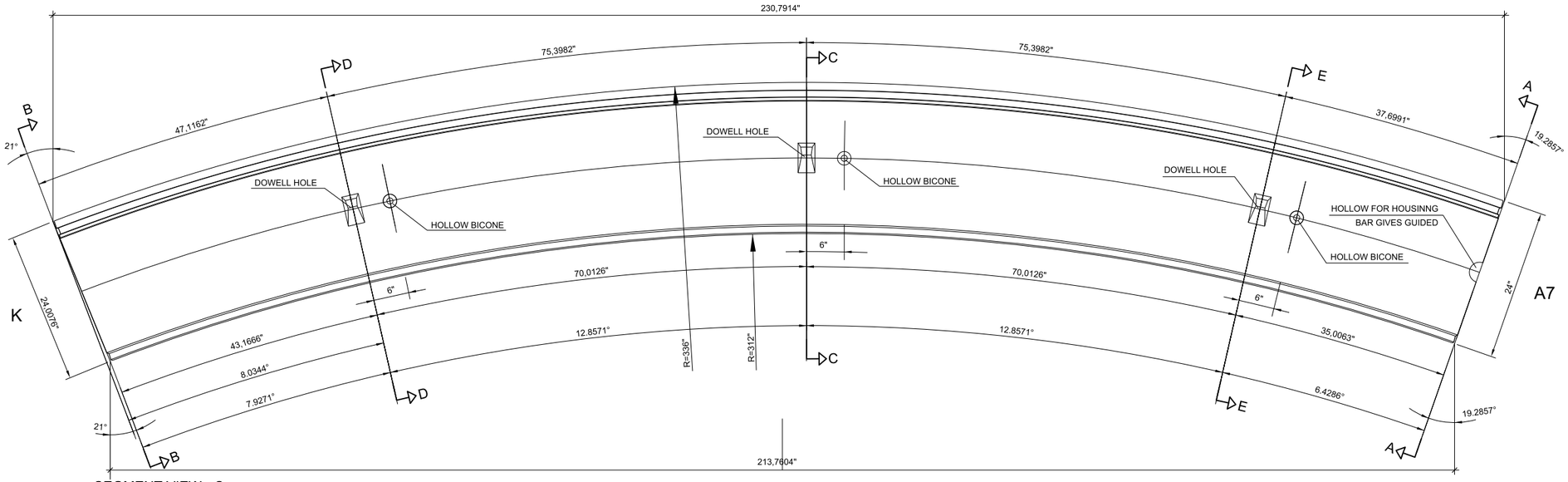

SEGMENT VIEW - C
(TOWARDS ADVANCE)
SCALE A-1= 1/10
A-3= 1/20

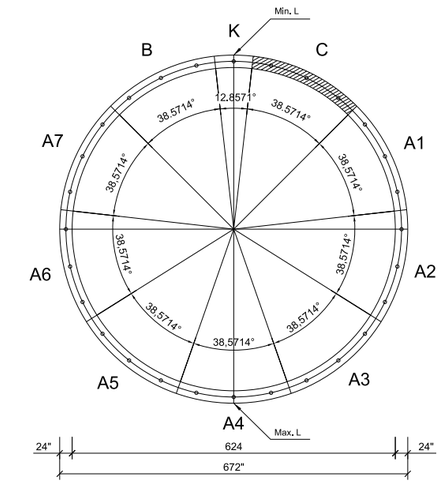

RING DEFINITION
S/E

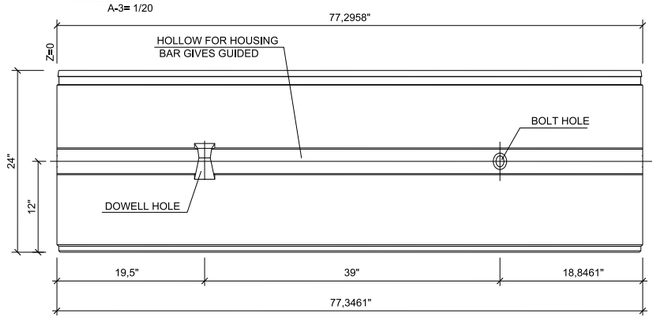

VIEW A-A
SCALE A-1= 1/10
A-3= 1/20

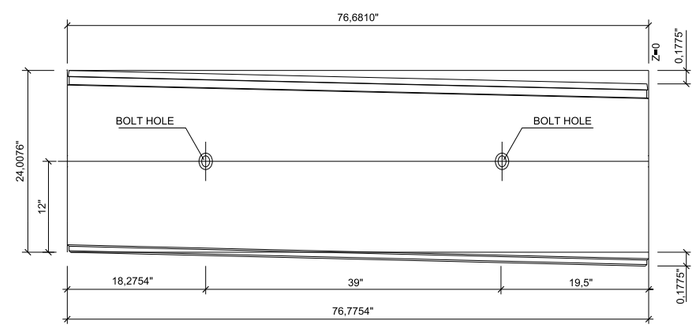

VIEW B-B
SCALE A-1= 1/10
A-3= 1/20

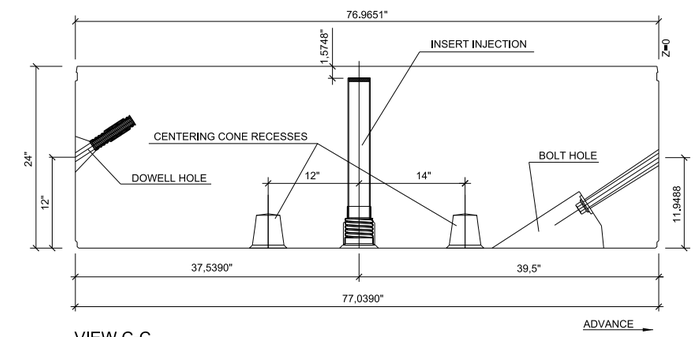

VIEW C-C
SCALE A-1= 1/10
A-3= 1/20

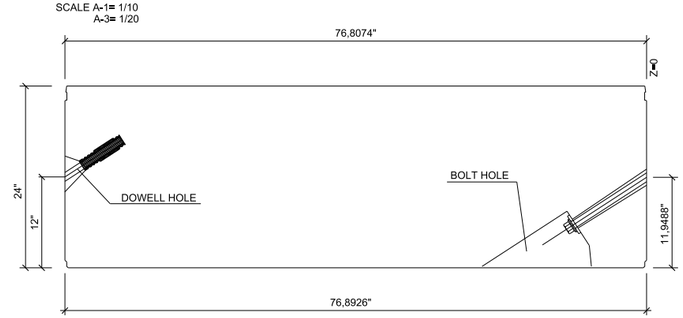

VIEW D-D
SCALE A-1= 1/10
A-3= 1/20

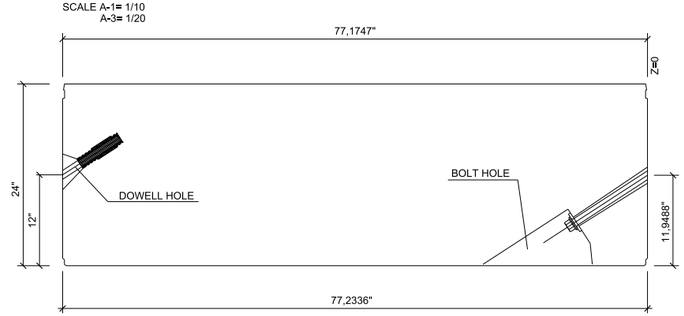

VIEW E-E
SCALE A-1= 1/10
A-3= 1/20

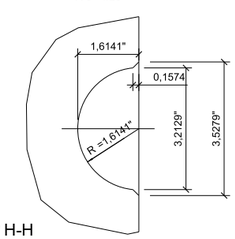

VIEW H-H
HOLLOW FOR HOUSING
BAR GIVES GUIDED
SCALE A-1= 1/4
A-3= 1/8

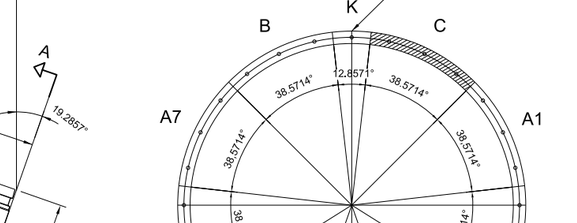

HOLLOW FOR HOUSING BAR GIVES GUIDED
SCALE A-1= 1/5
A-3= 1/10

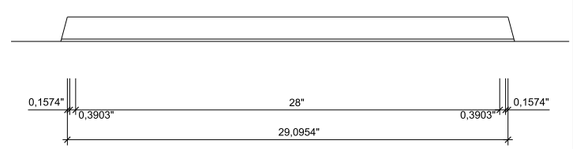

VIEW G-G
SCALE A-1= 1/5
A-3= 1/10

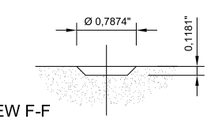

VIEW F-F
SCALE A-1= 1/1

FILE NAME	IP_PWP:dms69908\46055-Txx-14TS024.DLV					
TIME	19-OCT-2010 15:48					
DATE	19-OCT-2010					
PLOTTED BY	groe					
DESIGNED BY	C. CALVO					
ENTERED BY	C. CALVO					
CHECKED BY	S. TREYGER					
PROJ. ENGR.	S. EVERETT					
REGIONAL ADM.	R. PAANANEN	REVISION	DATE	BY		

REGION NO.	STATE	FED.AID PROJ.NO.
10	WASH	
JOB NUMBER		
CONTRACT NO.		LOCATION NO.

SEAMON TREYGER · STATE OF WASHINGTON · 20868 · STRUCTURAL ENGINEER · PROFESSIONAL ENGINEER

RFP DESIGN
SUBMITTED BY
SEATTLE TUNNEL PARTNERS

NOT FOR CONSTRUCTION

Washington State Department of Transportation
U.S. Department of Transportation Federal Highway Administration
City of Seattle

ALASKAN WAY VIADUCT
REPLACEMENT PROJECT
SR 99 BORED TUNNEL
CONTRACT PACKAGE 14

VOUSSOIR OF MOULDS
VOUSSOIR – C

TS024

SHEET 99 OF 208 SHEETS

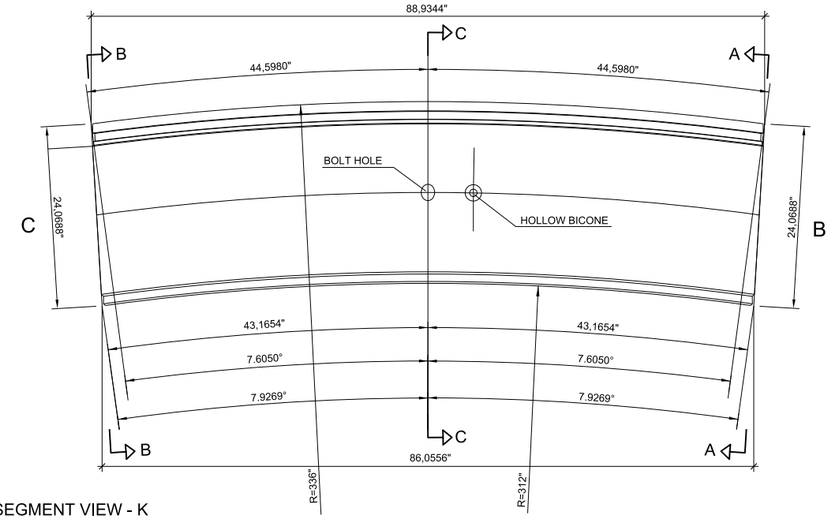

SEGMENT VIEW - K
(FROM THE SHIELD) Z=0
SCALE A-1= 1/10
A-3= 1/20

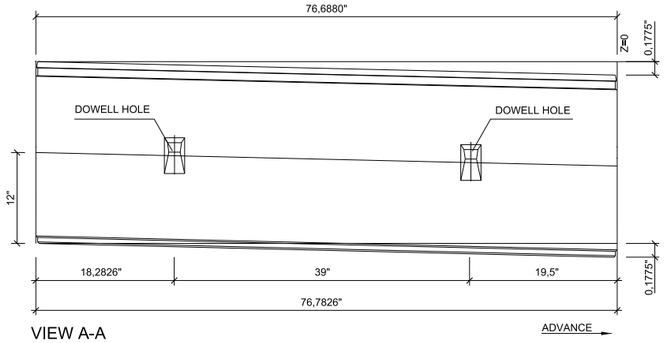

VIEW A-A
SCALE A-1= 1/10
A-3= 1/20

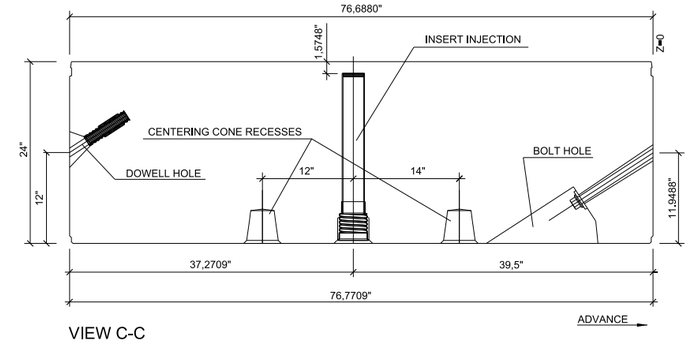

VIEW C-C
SCALE A-1= 1/10
A-3= 1/20

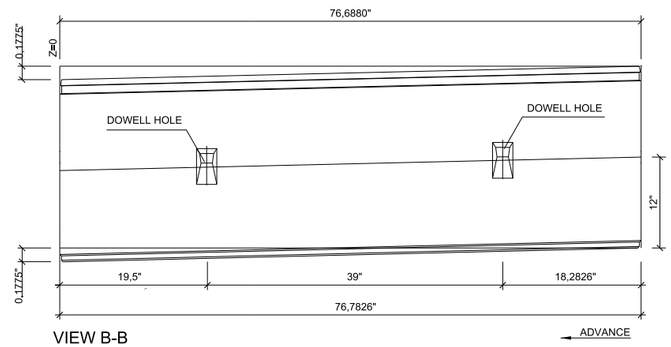

VIEW B-B
SCALE A-1= 1/10
A-3= 1/20

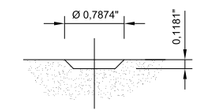

VIEW F-F
SCALE A-1= 1/1

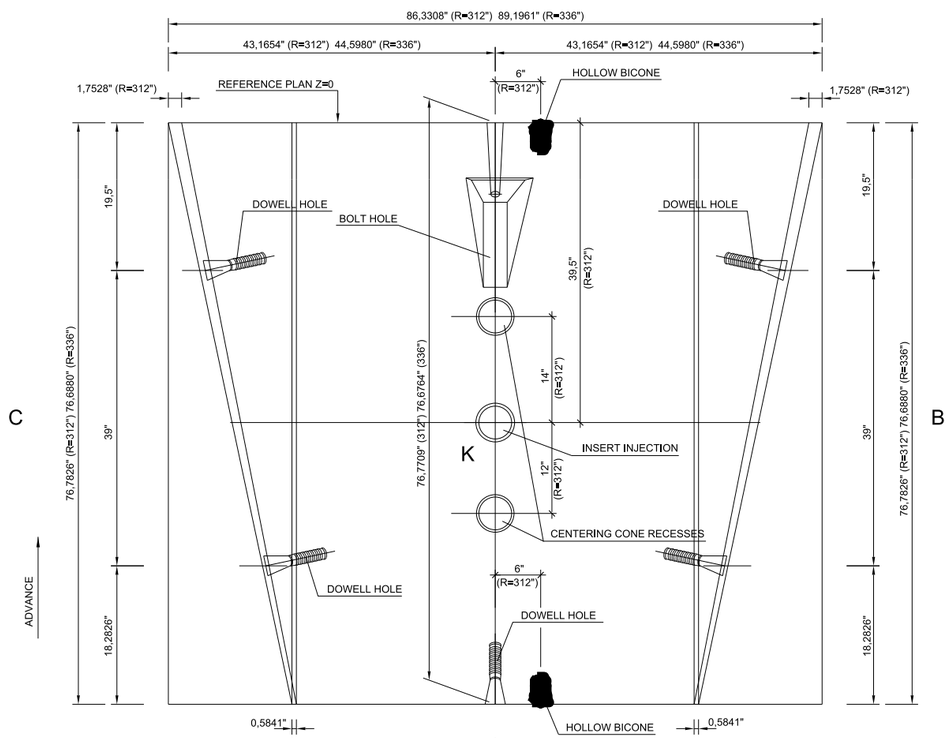

SEGMENT VIEW - K
INNER FACE DEVELOPMENT
SCALE A-1= 1/10
A-3= 1/20

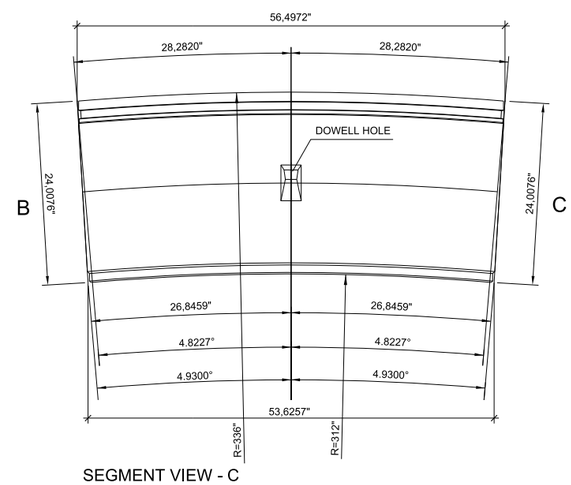

SEGMENT VIEW - C
(TOWARDS ADVANCE)
SCALE A-1= 1/10
A-3= 1/20

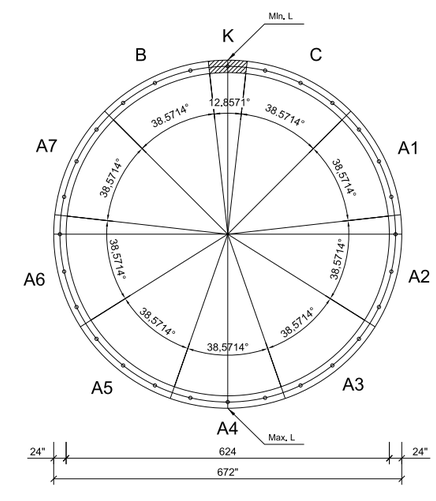

RING DEFINITION
S/E

FILE NAME	IP_PWP:dms69908\46055-Txx-14TS025.DLV				REGION NO.	STATE	FED.AID PROJ.NO.
TIME	19-OCT-2010 15:49				10	WASH	
DATE	19-OCT-2010				JOB NUMBER		
PLOTTED BY	groe						
DESIGNED BY	C. CALVO				CONTRACT NO.		LOCATION NO.
ENTERED BY	C. CALVO						
CHECKED BY	S. TREYGER						
PROJ. ENGR.	S. EVERETT						
REGIONAL ADM.	R. PAANANEN	REVISION	DATE	BY			

SEMYON TREYGER · STATE OF WASHINGTON · 20868 · STRUCTURAL ENGINEER · PROFESSIONAL ENGINEER

RFP DESIGN
SUBMITTED BY
SEATTLE TUNNEL PARTNERS

NOT FOR CONSTRUCTION

Washington State Department of Transportation
U.S. Department of Transportation Federal Highway Administration
City of Seattle

ALASKAN WAY VIADUCT
REPLACEMENT PROJECT
SR 99 BORED TUNNEL
CONTRACT PACKAGE 14

VOUSSOIR OF MOULDS
VOUSSOIR – K

TS025

SHEET 100 OF 208 SHEETS

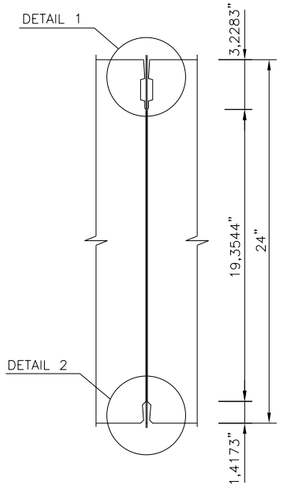

CIRCUMFERENTIAL JOINT
SECTION 1-1
SCALE 1:5

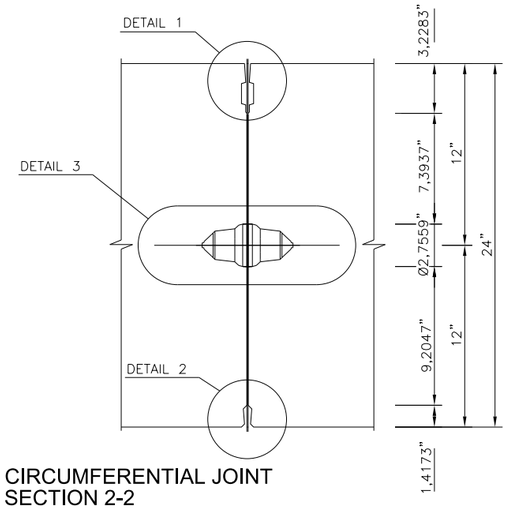

CIRCUMFERENTIAL JOINT
SECTION 2-2
SCALE 1:5

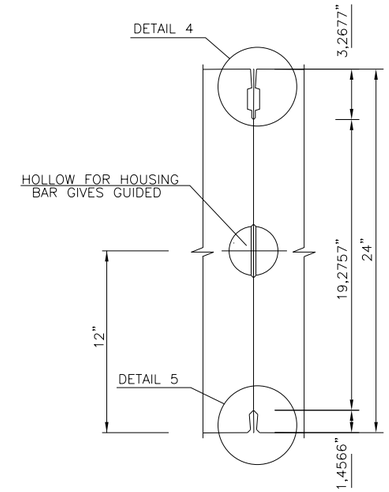

LONGITUDINAL JOINT (RADIAL)
SECTION 3-3
SCALE 1:5

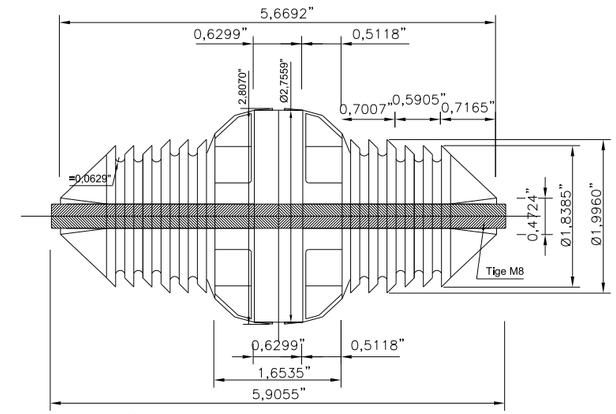

CENTERING CONE
SCALE 1:1

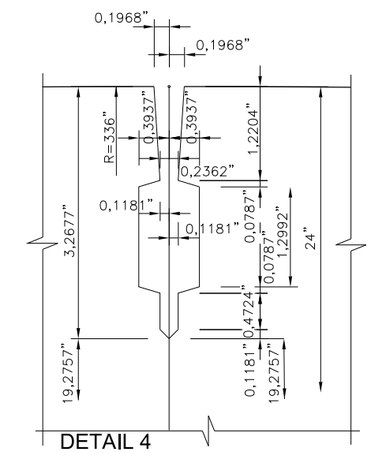

DETAIL 4
SCALE 1:1

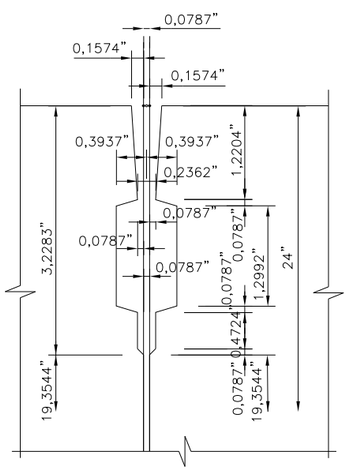

DETAIL 1
SCALE 1:1

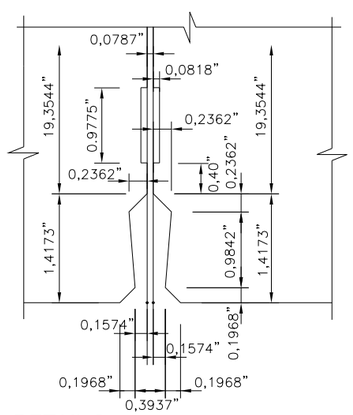

DETAIL 2
SCALE 1:1

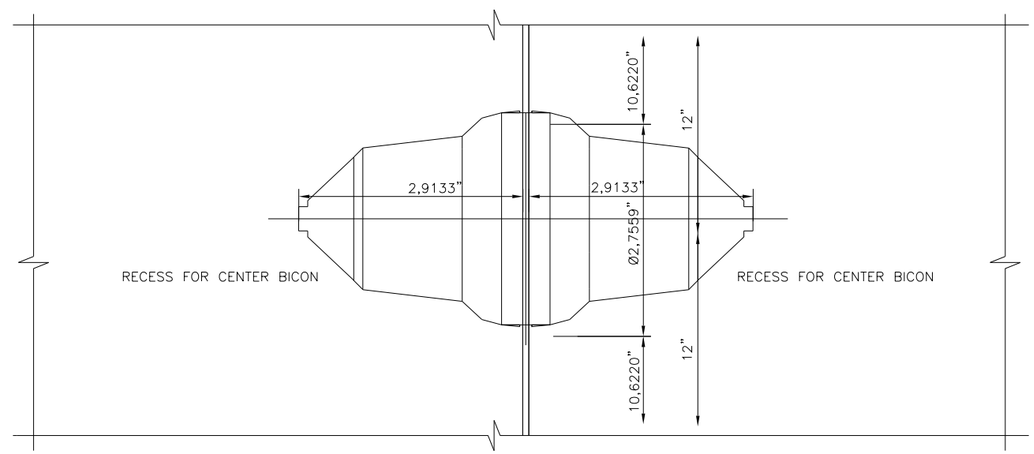

DETAIL 3
SCALE 1:1

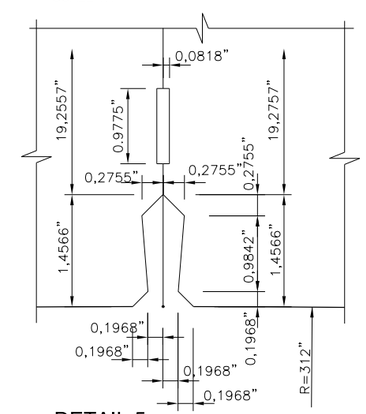

DETAIL 5
SCALE 1:1

FILE NAME	IP_PWP:dms69908\46055-Txx-14TS026.DLV				REGION NO.	STATE	FED.AID PROJ.NO.
TIME	19-OCT-2010 15:49				10	WASH	
DATE	19-OCT-2010				JOB NUMBER		
PLOTTED BY	groe						
DESIGNED BY	C. CALVO				CONTRACT NO.		LOCATION NO.
ENTERED BY	C. CALVO						
CHECKED BY	S. TREYGER						
PROJ. ENGR.	S. EVERETT						
REGIONAL ADM.	R. PAANANEN	REVISION	DATE	BY			

SEMYON TREYGER — STATE OF WASHINGTON — 20868 — STRUCTURAL ENGINEER — PROFESSIONAL ENGINEER

RFP DESIGN
SUBMITTED BY
SEATTLE TUNNEL PARTNERS

NOT FOR CONSTRUCTION

Washington State Department of Transportation
U.S. Department of Transportation Federal Highway Administration
City of Seattle

ALASKAN WAY VIADUCT
REPLACEMENT PROJECT
SR 99 BORED TUNNEL
CONTRACT PACKAGE 14

CIRCUMERENTIAL, LONGITUDINAL JOINT (RADIAL)
SECTIONS AND DETAILS

TS026

SHEET 101 OF 208 SHEETS

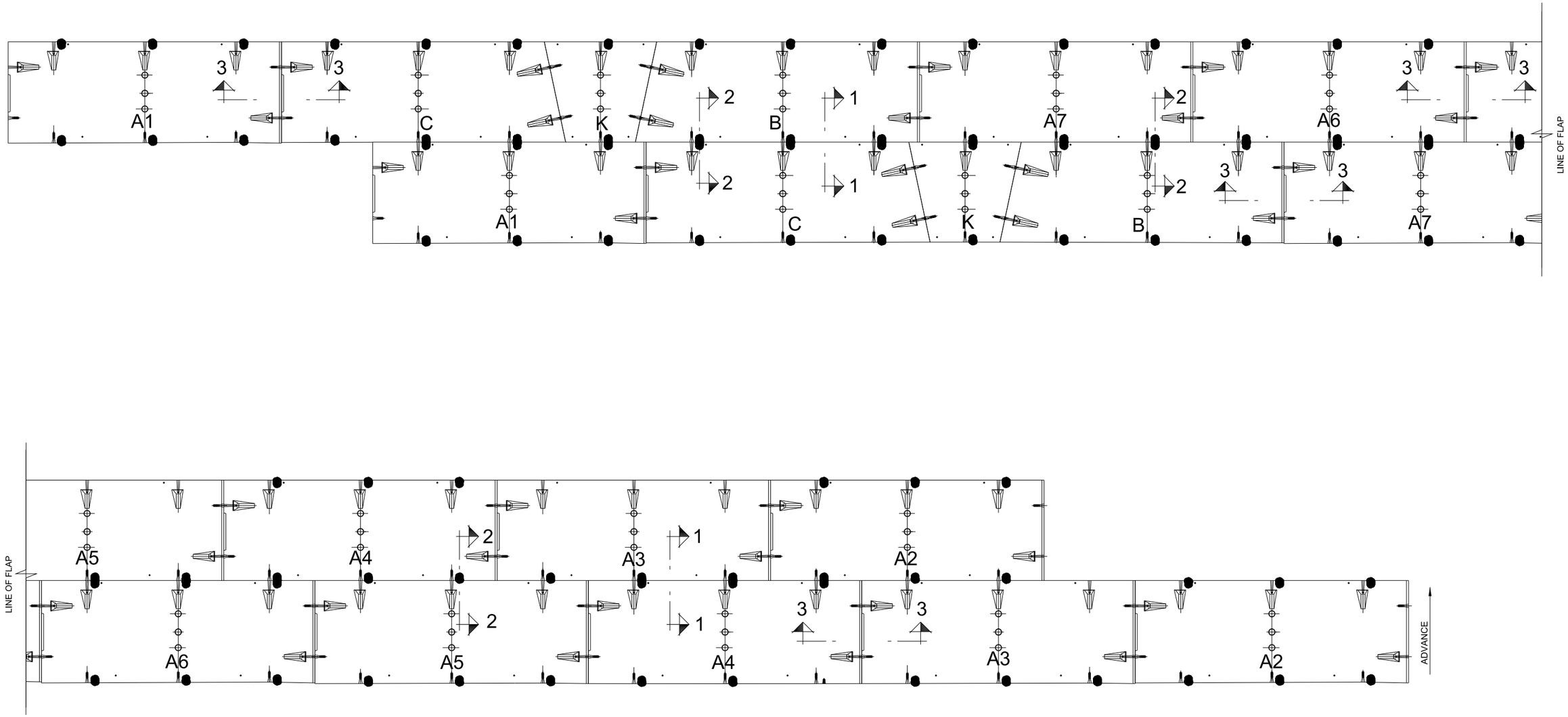

GENERAL VIEW (INNER FACE DEVELOPMENT
SCALE 1: 40

FILE NAME	IP_PWP:dms69908\46055-Txx-14TS027.DLV						
TIME	19-OCT-2010 15:49				REGION NO.	STATE	FED.AID PROJ.NO.
DATE	19-OCT-2010				10	WASH	
PLOTTED BY	groe				JOB NUMBER		
DESIGNED BY	C. CALVO						
ENTERED BY	C. CALVO						
CHECKED BY	S. TREYGER				CONTRACT NO.		LOCATION NO.
PROJ. ENGR.	S. EVERETT						
REGIONAL ADM.	R. PAANANEN	REVISION	DATE	BY			

RFP DESIGN
SUBMITTED BY
SEATTLE TUNNEL PARTNERS

NOT FOR CONSTRUCTION

Washington State Department of Transportation
U.S. Department of Transportation Federal Highway Administration
City of Seattle

ALASKAN WAY VIADUCT
REPLACEMENT PROJECT
SR 99 BORED TUNNEL
CONTRACT PACKAGE 14

GENERAL VIEW
(INNER FACE DEVELOPMENT)

TS027

SHEET 102 OF 208 SHEETS

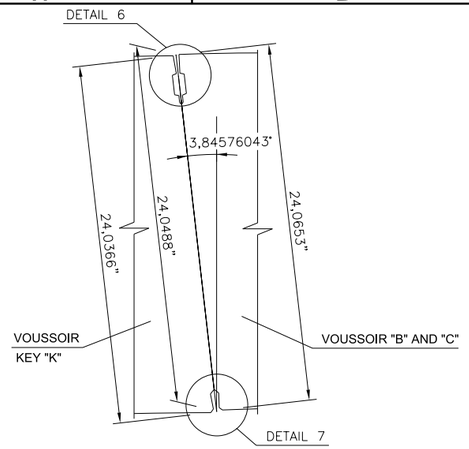

LONGITUDINAL GASKET VOUSSOIR KEY
SECTION 4-4
SCALE 1:5

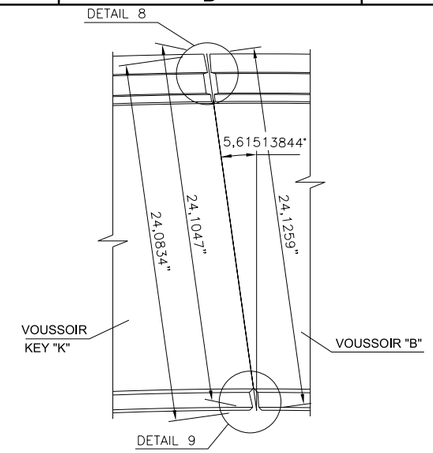

LONGITUDINAL GASKET VOUSSOIR KEY
SECTION 5-5
SCALE 1:5

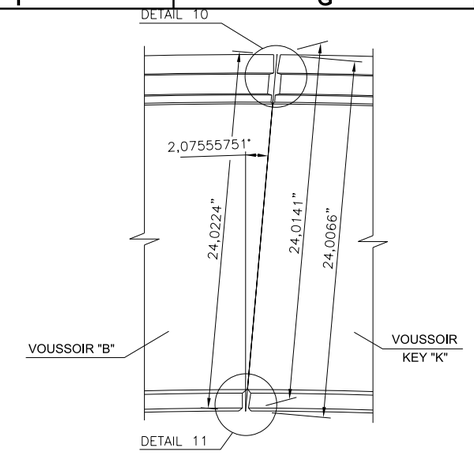

LONGITUDINAL GASKET VOUSSOIR KEY
SECTION 6-6
SCALE 1:5

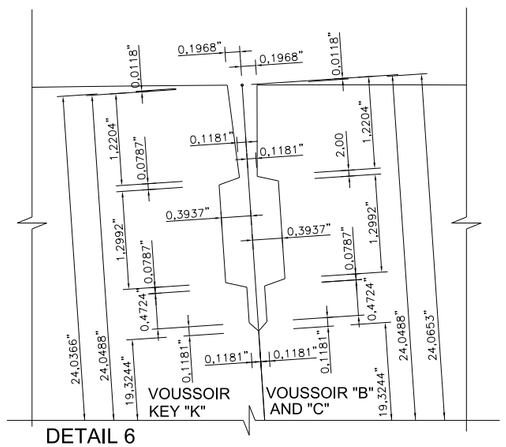

DETAIL 6
ESCALA 1:1

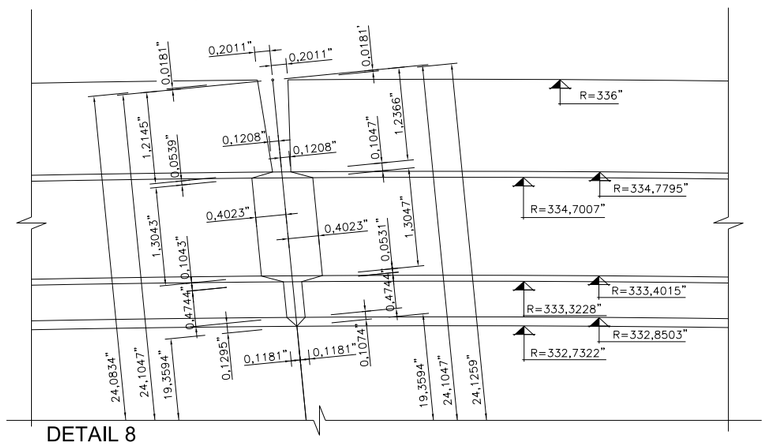

DETAIL 8
ESCALA 1:1

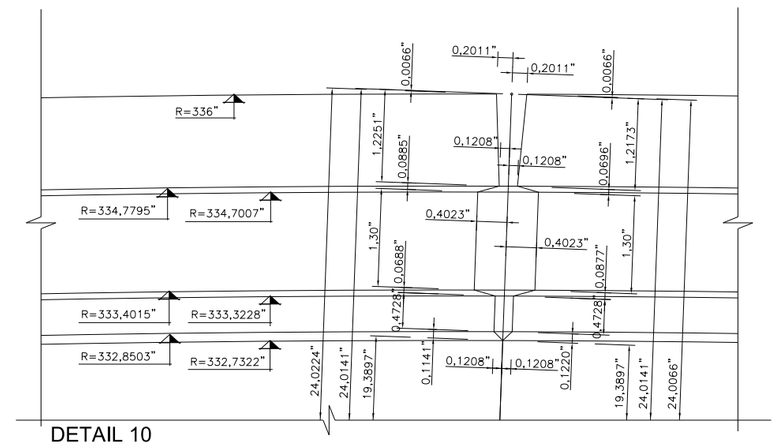

DETAIL 10
ESCALA 1:1

DETAIL 7
ESCALA 1:1

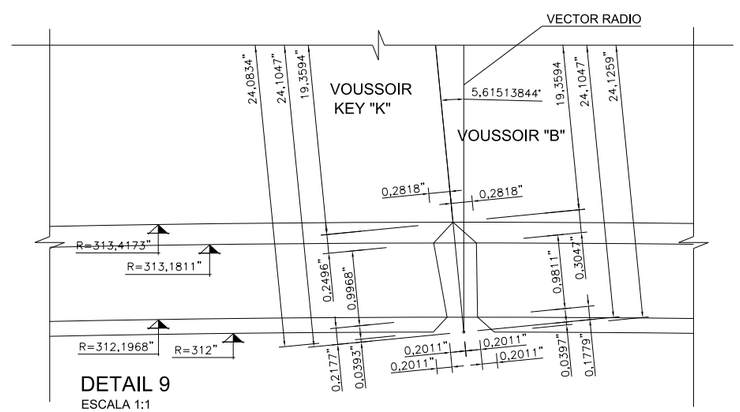

DETAIL 9
ESCALA 1:1

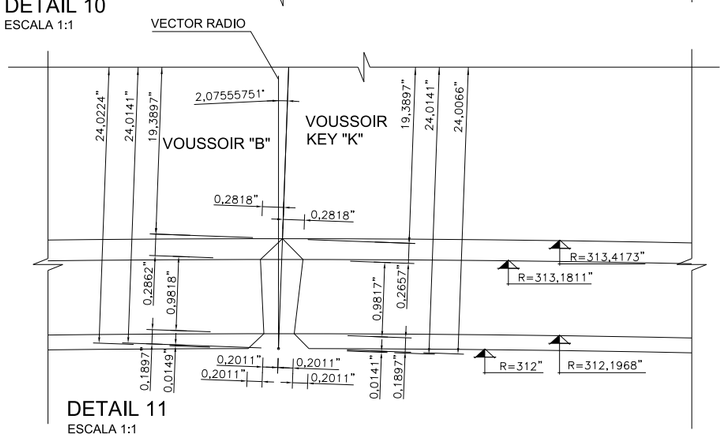

DETAIL 11
ESCALA 1:1

FILE NAME	IP_PWP:dms69908\46055-Txx-14TS028.DLV
TIME	19-OCT-2010 15:50
DATE	19-OCT-2010
PLOTTED BY	groe
DESIGNED BY	C. CALVO
ENTERED BY	C. CALVO
CHECKED BY	S. TREYGER
PROJ. ENGR.	S. EVERETT
REGIONAL ADM.	R. PAANANEN

REVISION	DATE	BY

REGION NO.	STATE	FED.AID PROJ.NO.
10	WASH	
JOB NUMBER		
CONTRACT NO.		LOCATION NO.

SEMYON TREYGER — STATE OF WASHINGTON — 20868 — REGISTERED PROFESSIONAL ENGINEER

RFP DESIGN
SUBMITTED BY
SEATTLE TUNNEL PARTNERS

NOT FOR CONSTRUCTION

Washington State Department of Transportation
U.S. Department of Transportation Federal Highway Administration
City of Seattle

ALASKAN WAY VIADUCT
REPLACEMENT PROJECT
SR 99 BORED TUNNEL
CONTRACT PACKAGE 14

LONGITUDINAL GASKET VOUSSOIR KEY
SECTIONS AND DETAILS

TS028

SHEET 103 OF 208 SHEETS

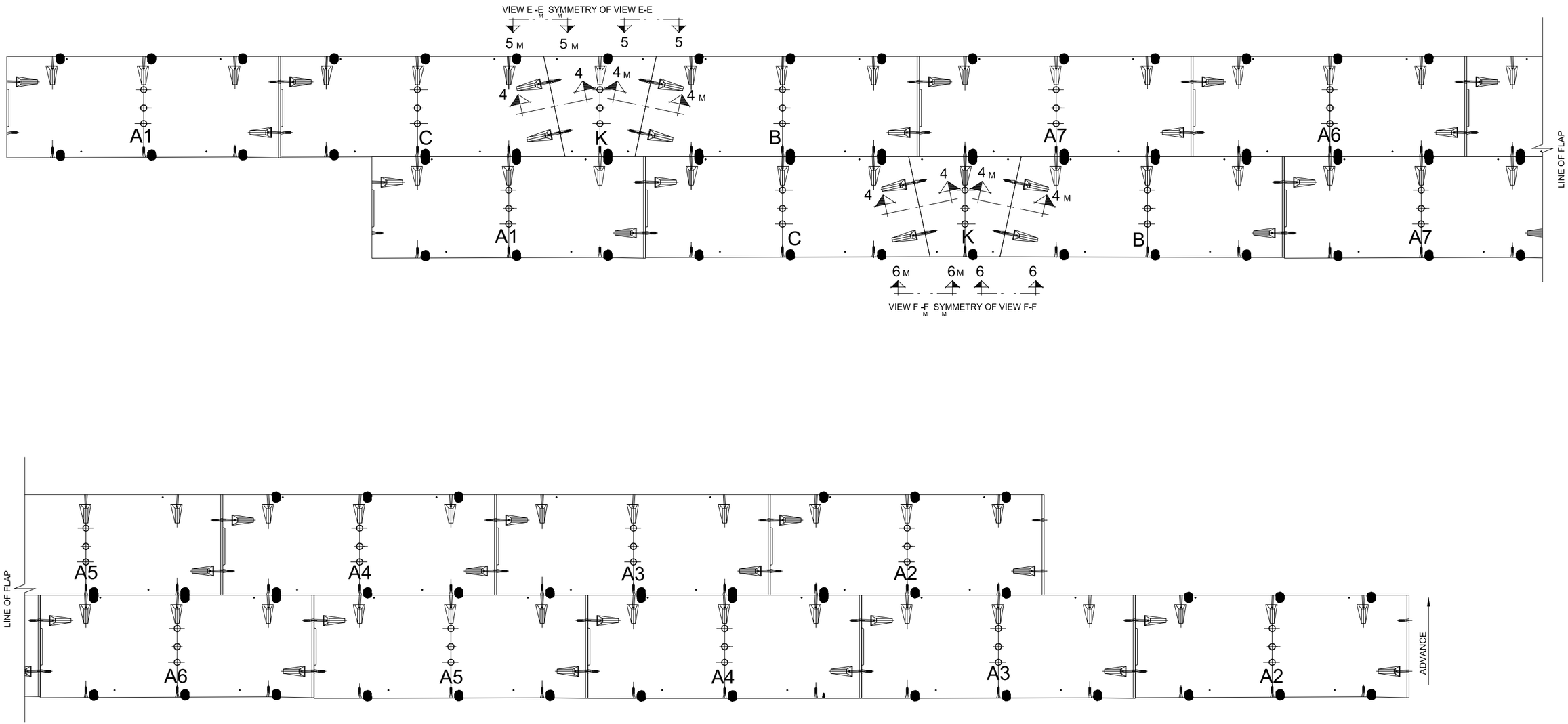

GENERAL VIEW (INNER FACE DEVELOPMENT
SCALE 1: 40

FILE NAME	IP_PWP:dms69908\46055-Txx-14TS029.DLV						
TIME	19-OCT-2010 15:50				REGION NO.	STATE	FED.AID PROJ.NO.
DATE	19-OCT-2010				10	WASH	
PLOTTED BY	groe				JOB NUMBER		
DESIGNED BY	C. CALVO						
ENTERED BY	C. CALVO						
CHECKED BY	S. TREYGER				CONTRACT NO.		LOCATION NO.
PROJ. ENGR.	S. EVERETT						
REGIONAL ADM.	R. PAANANEN	REVISION	DATE	BY			

RFP DESIGN
SUBMITTED BY
SEATTLE TUNNEL PARTNERS

NOT FOR CONSTRUCTION

Washington State Department of Transportation
U.S. Department of Transportation Federal Highway Administration
City of Seattle

ALASKAN WAY VIADUCT
REPLACEMENT PROJECT
SR 99 BORED TUNNEL
CONTRACT PACKAGE 14

GENERAL VIEW
(INNER FACE DEVELOPMENT)

TS029

SHEET 104 OF 208 SHEETS

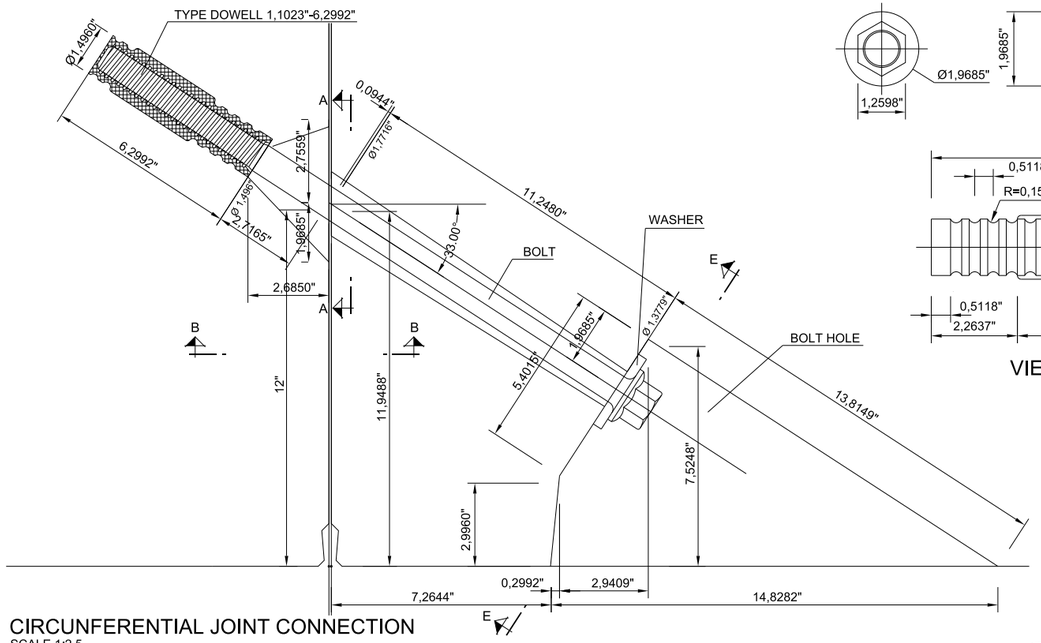

CIRCUNFERENTIAL JOINT CONNECTION
SCALE 1:2.5

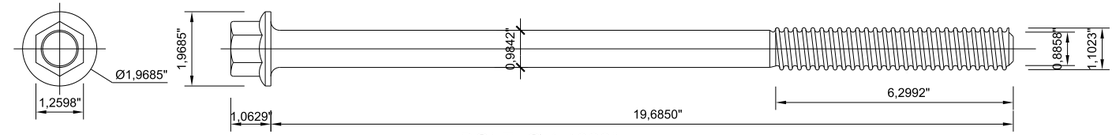

BOLT Ø 1,1023"

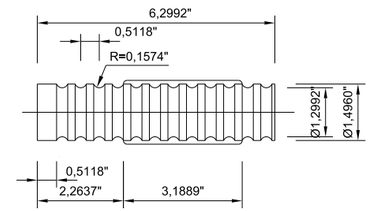

VIEW

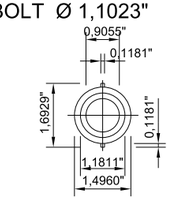

FRONT VIEW

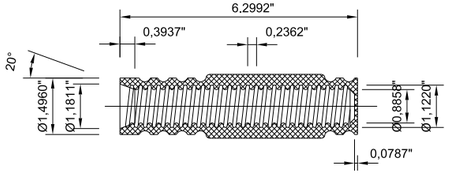

LONGITUDINAL SECTION

TYPE DOWELL 1,1023"-6,2992"
SCALE 1:2

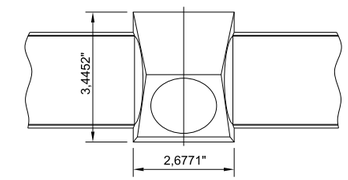

BOLT HOLE
VIEW C-C
SCALE 1:2

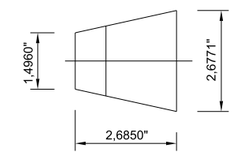

HOLE FOR TYPE DOWELL 1,1023-6,2992"
VIEW B-B
SCALE 1:2

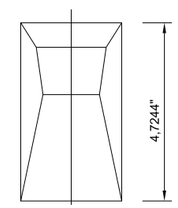

HOLE FOR TYPE DOWELL 1,1023-6,2992"
VIEW A-A
SCALE 1:2

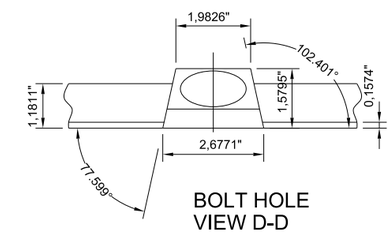

BOLT HOLE
VIEW D-D
SCALE 1:2

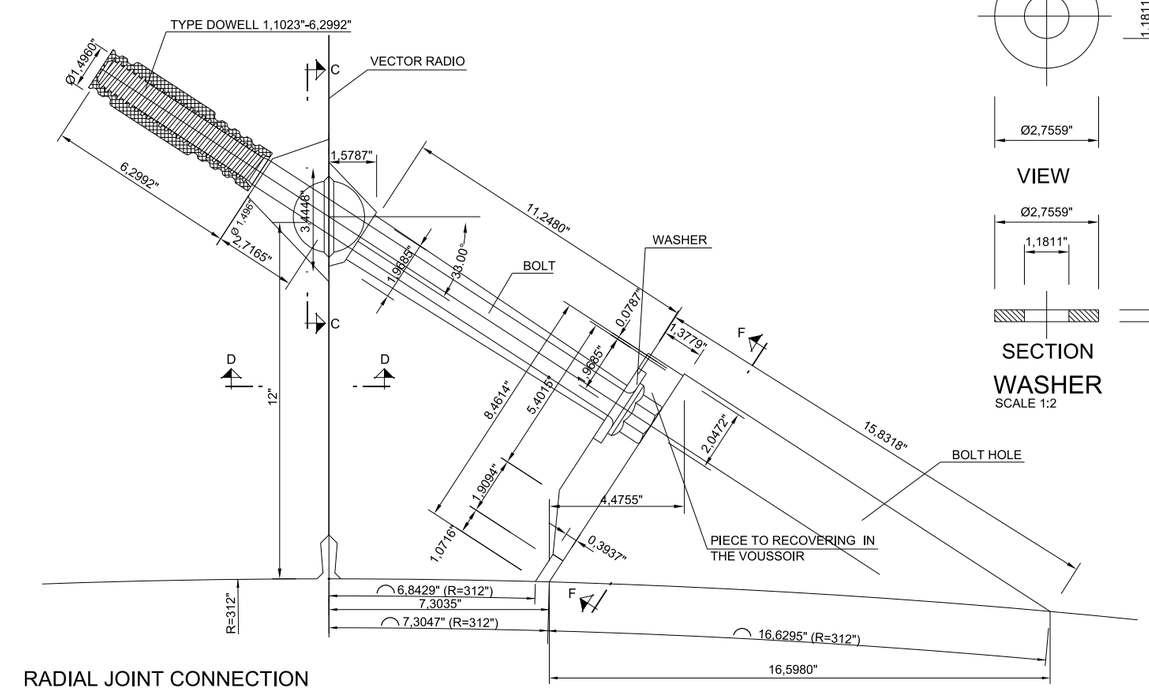

RADIAL JOINT CONNECTION
SCALE 1:2.5

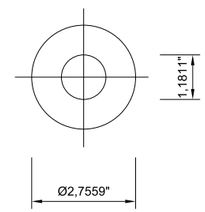

VIEW

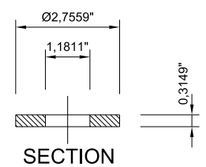

SECTION

WASHER
SCALE 1:2

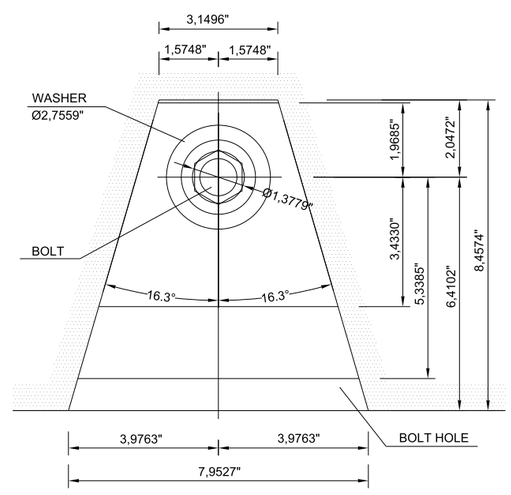

SECTION F-F
SCALE 1:2

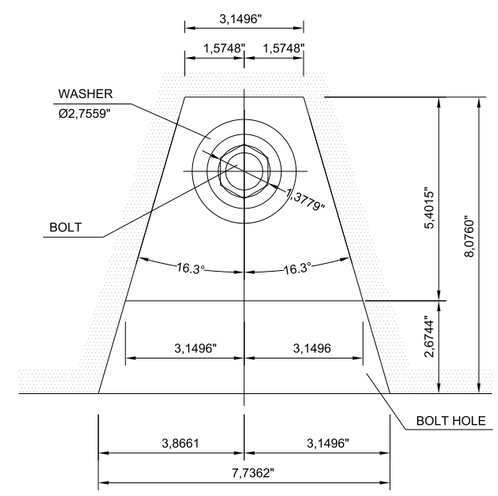

SECTION E-E (IN THE CENTRAL 2 SCREWS)
SCALE 1:2

FILE NAME	IP_PWP:dms69908\46055-Txx-14TS030.DLV					
TIME	19-OCT-2010 15:51					
DATE	19-OCT-2010					
PLOTTED BY	groe					
DESIGNED BY	C. CALVO					
ENTERED BY	C. CALVO					
CHECKED BY	S. TREYGER					
PROJ. ENGR.	S. EVERETT					
REGIONAL ADM.	R. PAANANEN	REVISION	DATE	BY		

REGION NO.	STATE	FED.AID PROJ.NO.
10	WASH	
JOB NUMBER		
CONTRACT NO.		LOCATION NO.

SEAMON TREYGER · STATE OF WASHINGTON · 20868 · REGISTERED PROFESSIONAL ENGINEER

RFP DESIGN
SUBMITTED BY
SEATTLE TUNNEL PARTNERS

NOT FOR CONSTRUCTION

Washington State Department of Transportation
U.S. Department of Transportation Federal Highway Administration
City of Seattle

ALASKAN WAY VIADUCT
REPLACEMENT PROJECT
SR 99 BORED TUNNEL
CONTRACT PACKAGE 14

DETAILS OF VOUSSOIR SCREWING
SECTIONS AND DETAILS

TS030

SHEET 105 OF 208 SHEETS

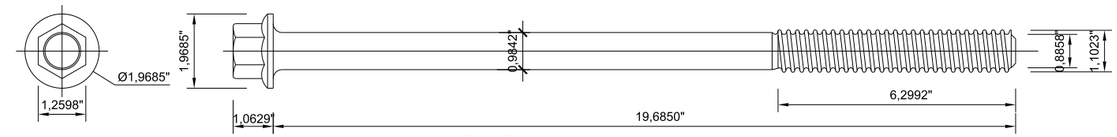

BOLT Ø 1,1023"

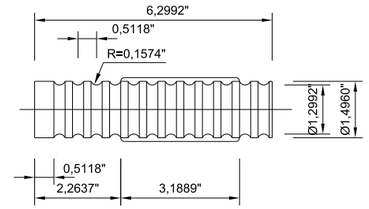

VIEW

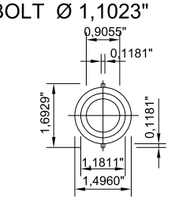

FRONT VIEW

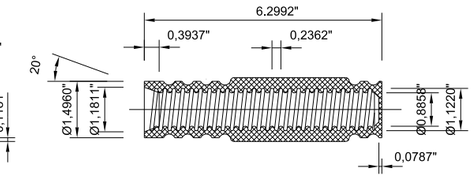

LONGITUDINAL SECTION

TYPE DOWELL 1,1023"-6,2992"

SCALE 1:2

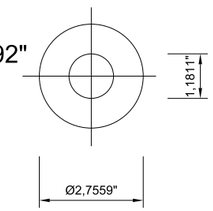

VIEW

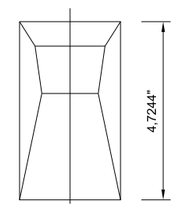

HOLE FOR TYPE DOWELL 1,1023-6,2992"
VIEW A-A

SCALE 1:2

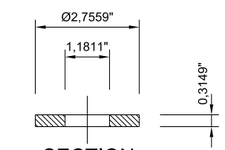

SECTION

WASHER

SCALE 1:2

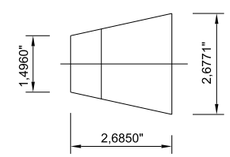

HOLE FOR TYPE DOWELL 1,1023-6,2992"
VIEW B-B

SCALE 1:2

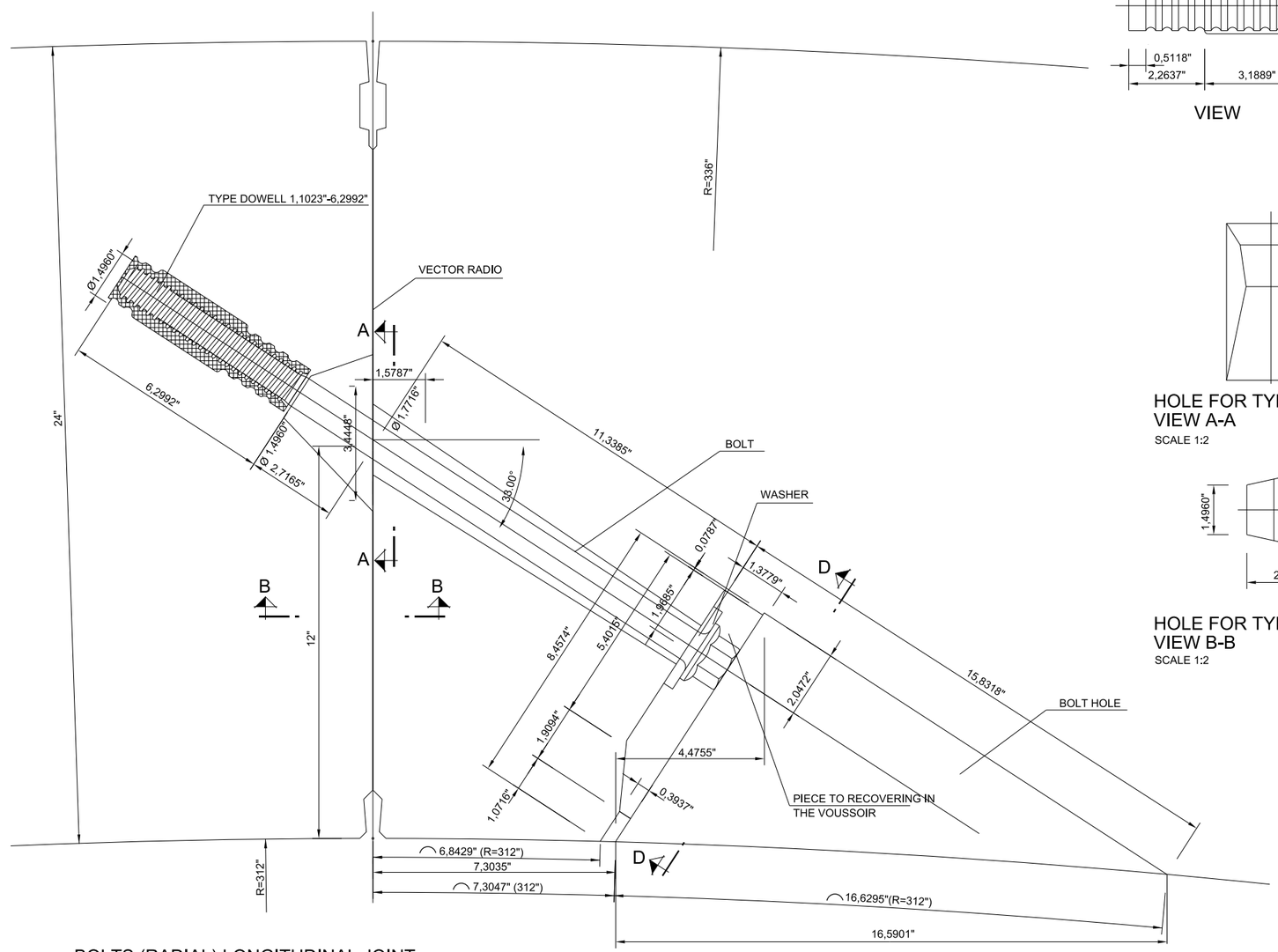

BOLTS (RADIAL) LONGITUDINAL JOINT

SCALE 1:2

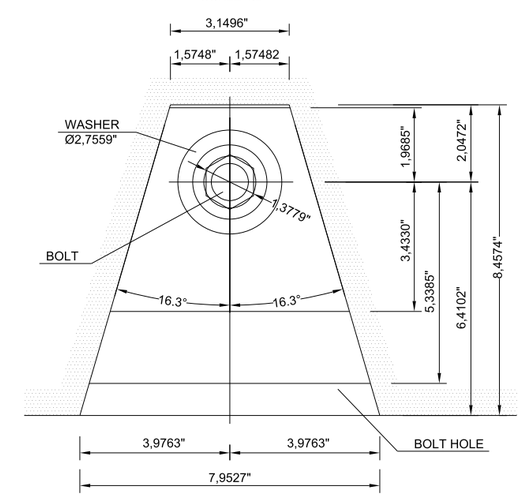

SECTION D-D

SCALE 1:2

FILE NAME	IP_PWP:dms69908\46055-Txx-14TS031.DLV				REGION NO.	STATE	FED.AID PROJ.NO.
TIME	19-OCT-2010 15:51				10	WASH	
DATE	19-OCT-2010				JOB NUMBER		
PLOTTED BY	groe						
DESIGNED BY	C. CALVO				CONTRACT NO.		LOCATION NO.
ENTERED BY	C. CALVO						
CHECKED BY	S. TREYGER						
PROJ. ENGR.	S. EVERETT						
REGIONAL ADM.	R. PAANANEN	REVISION	DATE	BY			

SEMYON TREYGER — STATE OF WASHINGTON — 20868 — STRUCTURAL ENGINEER — PROFESSIONAL ENGINEER

RFP DESIGN

SUBMITTED BY
SEATTLE TUNNEL PARTNERS

NOT FOR CONSTRUCTION

Washington State Department of Transportation

U.S. Department of Transportation Federal Highway Administration

City of Seattle

ALASKAN WAY VIADUCT
REPLACEMENT PROJECT
SR 99 BORED TUNNEL
CONTRACT PACKAGE 14

DETAILS OF VOUSSOIR SCREWING
SECTIONS AND DETAILS

TS031

SHEET 106 OF 208 SHEETS

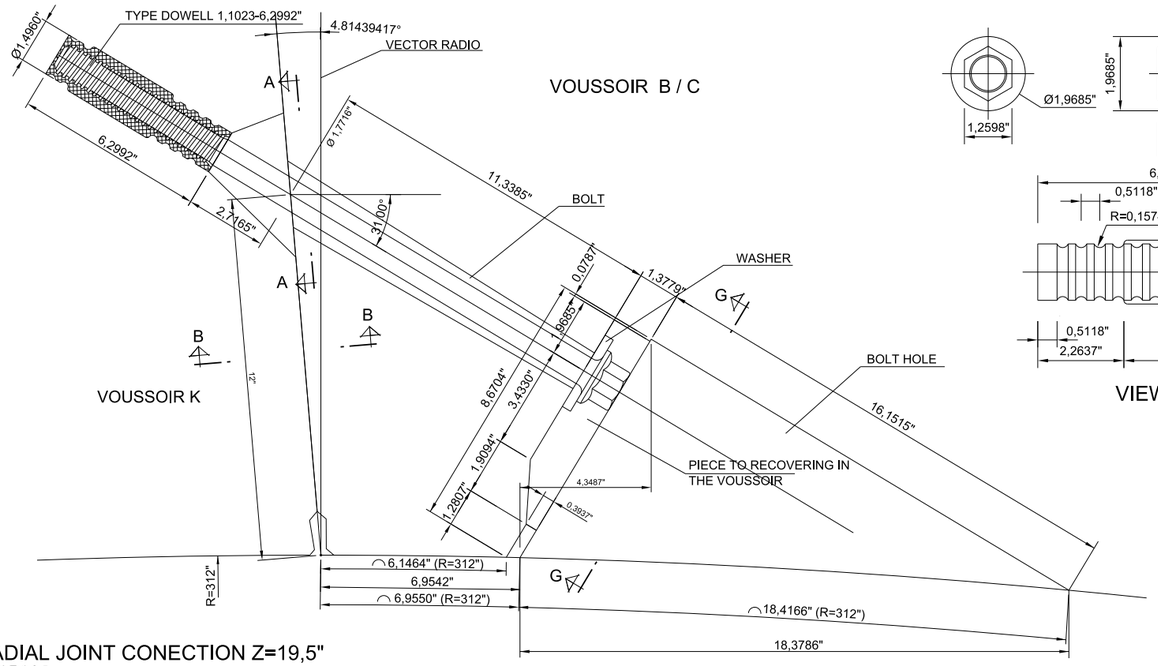

RADIAL JOINT CONECTION Z=19,5"
SCALE 1:2.5

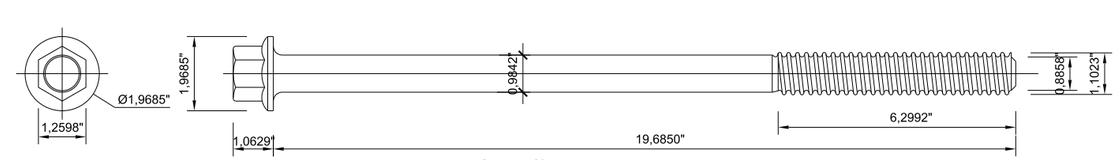

BOLT Ø 1,1023"

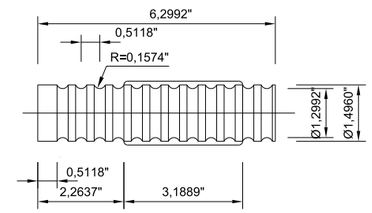

VIEW

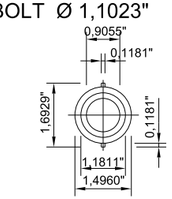

FRONT VIEW

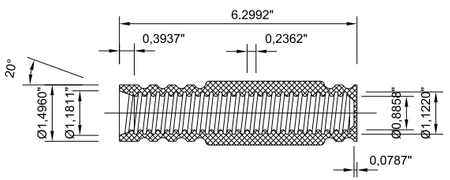

LONGITUDINAL SECTION

TYPE DOWELL 1,1023"-6,2992"
SCALE 1:2

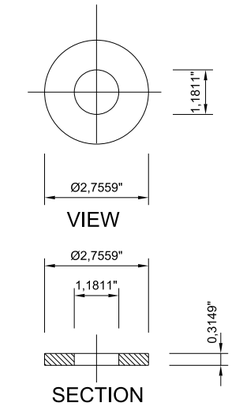

WASHER
SCALE 1:2

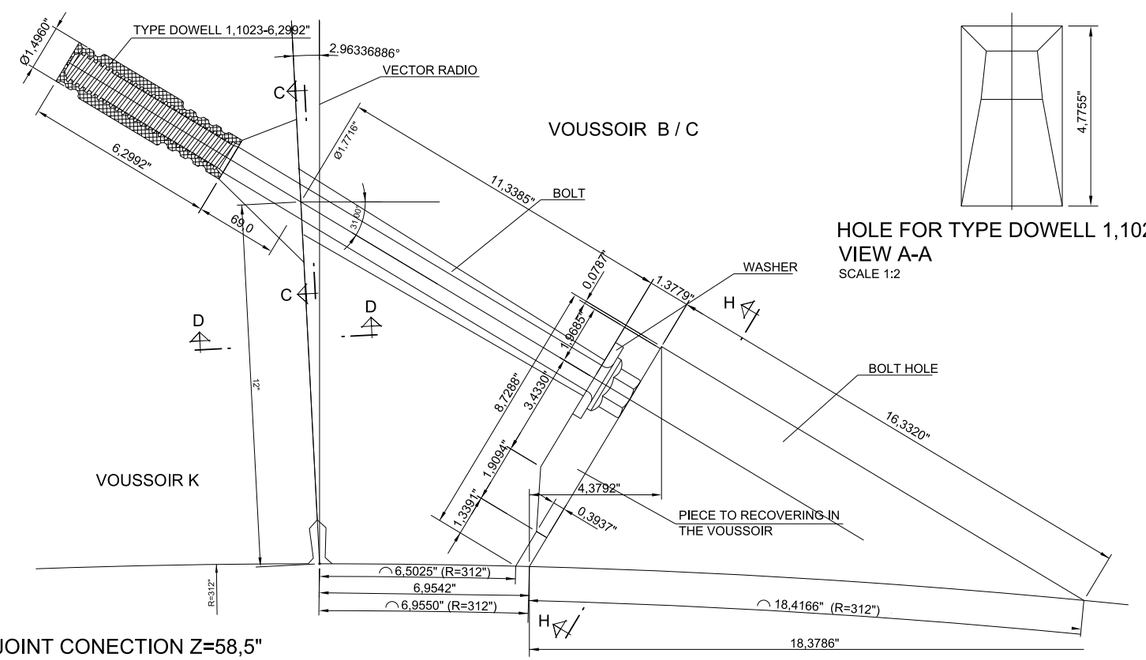

RADIAL JOINT CONECTION Z=58,5"
SCALE 1:2.5

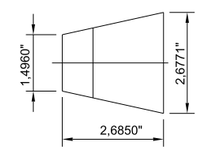

HOLE FOR TYPE DOWELL 1,1023-6,2992"
VIEW B-B
SCALE 1:2

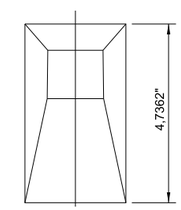

HOLE FOR TYPE DOWELL 1,1023-6,2992"
VIEW C-C
SCALE 1:2

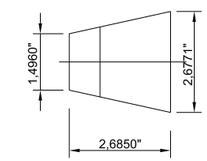

HOLE FOR DOWELL TYPE 1,1023-6,2992"
VIEW D-D
SCALE 1:2

HOLE FOR TYPE DOWELL 1,1023-6,2992"
VIEW A-A
SCALE 1:2

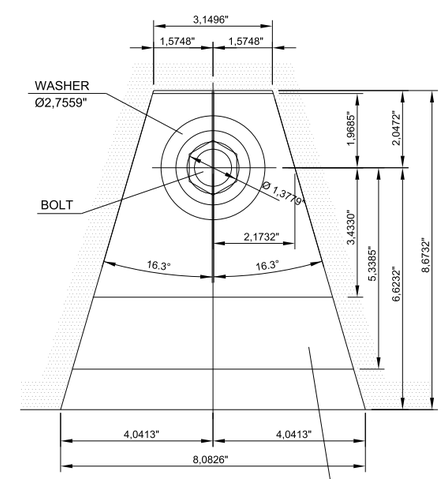

SECTION G-G
SCALE 1:2

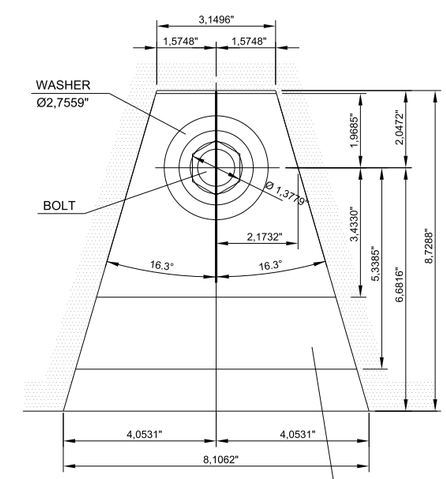

SECTION H-H
SCALE 1:2

FILE NAME	IP_PWP:dms69908\46055-Txx-14TS032.DLV						
TIME	19-OCT-2010 15:51				REGION NO.	STATE	FED.AID PROJ.NO.
DATE	19-OCT-2010				10	WASH	
PLOTTED BY	groe				JOB NUMBER		
DESIGNED BY	C. CALVO						
ENTERED BY	C. CALVO						
CHECKED BY	S. TREYGER				CONTRACT NO.		LOCATION NO.
PROJ. ENGR.	S. EVERETT						
REGIONAL ADM.	R. PAANANEN	REVISION	DATE	BY			

RFP DESIGN
SUBMITTED BY
SEATTLE TUNNEL PARTNERS

NOT FOR CONSTRUCTION

Washington State Department of Transportation
U.S. Department of Transportation Federal Highway Administration
City of Seattle

ALASKAN WAY VIADUCT
REPLACEMENT PROJECT
SR 99 BORED TUNNEL
CONTRACT PACKAGE 14

DETAILS OF VOUSSOIR SCREWING
SECTIONS AND DETAILS

TS032

SHEET 107 OF 208 SHEETS

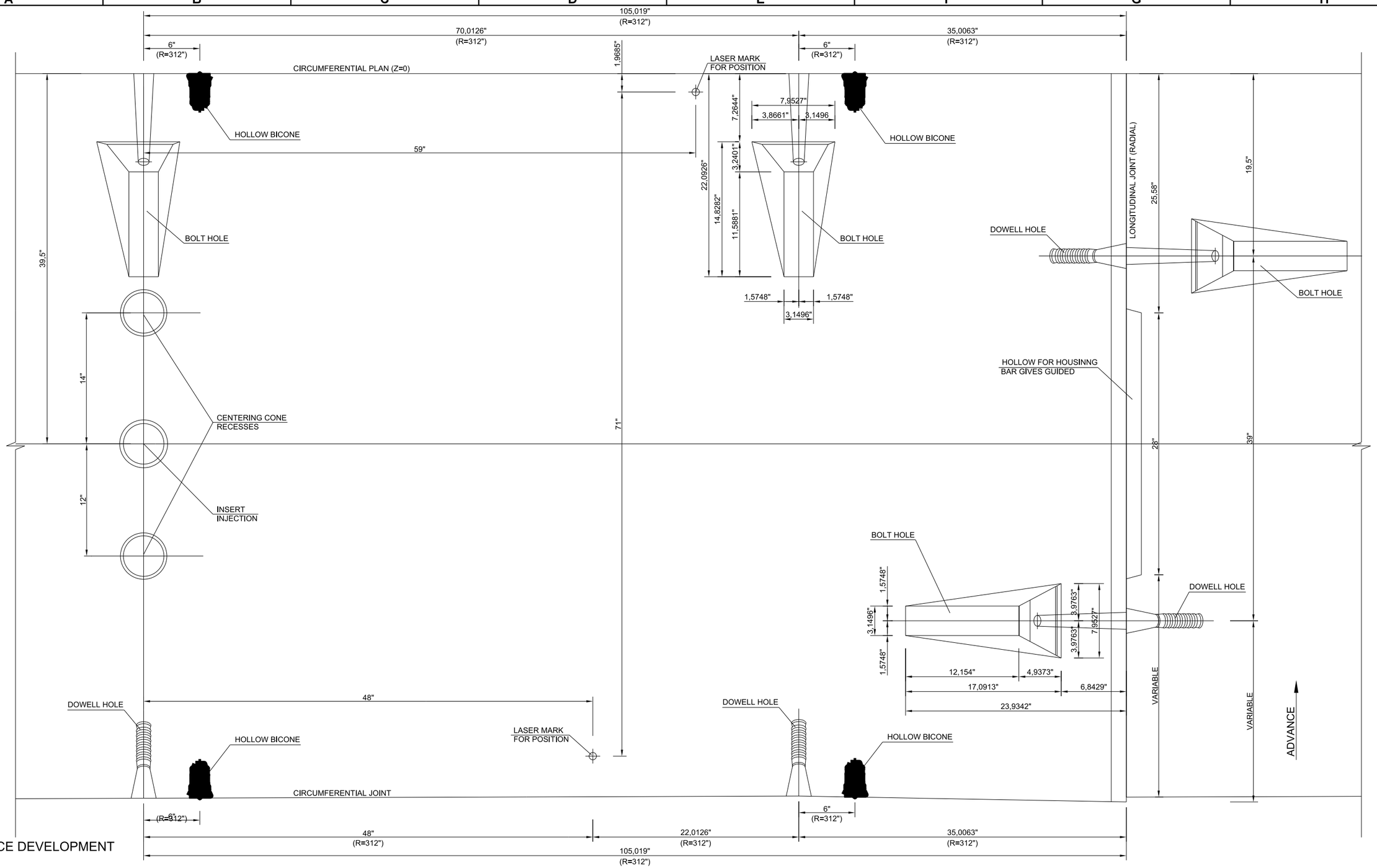

INNER FACE DEVELOPMENT
SCALE 1: 5

FILE NAME	IP_PWP:dms69908\46055-Txx-14TS033.DLV						
TIME	19-OCT-2010 15:51				REGION NO. 10	STATE WASH	FED.AID PROJ.NO.
DATE	19-OCT-2010				JOB NUMBER		
PLOTTED BY	groe						
DESIGNED BY	C. CALVO						
ENTERED BY	C. CALVO				CONTRACT NO.		LOCATION NO.
CHECKED BY	S. TREYGER						
PROJ. ENGR.	S. EVERETT						
REGIONAL ADM.	R. PAANANEN	REVISION	DATE	BY			

RFP DESIGN
SUBMITTED BY
SEATTLE TUNNEL PARTNERS

NOT FOR CONSTRUCTION

Washington State Department of Transportation
U.S. Department of Transportation Federal Highway Administration
City of Seattle

ALASKAN WAY VIADUCT
REPLACEMENT PROJECT
SR 99 BORED TUNNEL
CONTRACT PACKAGE 14

VOUSSOIR GEOMETRY
INNER FACE DEVELOPMENT

TS033

SHEET 108 OF 208 SHEETS

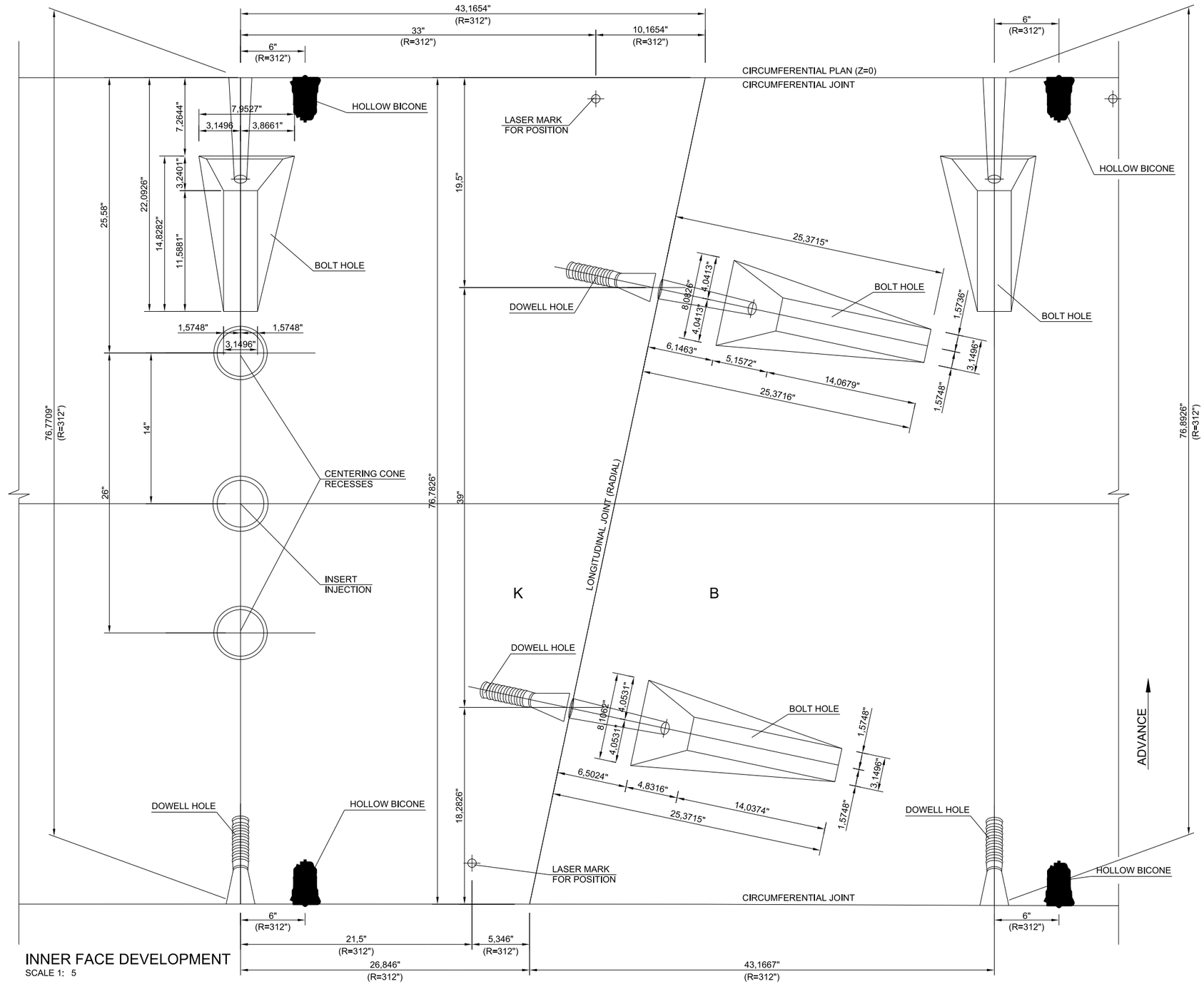

INNER FACE DEVELOPMENT
SCALE 1: 5

FILE NAME	IP_PWP:dms69908\46055-Txx-14TS034.DLV				REGION NO.	STATE	FED.AID PROJ.NO.
TIME	19-OCT-2010 15:52				10	WASH	
DATE	19-OCT-2010				JOB NUMBER		
PLOTTED BY	groe						
DESIGNED BY	C. CALVO				CONTRACT NO.		LOCATION NO.
ENTERED BY	C. CALVO						
CHECKED BY	S. TREYGER						
PROJ. ENGR.	S. EVERETT						
REGIONAL ADM.	R. PAANANEN	REVISION	DATE	BY			

SEMYON TREYGER STATE OF WASHINGTON 20868 STRUCTURAL ENGINEER PROFESSIONAL ENGINEER

RFP DESIGN
SUBMITTED BY
SEATTLE TUNNEL PARTNERS

NOT FOR CONSTRUCTION

Washington State Department of Transportation
U.S. Department of Transportation Federal Highway Administration
City of Seattle

ALASKAN WAY VIADUCT
REPLACEMENT PROJECT
SR 99 BORED TUNNEL
CONTRACT PACKAGE 14

VOUSSOIR GEOMETRY
INNER FACE DEVELOPMENT

TS034

SHEET 109 OF 208 SHEETS

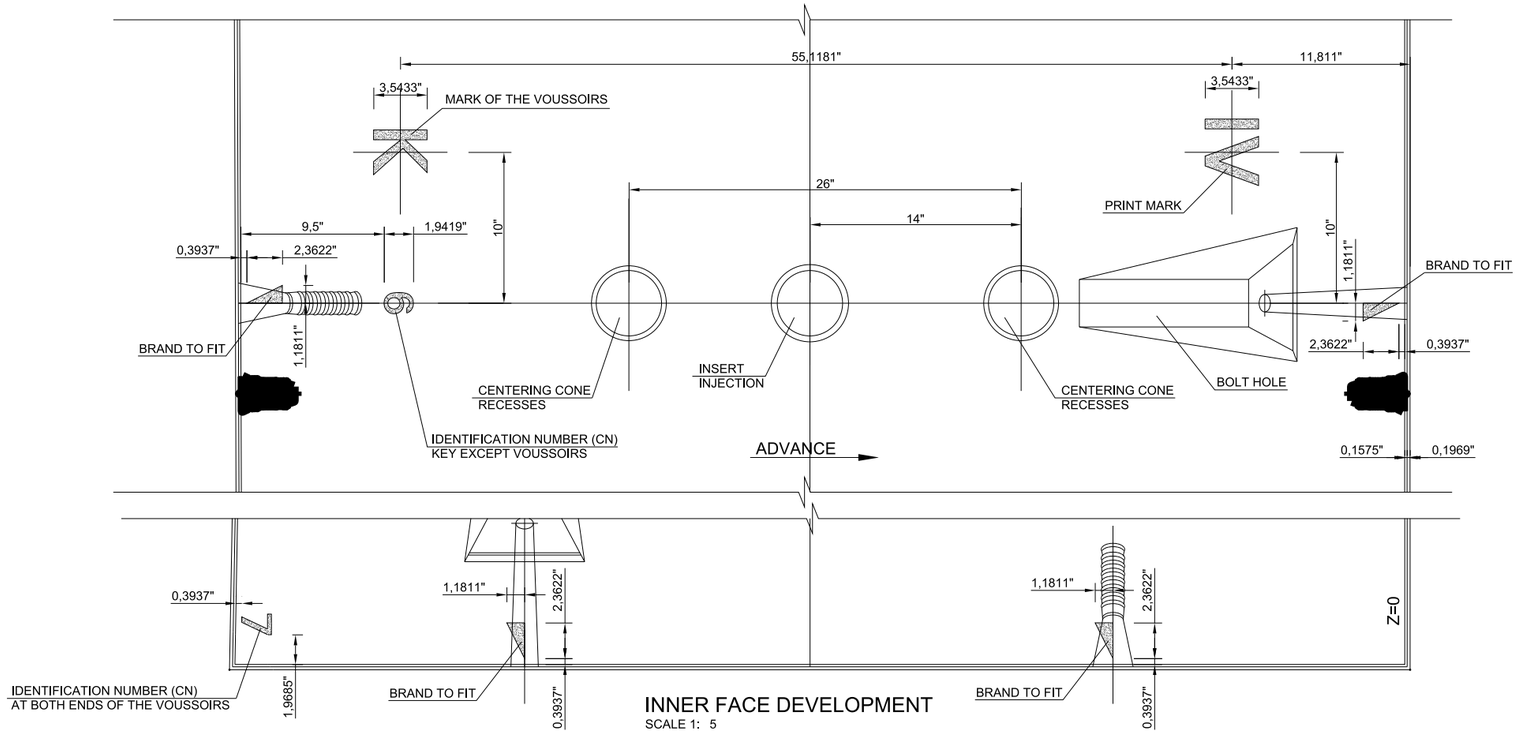

INNER FACE DEVELOPMENT
SCALE 1: 5

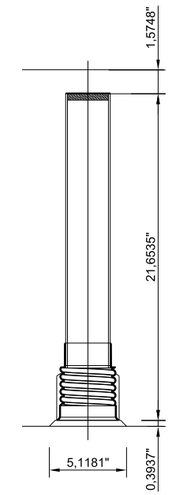

DETAIL G
SCALE 1: 5

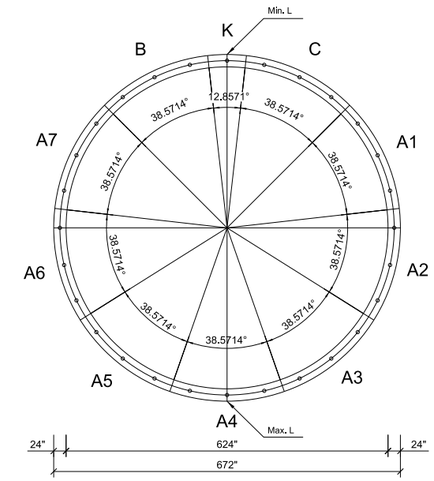

RING DEFINITION
S/E

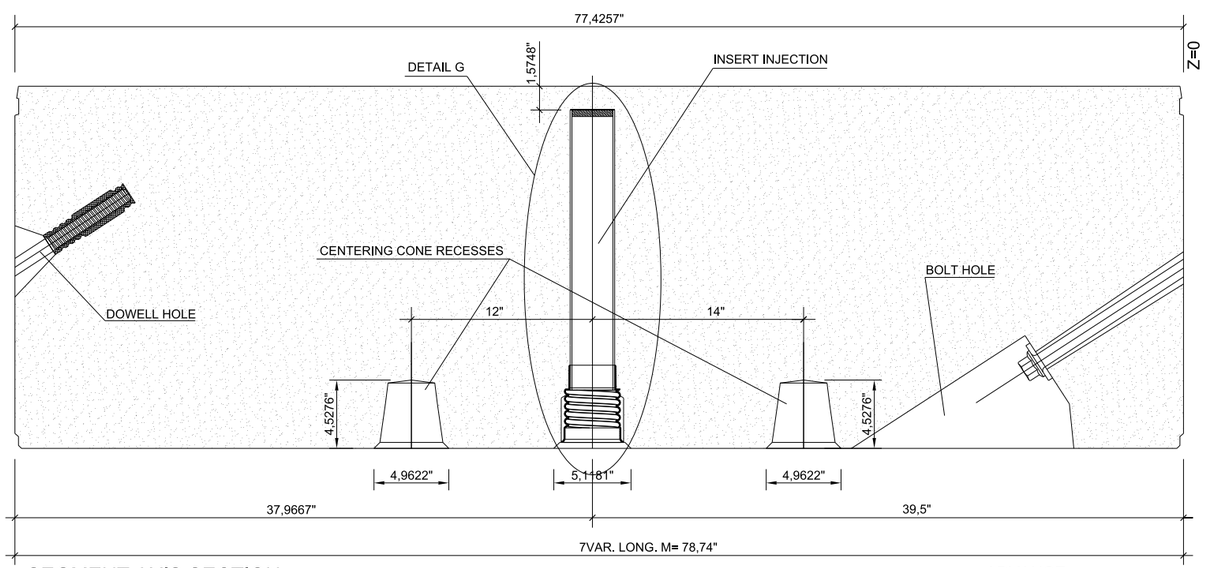

SEGMENT AXIS SECTION
SCALE 1: 5

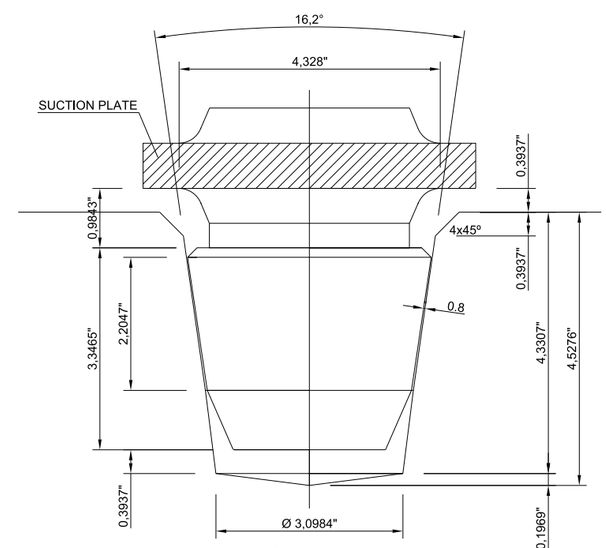

DETAILS OF CONE CENTER
SCALE 1: 1.25

FOR ALL BRANDS:
PROFUNDITY = 0.59055 INCHES
LETTERS AND NUMBERS FOR IMAGE REFLECTED IN THE MOLD

FILE NAME	IP_PWP:dms69908\46055-Txx-14TS035.DLV				REGION NO.	STATE	FED.AID PROJ.NO.
TIME	19-OCT-2010 15:52				10	WASH	
DATE	19-OCT-2010				JOB NUMBER		
PLOTTED BY	groe						
DESIGNED BY	C. CALVO						
ENTERED BY	C. CALVO				CONTRACT NO.		LOCATION NO.
CHECKED BY	S. TREYGER						
PROJ. ENGR.	S. EVERETT						
REGIONAL ADM.	R. PAANANEN	REVISION	DATE	BY			

SIMON TREYGER STATE OF WASHINGTON 20868 STRUCTURAL ENGINEER PROFESSIONAL ENGINEER

RFP DESIGN
SUBMITTED BY
SEATTLE TUNNEL PARTNERS

NOT FOR CONSTRUCTION

Washington State Department of Transportation
U.S. Department of Transportation Federal Highway Administration
City of Seattle

ALASKAN WAY VIADUCT
REPLACEMENT PROJECT
SR 99 BORED TUNNEL
CONTRACT PACKAGE 14

VOUSSOIR GEOMETRY
DETAILS

TS035

SHEET 110 OF 208 SHEETS

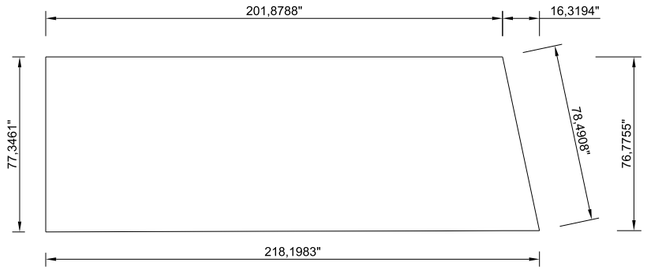

VOUSSOIRS C

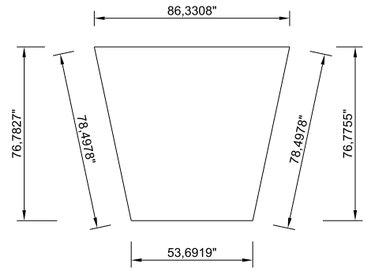

VOUSSOIRS K

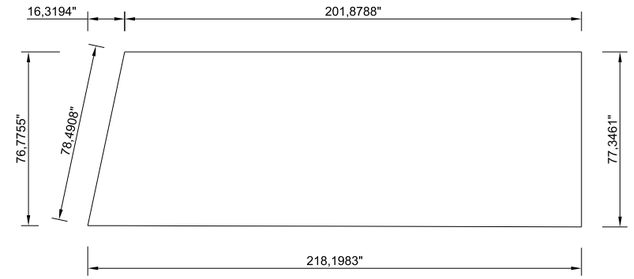

VOUSSOIRS B

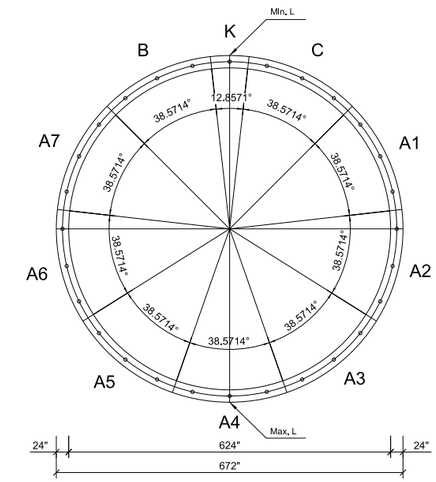

RING DEFINITION
S/E

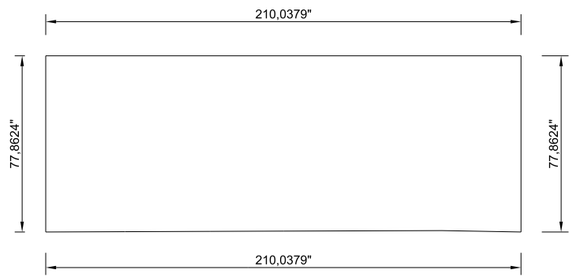

VOUSSOIRS A1 Y (VOUSSOIRS A7 SIMÉTRICA)

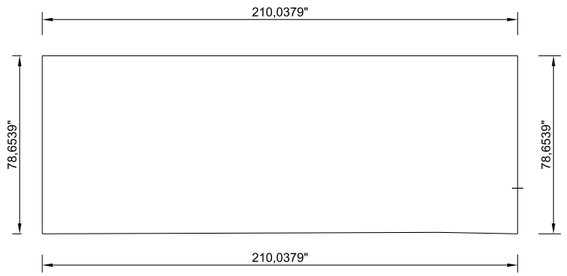

VOUSSOIRS A2 Y (VOUSSOIRS A6 SIMÉTRICA)

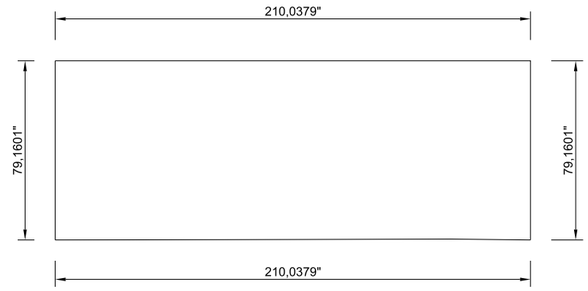

VOUSSOIRS A3 Y (VOUSSOIRS A5 SIMÉTRICA)

VOUSSOIRSS SEALED
SCALE 1: 30

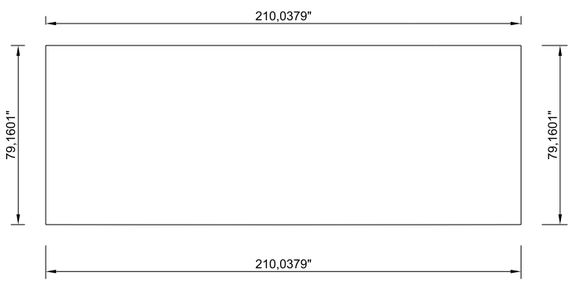

VOUSSOIRS A4

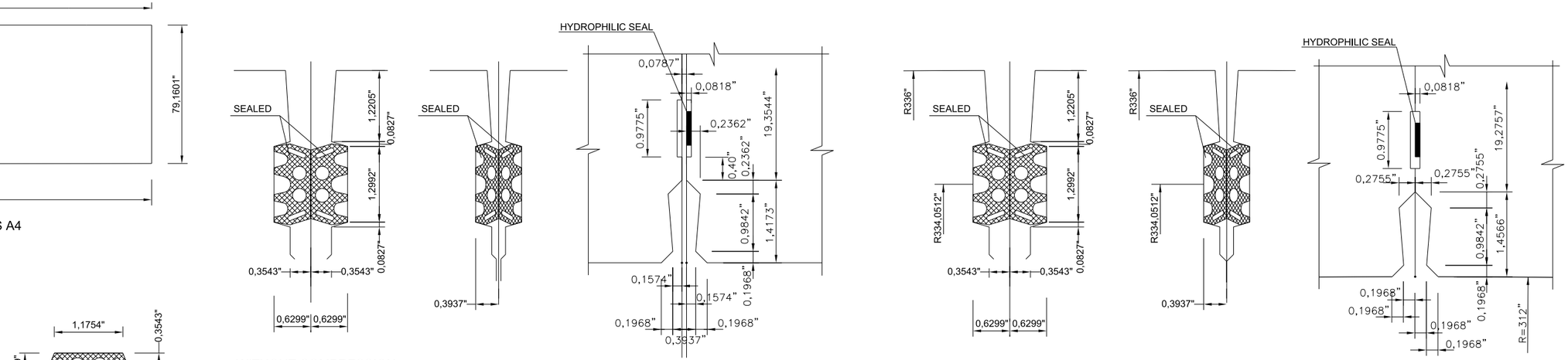

WITHOUT COMPRESSION | COMPRESSED | CIRCUMFERENTIAL JOINT

CIRCUMFERENTIAL BOARD

WITHOUT COMPRESSION | COMPRESSED | LONGITUDINAL JOINT (RADIAL)

LONGITUDINAL BOARD

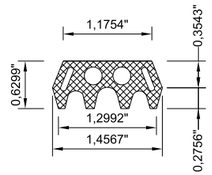

SEALING PROFILE
SCALE 1: 1

SEALING DETAILS
SCALE 1: 1

FILE NAME	IP_PWP:dms69908\46055-Txx-14TS036.DLV						
TIME	19-OCT-2010 15:52				REGION NO.	STATE	FED.AID PROJ.NO.
DATE	19-OCT-2010				10	WASH	
PLOTTED BY	groe				JOB NUMBER		
DESIGNED BY	C. CALVO						
ENTERED BY	C. CALVO						
CHECKED BY	S. TREYGER				CONTRACT NO.		LOCATION NO.
PROJ. ENGR.	S. EVERETT						
REGIONAL ADM.	R. PAANANEN	REVISION	DATE	BY			

STEPHEN TREYGER — STATE OF WASHINGTON — 20868 — STRUCTURAL ENGINEER — PROFESSIONAL ENGINEER

RFP DESIGN
SUBMITTED BY
SEATTLE TUNNEL PARTNERS

NOT FOR CONSTRUCTION

Washington State Department of Transportation
U.S. Department of Transportation Federal Highway Administration
City of Seattle

ALASKAN WAY VIADUCT
REPLACEMENT PROJECT
SR 99 BORED TUNNEL
CONTRACT PACKAGE 14

VOUSSOIR GEOMETRY
SEALING DETAILS

TS036

SHEET 111 OF 208 SHEETS

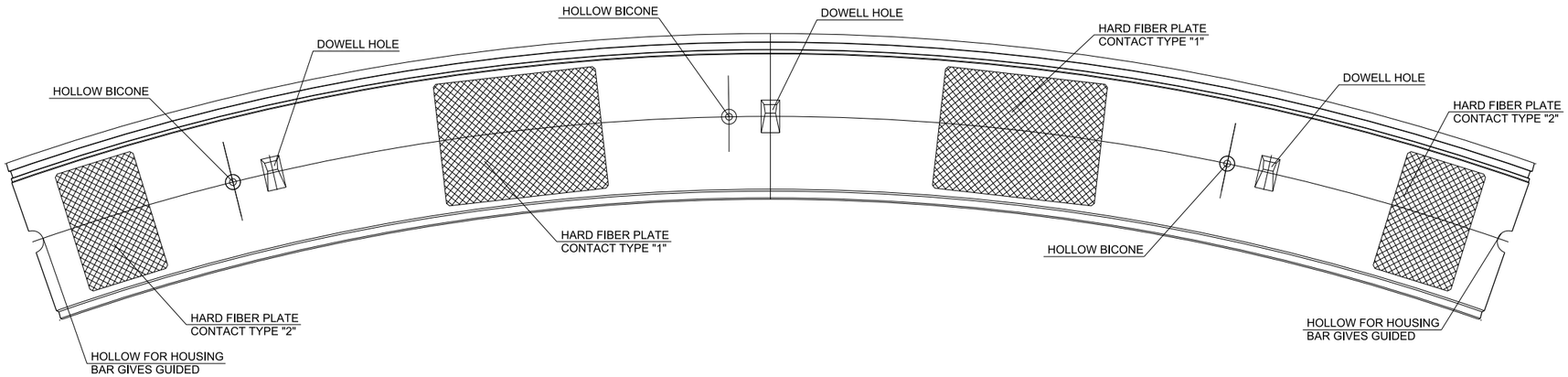

PLACEMENT OF LABELS IN VOUSSOIRSS A1, A2, A3, A4, A5, A6 Y A7
SCALE 1: 10

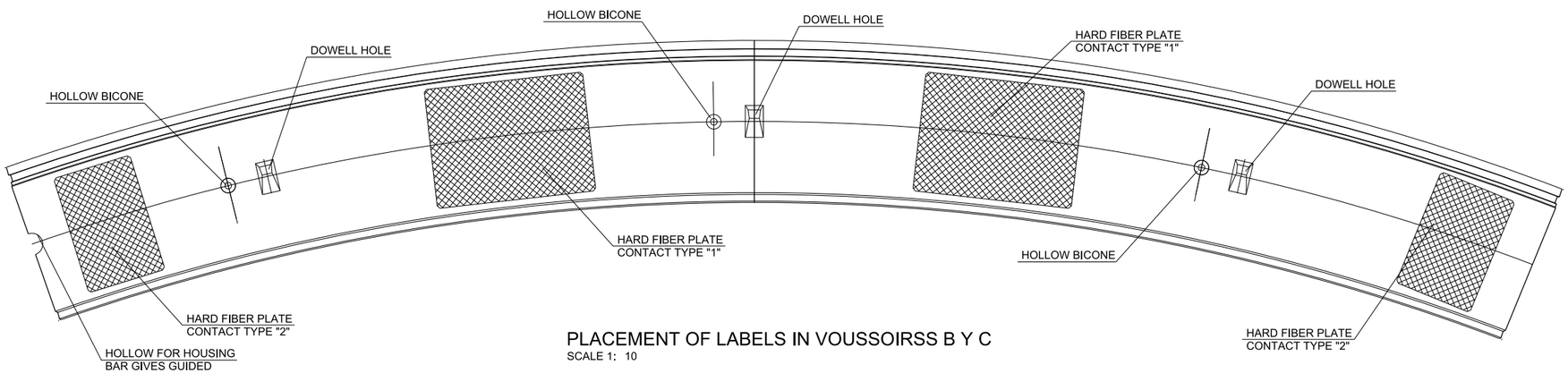

PLACEMENT OF LABELS IN VOUSSOIRSS B Y C
SCALE 1: 10

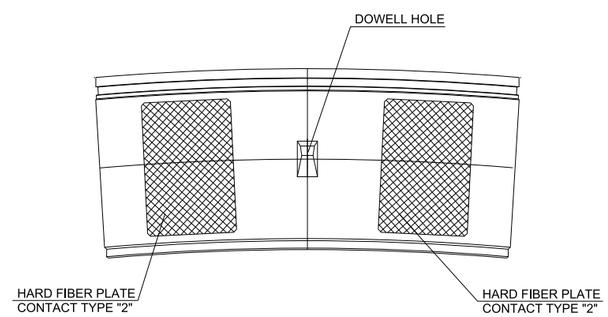

PLACEMENT OF LABELS IN VOUSSOIRS K
SCALE 1: 10

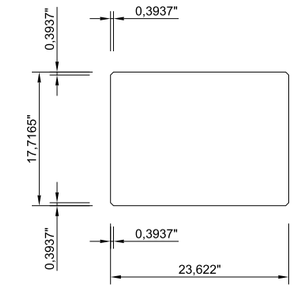

PLATE TYPE 1

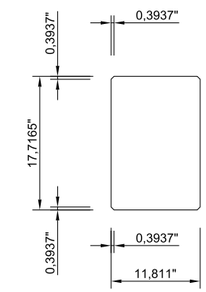

PLATE TYPE 2

HARD FIBER PLATE CONTACT
IMPREGNATED WITH BITUMEN, THICKNESS=3,2mm.
SCALE 1: 10

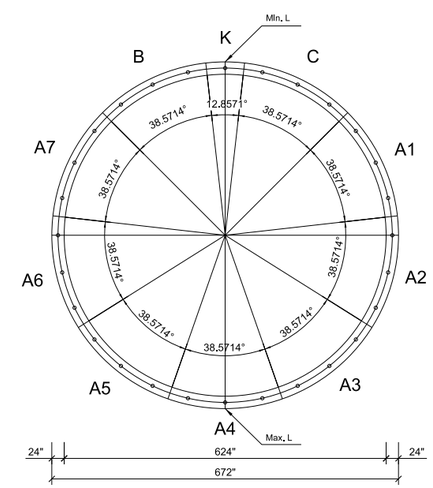

RING DEFINITION
S/E

FILE NAME	IP_PWP:dms69908\46055-Txx-14TS037.DLV				REGION NO. 10	STATE WASH	FED.AID PROJ.NO.
TIME	19-OCT-2010 15:53				JOB NUMBER		
DATE	19-OCT-2010						
PLOTTED BY	gree				CONTRACT NO.		LOCATION NO.
DESIGNED BY	C. CALVO						
ENTERED BY	C. CALVO						
CHECKED BY	S. TREYGER						
PROJ. ENGR.	S. EVERETT						
REGIONAL ADM.	R. PAANANEN	REVISION	DATE	BY			

SEMYON TREYGER
STATE OF WASHINGTON
20868
STRUCTURAL ENGINEER
PROFESSIONAL ENGINEER

RFP DESIGN
SUBMITTED BY
SEATTLE TUNNEL PARTNERS

NOT FOR CONSTRUCTION

Washington State Department of Transportation
U.S. Department of Transportation Federal Highway Administration
City of Seattle

ALASKAN WAY VIADUCT
REPLACEMENT PROJECT
SR 99 BORED TUNNEL
CONTRACT PACKAGE 14

VOUSSOIR GEOMETRY
FITTING PLATE

TS037

SHEET 112 OF 208 SHEETS

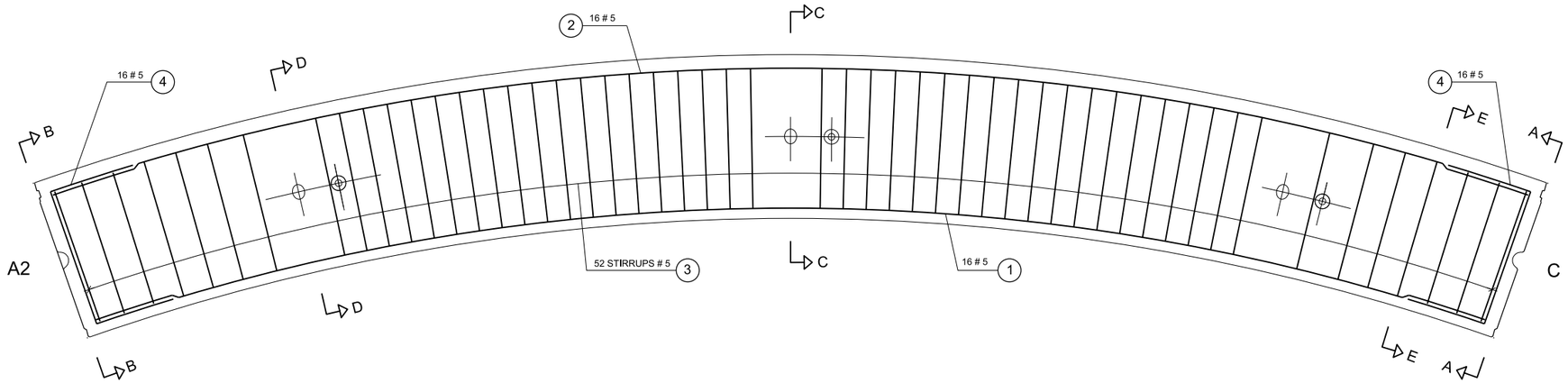

SEGMENT VIEW - A1
(FROM THE SHIELD) Z=0
SCALE A-1= 1/10
A-3= 1/20

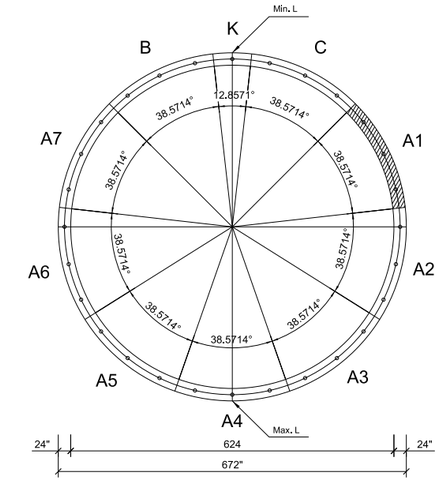

RING DEFINITION
S/E

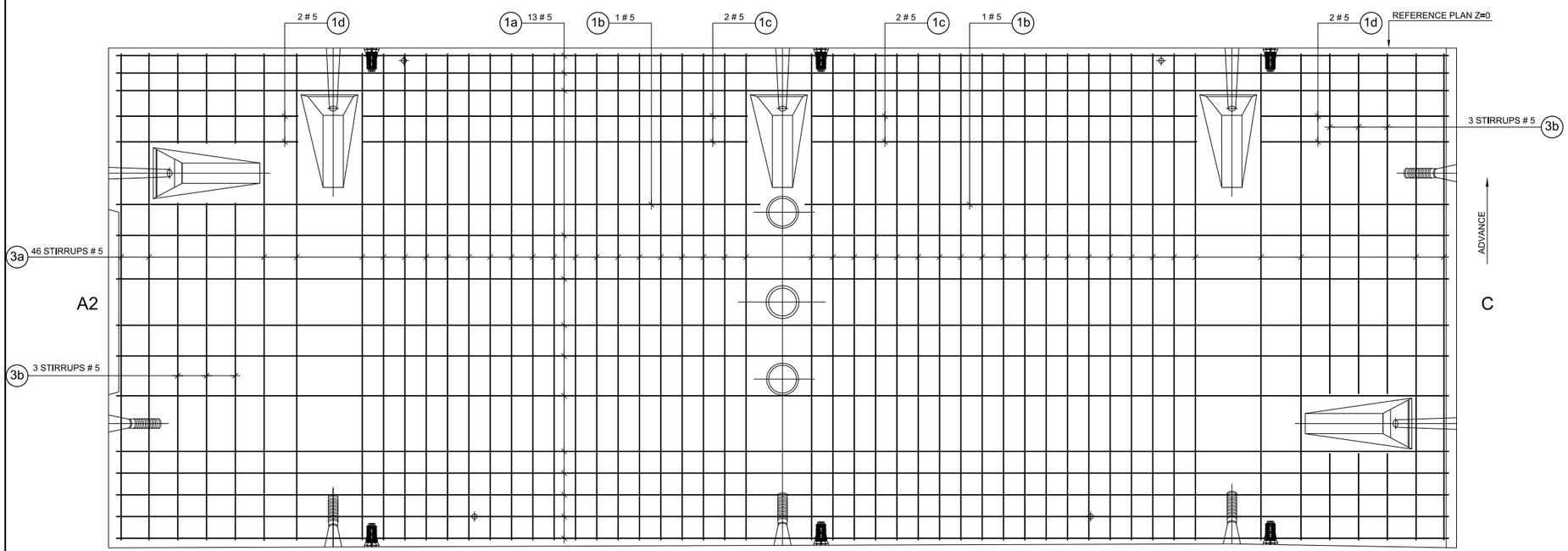

INNER FACE DEVELOPMENT
OF SEGMENT TYPE - A1
SCALE A-1= 1/10
A-3= 1/20

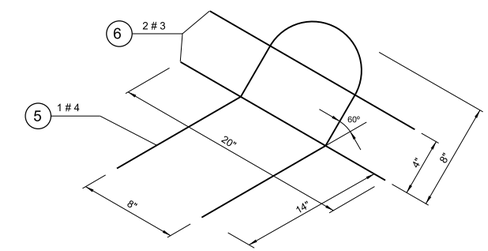

DETAIL OF REINFORCEMENT
IN BOLTS (TIP)

FILE NAME	IP_PWP:dms69908\46055-Txx-14TS038.DLV					
TIME	19-OCT-2010 15:53					
DATE	19-OCT-2010					
PLOTTED BY	groe					
DESIGNED BY	C. CALVO					
ENTERED BY	C. CALVO					
CHECKED BY	S. TREYGER					
PROJ. ENGR.	S. EVERETT					
REGIONAL ADM.	R. PAANANEN	REVISION	DATE	BY		

REGION NO.	STATE	FED.AID PROJ.NO.
10	WASH	
JOB NUMBER		
CONTRACT NO.		LOCATION NO.

SEAN VON TREYGER
STATE OF WASHINGTON
20868
STRUCTURAL ENGINEER
PROFESSIONAL ENGINEER

RFP DESIGN
SUBMITTED BY
SEATTLE TUNNEL PARTNERS

NOT FOR CONSTRUCTION

Washington State Department of Transportation
U.S. Department of Transportation Federal Highway Administration
City of Seattle

ALASKAN WAY VIADUCT REPLACEMENT PROJECT
SR 99 BORED TUNNEL
CONTRACT PACKAGE 14

SEGMENT
A1 REINFOREMENT

TS038

SHEET 113 OF 208 SHEETS

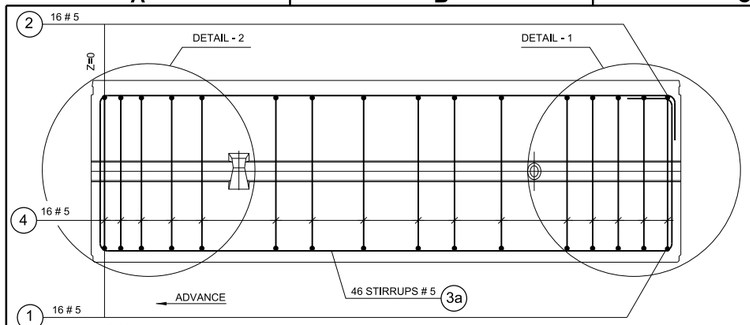

VIEW A-A
SCALE A-1= 1/10
A-3= 1/20

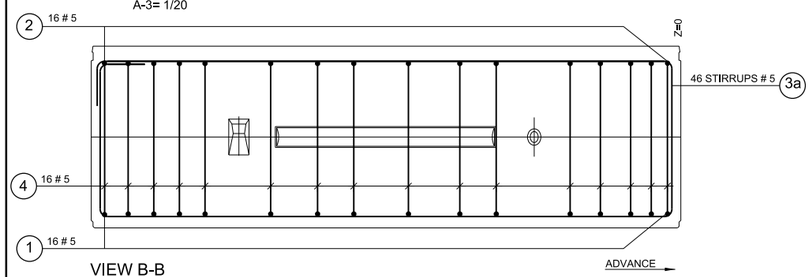

VIEW B-B
SCALE A-1= 1/10
A-3= 1/20

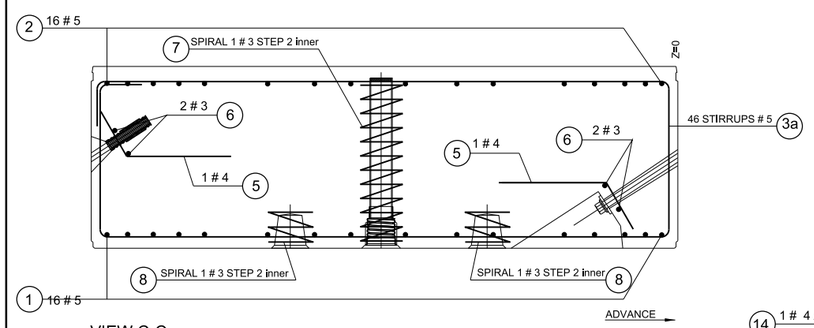

VIEW C-C
SCALE A-1= 1/10
A-3= 1/20

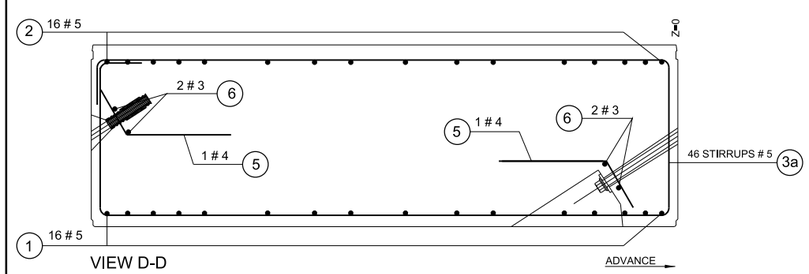

VIEW D-D
SCALE A-1= 1/10
A-3= 1/20

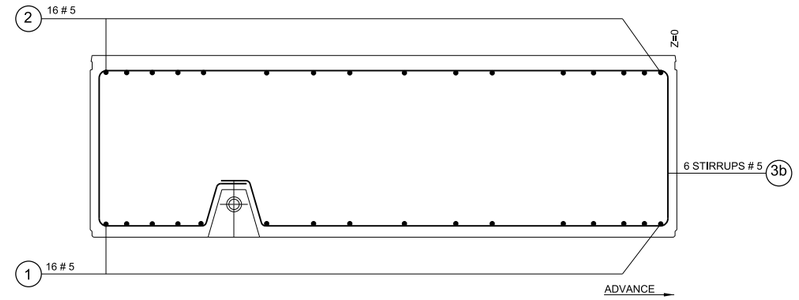

VIEW E-E
SCALE A-1= 1/10
A-3= 1/20

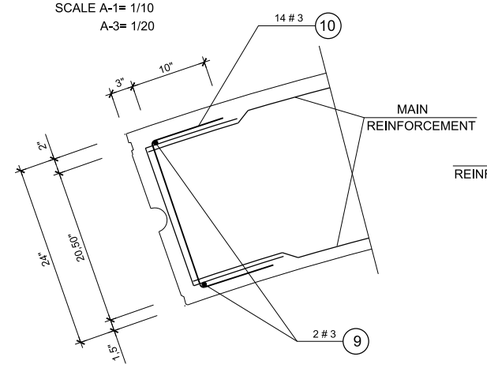

RADIAL JOINT REINFORCEMENT (SPALLING)
SCALE A-1= 1/10
A-3= 1/20

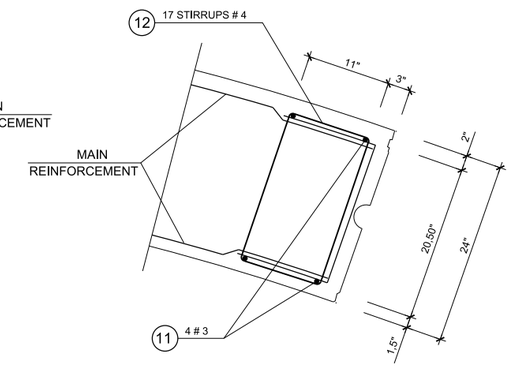

RADIAL JOINT REINFORCEMENT (BURSTING)
SCALE A-1= 1/10
A-3= 1/20

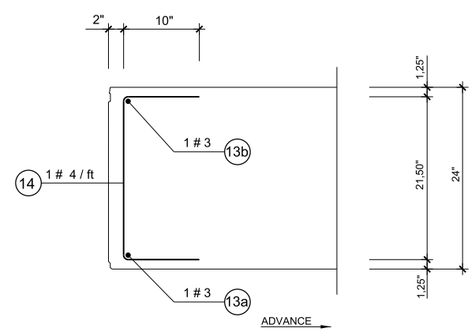

DETAIL - 1
SCALE A-1= 1/10
A-3= 1/20

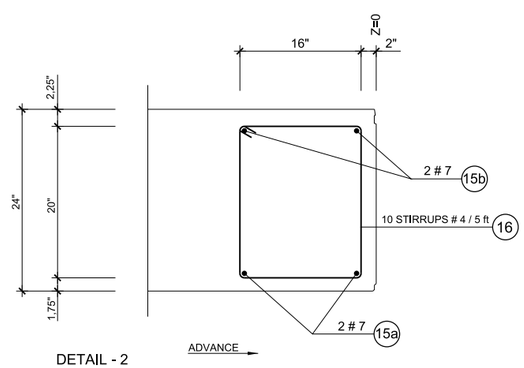

DETAIL - 2
SCALE A-1= 1/10
A-3= 1/20

BREAK UP OF REINFORCEMENT IN SEGMENT A1

ITEM	SKETCH	# DIAMETER OF IN.	LENGHT IN INCHES	NUMBER OF BARS	WEIGHT lb PER UT.	WEIGHT lb TOT. lb	
1a	R=314,4375"	5	208,6786"	13	18,1376	235,7888	1
1b	R=314,4375"	5	100,3426"	2	8,7214"	17,4428	
1c	R=314,4375"	5	60"	4	5,215	20,8600	
1d	R=314,4375"	5	28,3909"	4	2,4676	9,8704	
2	R=333,0625"	5	221,2169"	16	19,2274	307,6384	
3a	6" 9" 75,3571" 20,5"	5	203,7142"	46	17,7061	814,4806	
3b	75,3571" 12,6" 6" 5 20,5"	5	209,9205"	6	18,2455	109,473	2
4	12" 18,625" 12"	5	42,625"	32	3,7048	118,5536	
5		4	48,5663"	10	2,7035	27,0350	
6	20"	3	20"	20	0,6266	12,5320	
7	STEP=2in. RADIO= 3in.	3	226,1947"	1	7,0874	7,0874	
8	STEP=2in. RADIO= 3in.	3	56,5487"	2	1,7718	3,5436	
9	75,3571	3	75,3571"	4	2,3611	9,4444	3
10	10" 20,5" 10"	3	40,50"	28	1,2676	35,4942	
11	75,3571	3	75,3571"	8	2,3611	18,8888	
12	5" 11" 20,5"	4	73"	34	4,0636	138,16	
13a	R=313,6875"	3	209,1739	1	6,5541	6,5541	
13b	R=334,3125"	3	223,0586"	1	6,9892	6,9892	4
14	10" 21,5" 10"	4	41,5"	18	2,3101	41,5818	
15a	R=314,6875"	7	209,8471"	2	35,6866	71,3733	
15b	R=332,8125"	7	222,0489"	2	37,8222	75,6444	
16	5" 16" 20"	4	82"	36	4,5646	164,3256	

TOTAL lb. 2252,7614

*NOTE:
THE RADIUS DIMENSION IN THE TABLE IS TO THE CENTERLINE OF THE BAR.

FILE NAME	IP_PWP:dms69908\46055-Txx-14TS039.DLV				
TIME	19-OCT-2010 15:53				
DATE	19-OCT-2010				
PLOTTED BY	groe				
DESIGNED BY	C. CALVO				
ENTERED BY	C. CALVO				
CHECKED BY	S. TREYGER				
PROJ. ENGR.	S. EVERETT				
REGIONAL ADM.	R. PAANANEN	REVISION	DATE	BY	

REGION NO.	STATE	FED.AID PROJ.NO.
10	WASH	
JOB NUMBER		
CONTRACT NO.		LOCATION NO.

SEAMON TREYGER — STATE OF WASHINGTON — 20868 — SUBSTRUCTURAL ENGINEER — PROFESSIONAL ENGINEER

RFP DESIGN
SUBMITTED BY
SEATTLE TUNNEL PARTNERS

NOT FOR CONSTRUCTION

Washington State Department of Transportation
U.S. Department of Transportation Federal Highway Administration
City of Seattle

ALASKAN WAY VIADUCT
REPLACEMENT PROJECT
SR 99 BORED TUNNEL
CONTRACT PACKAGE 14

SEGMENT
A1 REINFOREMENT

TS039

SHEET 114 OF 208 SHEETS

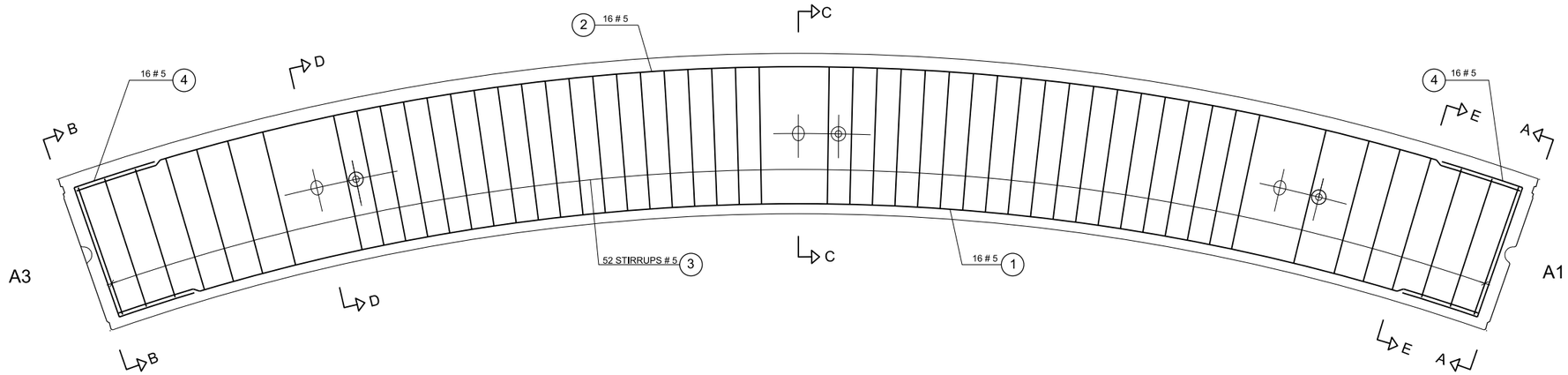

SEGMENT VIEW - A2
(FROM THE SHIELD) Z=0
SCALE A-1= 1/10
A-3= 1/20

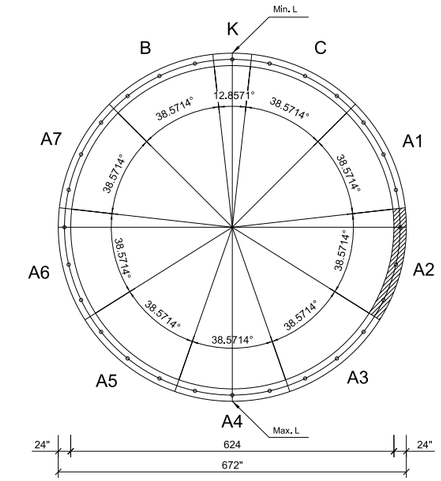

RING DEFINITION
S/E

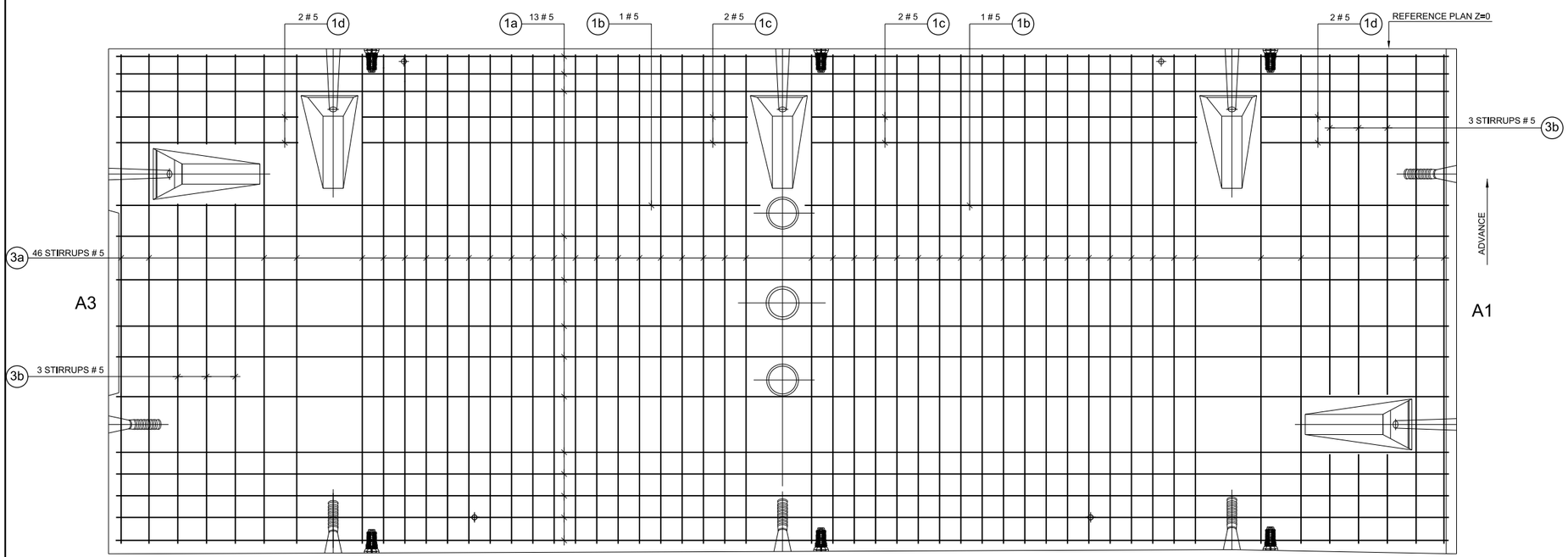

INNER FACE DEVELOPMENT
OF SEGMENT TYPE - A2
SCALE A-1= 1/10
A-3= 1/20

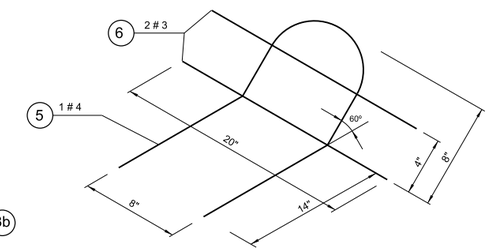

DETAIL OF REINFORCEMENT
IN BOLTS (TIP)

FILE NAME	IP_PWP:dms69908\46055-Txx-14TS040.DLV					
TIME	19-OCT-2010 15:53					
DATE	19-OCT-2010					
PLOTTED BY	groe					
DESIGNED BY	C. CALVO					
ENTERED BY	C. CALVO					
CHECKED BY	S. TREYGER					
PROJ. ENGR.	S. EVERETT					
REGIONAL ADM.	R. PAANANEN	REVISION	DATE	BY		

REGION NO.	STATE	FED.AID PROJ.NO.
10	WASH	
JOB NUMBER		
CONTRACT NO.		LOCATION NO.

SEMYON TREYGER · STATE OF WASHINGTON · 20868 · STRUCTURAL ENGINEER · PROFESSIONAL ENGINEER

RFP DESIGN
SUBMITTED BY
SEATTLE TUNNEL PARTNERS

NOT FOR CONSTRUCTION

Washington State Department of Transportation
U.S. Department of Transportation Federal Highway Administration
City of Seattle

ALASKAN WAY VIADUCT
REPLACEMENT PROJECT
SR 99 BORED TUNNEL
CONTRACT PACKAGE 14

SEGMENT
A2 REINFOREMENT

TS040

SHEET 115 OF 208 SHEETS

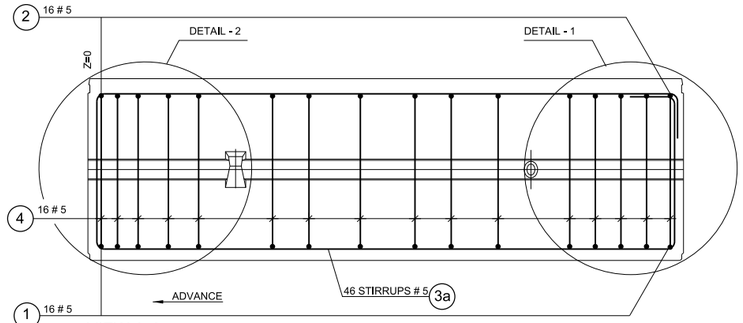

VIEW A-A
SCALE A-1= 1/10
A-3= 1/20

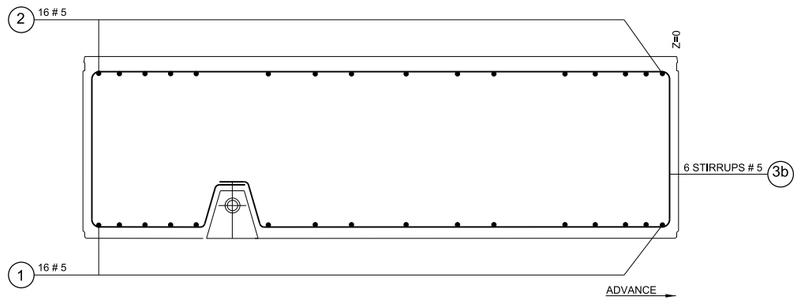

VIEW E-E
SCALE A-1= 1/10
A-3= 1/20

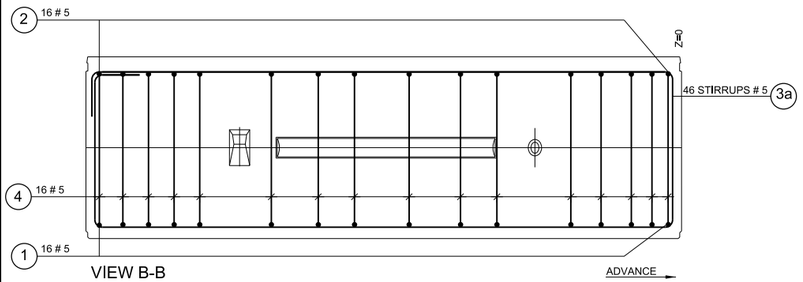

VIEW B-B
SCALE A-1= 1/10
A-3= 1/20

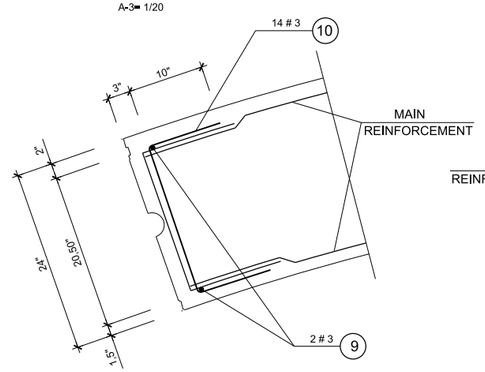

RADIAL JOINT REINFORCEMENT (SPALLING)
SCALE A-1= 1/10
A-3= 1/20

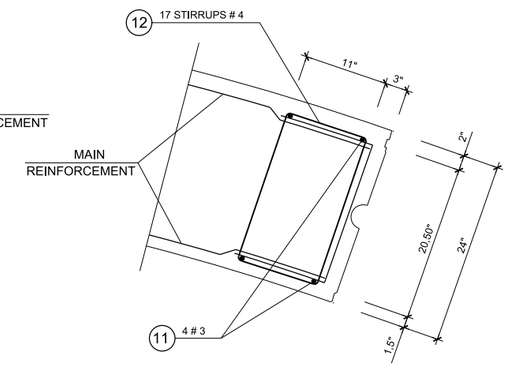

RADIAL JOINT REINFORCEMENT (BURSTING)
SCALE A-1= 1/10
A-3= 1/20

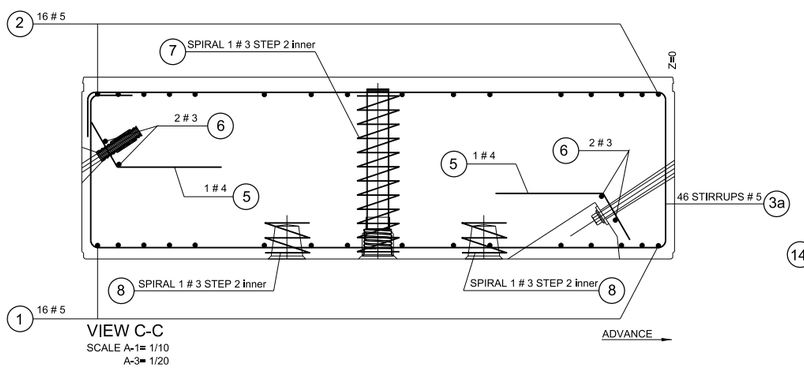

VIEW C-C
SCALE A-1= 1/10
A-3= 1/20

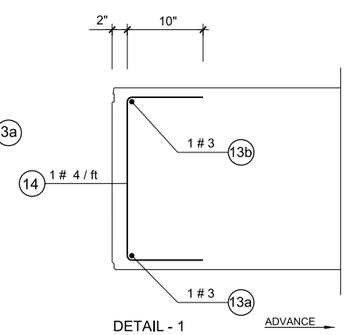

DETAIL - 1
SCALE A-1= 1/10
A-3= 1/20

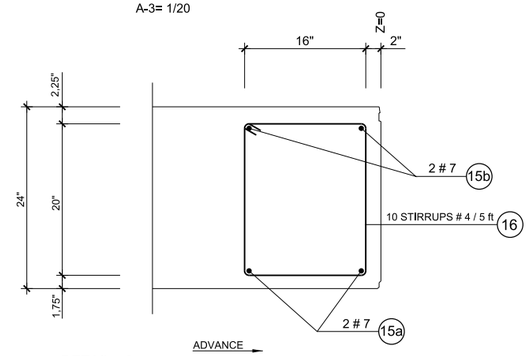

DETAIL - 2
SCALE A-1= 1/10
A-3= 1/20

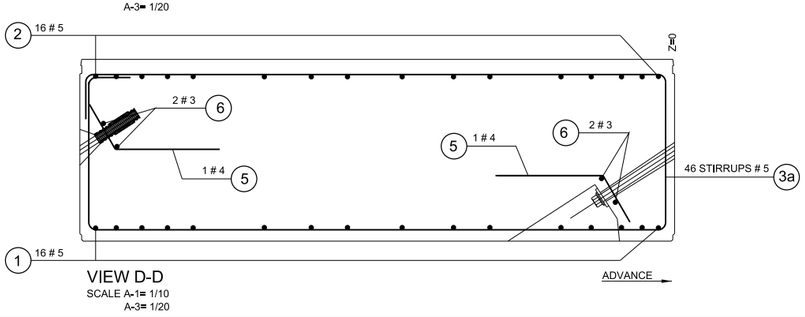

VIEW D-D
SCALE A-1= 1/10
A-3= 1/20

BREAK UP OF REINFORCEMENT IN SEGMENT A2

ITEM	SKETCH	# DIAMETER OF IN.	LENGHT IN INCHES	NUMBER OF BARS	WEIGHT lb PER UT.	WEIGHT lb TOT. lb	
1a	R=314,4375"	5	208,6786"	13	18,1376	235,7888	1
1b	R=314,4375"	5	100,3426"	2	8,7214"	17,4428	
1c	R=314,4375"	5	60"	4	5,215	20,8600	
1d	R=314,4375"	5	28,3909"	4	2,4676	9,8704	
2	R=333,0625"	5	221,2169"	16	19,2274	307,6384	
3a	6" 6" 75,3571" 20,5"	5	203,7142"	46	17,7061	814,4806	
3b	75,3571" 6" 12,6" 6" 20,5"	5	209,9205"	6	18,2455	109,473	2
4	12" 18,625" 12"	5	42,625"	32	3,7048	118,5536	
5		4	48,5663"	10	2,7035	27,0350	
6	20"	3	20"	20	0,6266	12,5320	
7	STEP=2in. RADIO= 3in.	3	226,1947"	1	7,0874	7,0874	
8	STEP=2in. RADIO= 3in.	3	56,5487"	2	1,7718	3,5436	
9	75,3571	3	75,3571"	4	2,3611	9,4444	3
10	10" 20,5" 10"	3	40,50"	28	1,2676	35,4942	
11	75,3571	3	75,3571"	8	2,3611	18,8888	
12	5" 20,5" 11"	4	73"	34	4,0636	138,16	
13a	R=313,6875"	3	209,1739	1	6,5541	6,5541	
13b	R=334,3125"	3	223,0586"	1	6,9892	6,9892	4
14	10" 21,5" 10"	4	41,5"	18	2,3101	41,5818	
15a	R=314,6875"	7	209,8471"	2	35,6866	71,3733	
15b	R=332,8125"	7	222,0489"	2	37,8222	75,6444	
16	5" 20" 16"	4	82"	36	4,5646	164,3256	

TOTAL lb. 2252,7614

*NOTE:
THE RADIUS DIMENSION IN THE TABLE IS TO THE CENTERLINE OF THE BAR.

FILE NAME	IP_PWP:dms69908\46055-Txx-14TS041.DLV
TIME	19-OCT-2010 15:54
DATE	19-OCT-2010
PLOTTED BY	groe
DESIGNED BY	C. CALVO
ENTERED BY	C. CALVO
CHECKED BY	S. TREYGER
PROJ. ENGR.	S. EVERETT
REGIONAL ADM.	R. PAANANEN

REVISION | DATE | BY

REGION NO. 10 | STATE WASH | FED.AID PROJ.NO.
JOB NUMBER
CONTRACT NO. | LOCATION NO.

SEAMYON TREYGER STATE OF WASHINGTON 20868 STRUCTURAL ENGINEER PROFESSIONAL ENGINEER

RFP DESIGN
SUBMITTED BY
SEATTLE TUNNEL PARTNERS
NOT FOR CONSTRUCTION

Washington State Department of Transportation
U.S. Department of Transportation Federal Highway Administration
City of Seattle

ALASKAN WAY VIADUCT
REPLACEMENT PROJECT
SR 99 BORED TUNNEL
CONTRACT PACKAGE 14

SEGMENT
A2 REINFOREMENT

TS041

SHEET 116 OF 208 SHEETS

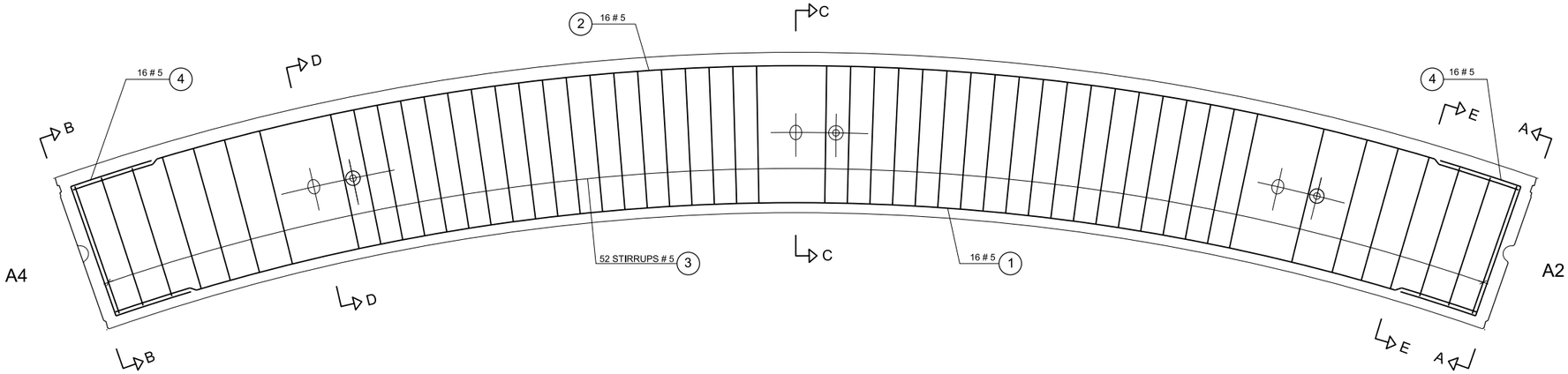

SEGMENT VIEW - A3
(FROM THE SHIELD) Z=0
SCALE A-1= 1/10
A-3= 1/20

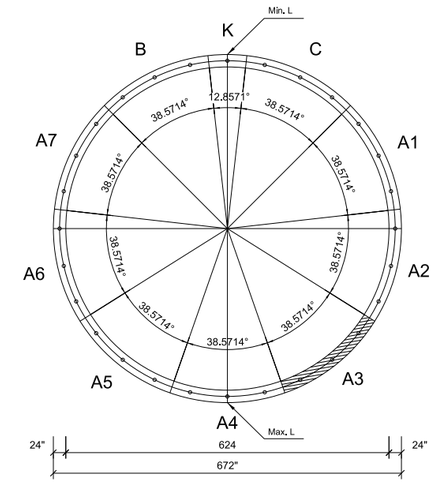

RING DEFINITION
S/E

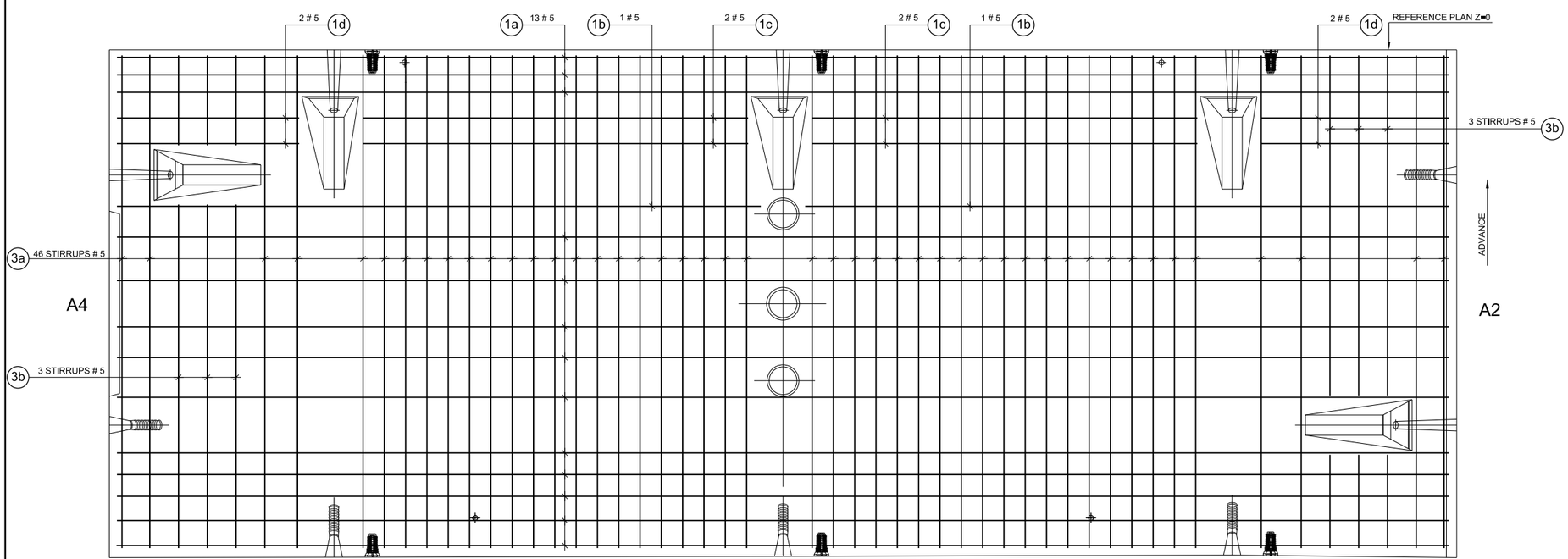

INNER FACE DEVELOPMENT
OF SEGMENT TYPE - A3
SCALE A-1= 1/10
A-3= 1/20

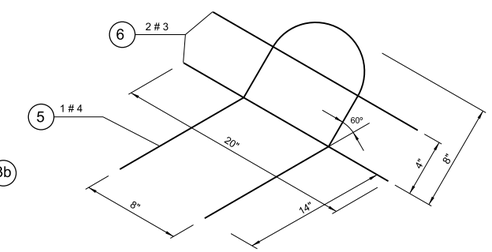

DETAIL OF REINFORCEMENT
IN BOLTS (TIP)

FILE NAME	IP_PWP:dms69908\46055-Txx-14TS042.DLV				REGION NO.	STATE	FED.AID PROJ.NO.
TIME	19-OCT-2010 15:54				10	WASH	
DATE	19-OCT-2010				JOB NUMBER		
PLOTTED BY	groe						
DESIGNED BY	C. CALVO				CONTRACT NO.		LOCATION NO.
ENTERED BY	C. CALVO						
CHECKED BY	S. TREYGER						
PROJ. ENGR.	S. EVERETT						
REGIONAL ADM.	R. PAANANEN	REVISION	DATE	BY			

SEMYON TREYGER — STATE OF WASHINGTON — 20868 — STRUCTURAL ENGINEER — PROFESSIONAL ENGINEER

RFP DESIGN
SUBMITTED BY
SEATTLE TUNNEL PARTNERS

NOT FOR CONSTRUCTION

Washington State Department of Transportation
U.S. Department of Transportation Federal Highway Administration
City of Seattle

ALASKAN WAY VIADUCT
REPLACEMENT PROJECT
SR 99 BORED TUNNEL
CONTRACT PACKAGE 14

SEGMENT
A3 REINFOREMENT

TS042

SHEET 117 OF 208 SHEETS

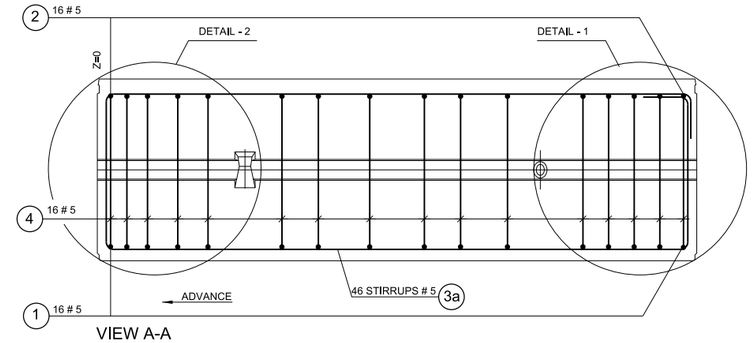

VIEW A-A
SCALE A-1= 1/10
A-3= 1/20

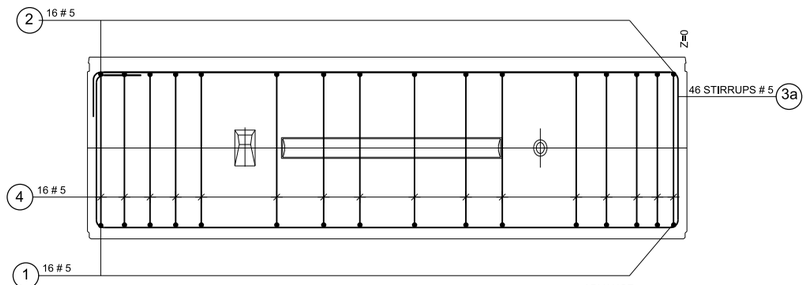

VIEW B-B
SCALE A-1= 1/10
A-3= 1/20

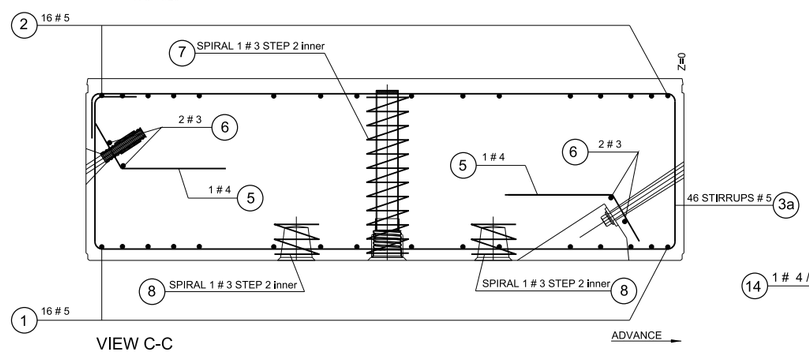

VIEW C-C
SCALE A-1= 1/10
A-3= 1/20

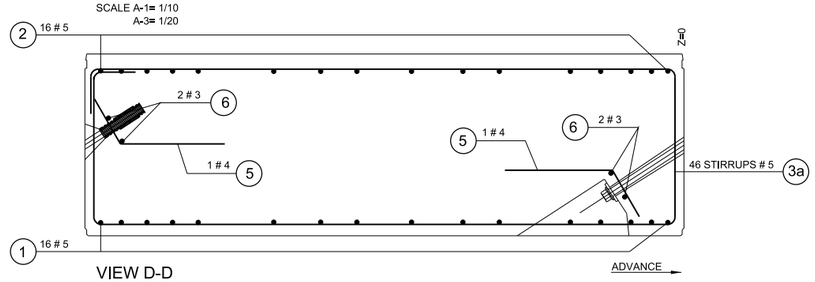

VIEW D-D
SCALE A-1= 1/10
A-3= 1/20

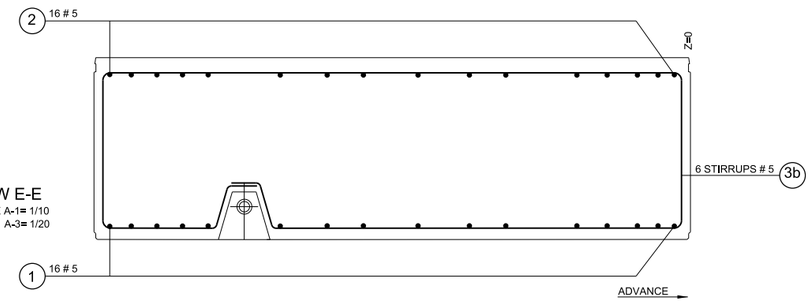

VIEW E-E
SCALE A-1= 1/10
A-3= 1/20

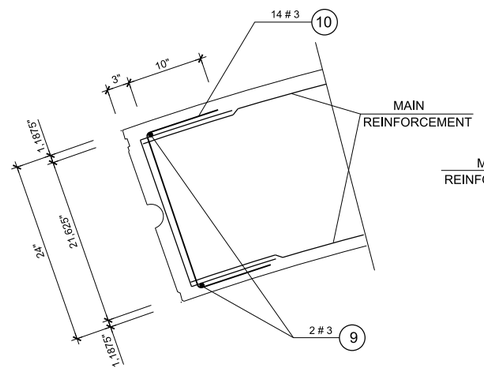

RADIAL JOINT REINFORCEMENT (SPALLING)
SCALE A-1= 1/10
A-3= 1/20

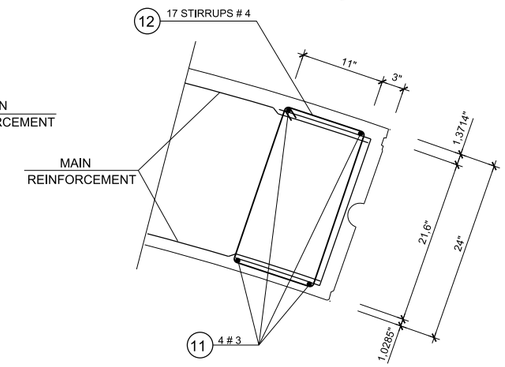

RADIAL JOINT REINFORCEMENT (BURSTING)
SCALE A-1= 1/10
A-3= 1/20

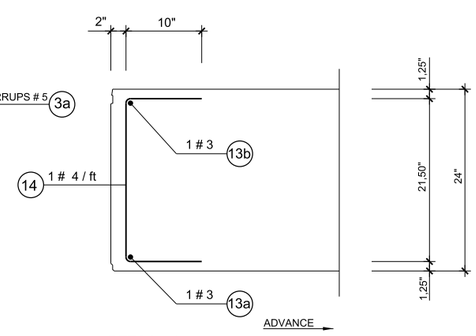

DETAIL - 1
SCALE A-1= 1/10
A-3= 1/20

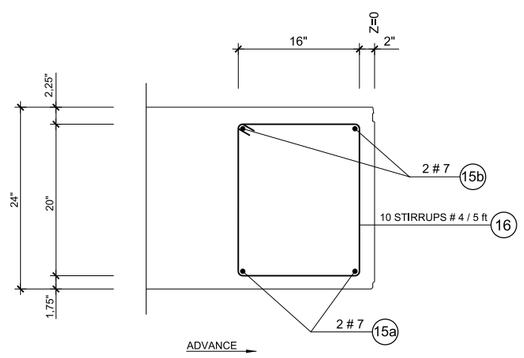

DETAIL - 2
SCALE A-1= 1/10
A-3= 1/20

BREAK UP OF REINFORCEMENT IN SEGMENT A3

ITEM	SKETCH	# DIAMETER OF IN.	LENGHT EN INCHES	NUMBER OF BARS	WEIGHT f/t POR UD.	WEIGHT f/t TOT. f/t	
1a	R=314,4375"	5	208,6786"	13	18,1376	235,7888	1
1b	R=314,4375"	5	100,3426"	2	8,7214"	17,4428	
1c	R=314,4375"	5	60"	4	5,215	20,8600	
1d	R=314,4375"	5	28,3909"	4	2,4676	9,8704	
2	R=333,0625"	5	221,2169"	16	19,2274	307,6384	
3a	6" 6" 75,3571" 20,5"	5	203,7142"	46	17,7061	814,4806	
3b	75,3571" 12,6" 6" 6" 20,5"	5	209,9205"	6	18,2455	109,473	2
4	18,625" 12" 12"	5	42,625"	32	3,7048	118,5536	
5		4	48,5663"	10	2,7035	27,0350	
6	20"	3	20"	20	0,6266	12,5320	
7	STEP=2in. RADIO= 3in.	3	226,1947"	1	7,0874	7,0874	
8	STEP=2in. RADIO= 3in.	3	56,5487"	2	1,7718	3,5436	
9	75,3571	3	75,3571"	4	2,3611	9,4444	3
10	21,625" 10" 10"	3	41,625"	28	1,3042	36,5176	
11	75,3571	3	75,3571"	8	2,3611	18,8888	
12	5" 21,6" 11"	4	75,2"	34	4,1861	142,3274	
13a	R=313,6875"	3	209,1739	1	6,5541	6,5541	
13b	R=334,3125"	3	223,0586"	1	6,9892	6,9892	4
14	21,5" 10" 10"	4	41,5"	18	2,3101	41,5818	
15a	R=314,6875"	7	209,8471"	2	35,6866	71,3733	
15b	R=332,8125"	7	222,0489"	2	37,8222	75,6444	
16	5" 20" 16"	4	82"	36	4,5646	164,3256	

TOTAL f/t. 2257,9522

5

FILE NAME	IP_PWP:dms69908\46055-Txx-14TS043.DLV					
TIME	19-OCT-2010 15:54					
DATE	19-OCT-2010					
PLOTTED BY	groe					
DESIGNED BY	C. CALVO					
ENTERED BY	C. CALVO					
CHECKED BY	S. TREYGER					
PROJ. ENGR.	S. EVERETT					
REGIONAL ADM.	R. PAANANEN	REVISION	DATE	BY		

REGION NO. 10 | STATE WASH | FED.AID PROJ.NO.
JOB NUMBER
CONTRACT NO. | LOCATION NO.

SEAMYON TREYGER STATE OF WASHINGTON 20868 STRUCTURAL ENGINEER PROFESSIONAL ENGINEER

RFP DESIGN
SUBMITTED BY
SEATTLE TUNNEL PARTNERS

NOT FOR CONSTRUCTION

Washington State Department of Transportation
U.S. Department of Transportation Federal Highway Administration
City of Seattle

ALASKAN WAY VIADUCT
REPLACEMENT PROJECT
SR 99 BORED TUNNEL
CONTRACT PACKAGE 14

SEGMENT
A3 REINFOREMENT

TS043

SHEET 118 OF 208 SHEETS

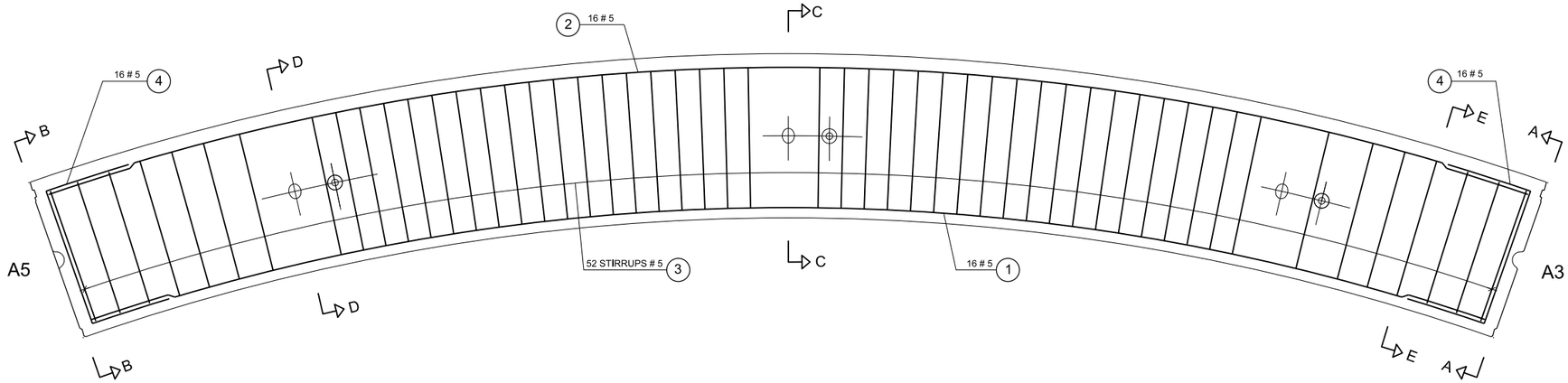

SEGMENT VIEW - A4
(FROM THE SHIELD) Z=0
SCALE A-1= 1/10
A-3= 1/20

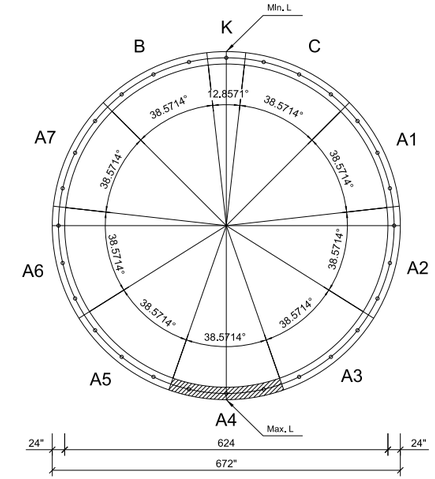

RING DEFINITION
S/E

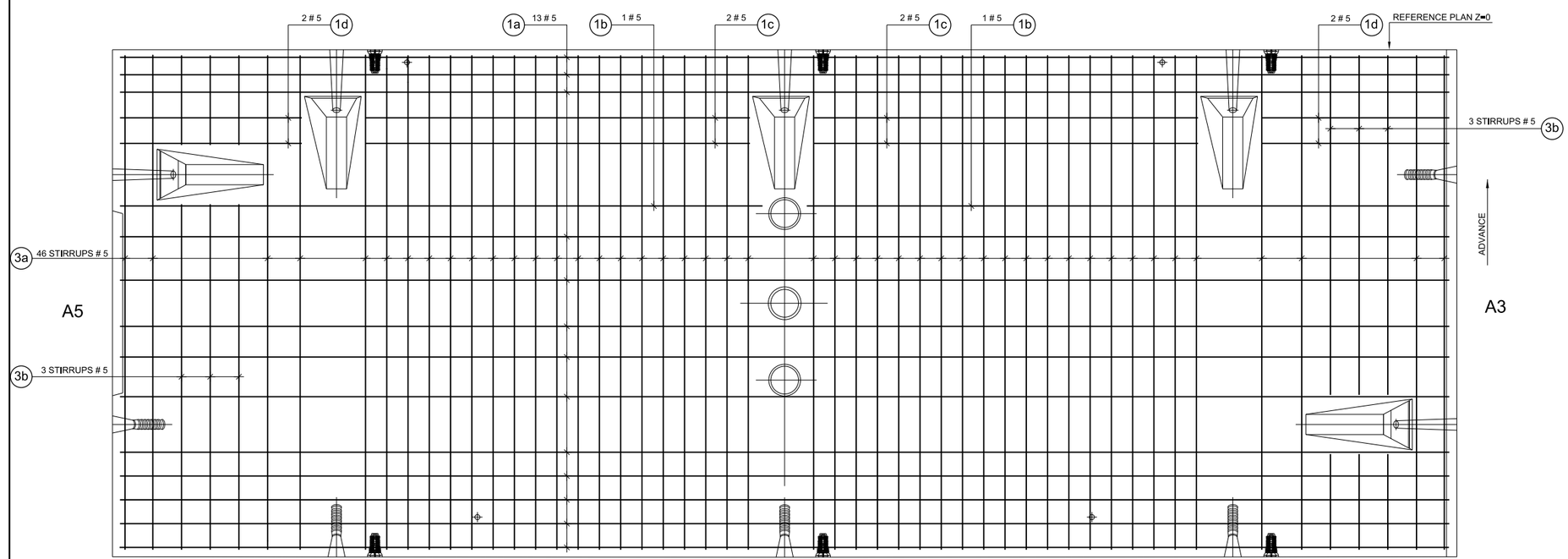

INNER FACE DEVELOPMENT
OF SEGMENT TYPE - A4
SCALE A-1= 1/10
A-3= 1/20

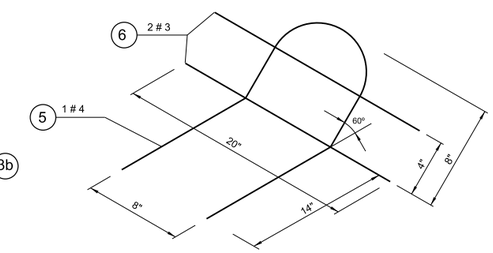

DETAIL OF REINFORCEMENT
IN BOLTS (TIP)

FILE NAME	IP_PWP:dms69908\46055-Txx-14TS044.DLV				REGION NO.	STATE	FED.AID PROJ.NO.
TIME	19-OCT-2010 15:55				10	WASH	
DATE	19-OCT-2010				JOB NUMBER		
PLOTTED BY	groe						
DESIGNED BY	C. CALVO				CONTRACT NO.		LOCATION NO.
ENTERED BY	C. CALVO						
CHECKED BY	S. TREYGER						
PROJ. ENGR.	S. EVERETT						
REGIONAL ADM.	R. PAANANEN	REVISION	DATE	BY			

SEMYON TREYGER STATE OF WASHINGTON 20868 STRUCTURAL ENGINEER PROFESSIONAL ENGINEER

RFP DESIGN
SUBMITTED BY
SEATTLE TUNNEL PARTNERS

NOT FOR CONSTRUCTION

Washington State Department of Transportation
U.S. Department of Transportation Federal Highway Administration
City of Seattle

ALASKAN WAY VIADUCT
REPLACEMENT PROJECT
SR 99 BORED TUNNEL
CONTRACT PACKAGE 14

SEGMENT
A4 REINFOREMENT

TS044

SHEET 119 OF 208 SHEETS

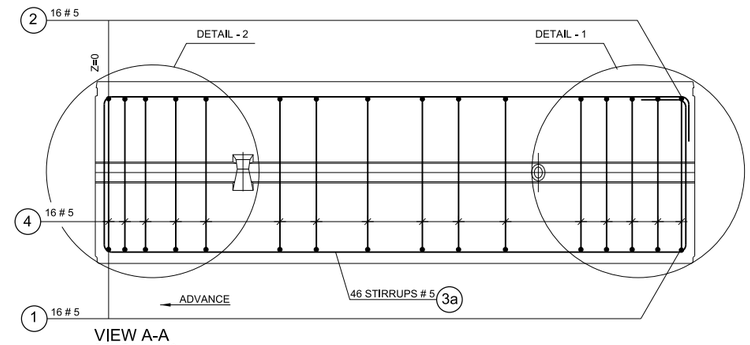

VIEW A-A
SCALE A-1= 1/10
A-3= 1/20

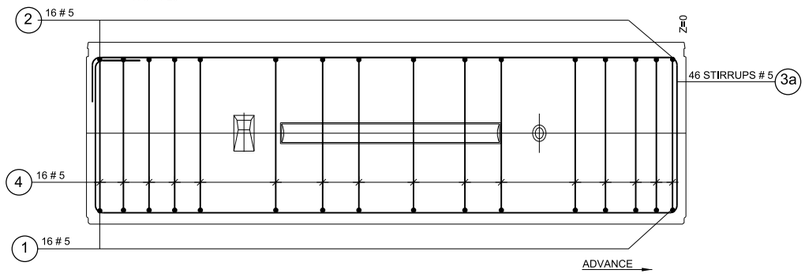

VIEW B-B
SCALE A-1= 1/10
A-3= 1/20

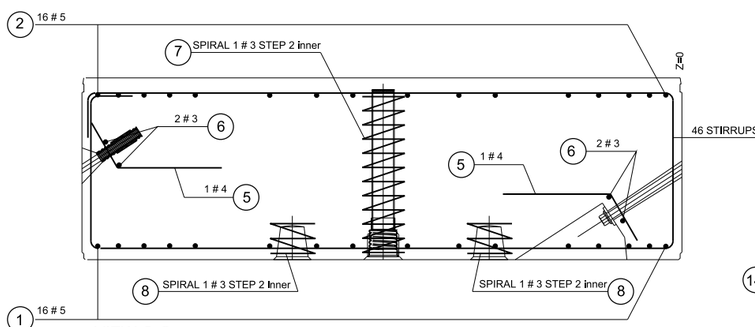

VIEW C-C
SCALE A-1= 1/10
A-3= 1/20

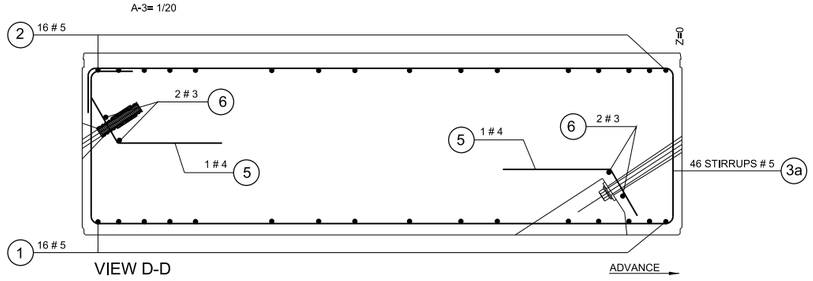

VIEW D-D
SCALE A-1= 1/10
A-3= 1/20

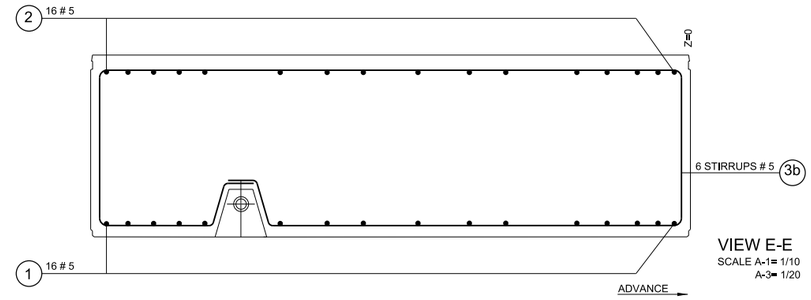

VIEW E-E
SCALE A-1= 1/10
A-3= 1/20

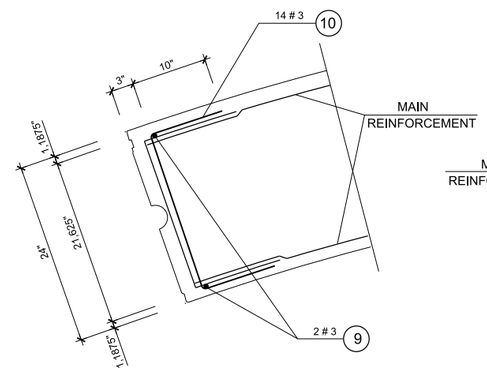

RADIAL JOINT REINFORCEMENT (SPALLING)
SCALE A-1= 1/10
A-3= 1/20

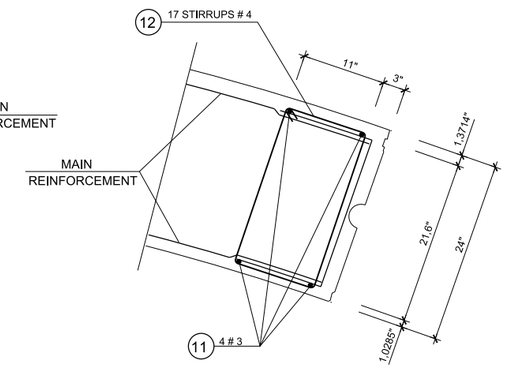

RADIAL JOINT REINFORCEMENT (BURSTING)
SCALE A-1= 1/10
A-3= 1/20

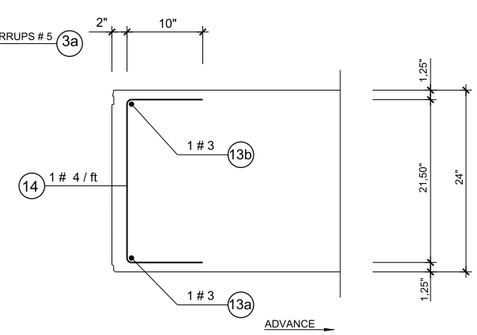

DETAIL - 1
SCALE A-1= 1/10
A-3= 1/20

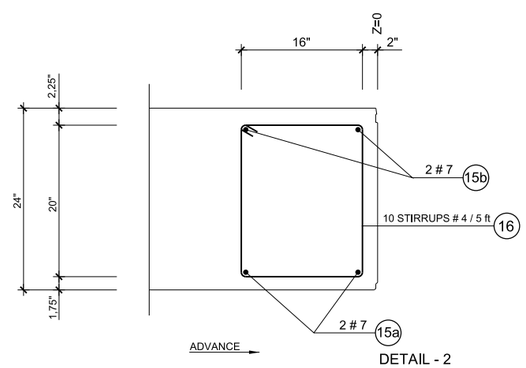

DETAIL - 2
SCALE A-1= 1/10
A-3= 1/20

BREAK UP OF REINFORCEMENT IN SEGMENT A4

ITEM	SKETCH	# DIAMETER OF IN.	LENGHT EN INCHES	NUMBER OF BARS	WEIGHT f/t POR UD.	WEIGHT f/t TOT. f/t	
1a	R=314,4375"	5	208,6786"	13	18,1376	235,7888	1
1b	R=314,4375"	5	100,3426"	2	8,7214"	17,4428	
1c	R=314,4375"	5	60"	4	5,215	20,8600	
1d	R=314,4375"	5	28,3909"	4	2,4676	9,8704	
2	R=333,0625"	5	221,2169"	16	19,2274	307,6384	
3a	6" 6" 75,3571" 20,5"	5	203,7142"	46	17,7061	814,4806	
3b	75,3571" 12,6" 6" 6" 20,5"	5	209,9205"	6	18,2455	109,473	2
4	18,625" 12" 12"	5	42,625"	32	3,7048	118,5536	
5		4	48,5663"	10	2,7035	27,0350	
6	20"	3	20"	20	0,6266	12,5320	
7	STEP=2in. RADIO= 3in.	3	226,1947"	1	7,0874	7,0874	
8	STEP=2in. RADIO= 3in.	3	56,5487"	2	1,7718	3,5436	
9	75,3571	3	75,3571"	4	2,3611	9,4444	3
10	21,625" 10" 10"	3	41,625"	28	1,3042	36,5176	
11	75,3571	3	75,3571"	8	2,3611	18,8888	
12	5" 21,6" 11"	4	75,2"	34	4,1861	142,3274	
13a	R=313,6875"	3	209,1739	1	6,5541	6,5541	
13b	R=334,3125"	3	223,0586"	1	6,9892	6,9892	4
14	21,5" 10" 10"	4	41,5"	18	2,3101	41,5818	
15a	R=314,6875"	7	209,8471"	2	35,6866	71,3733	
15b	R=332,8125"	7	222,0489"	2	37,8222	75,6444	
16	5" 20" 16"	4	82"	36	4,5646	164,3256	

TOTAL f/t. 2257,9522

5

FILE NAME	IP_PWP:dms69908\46055-Txx-14TS045.DLV					
TIME	19-OCT-2010 15:55					
DATE	19-OCT-2010					
PLOTTED BY	groe					
DESIGNED BY	C. CALVO					
ENTERED BY	C. CALVO					
CHECKED BY	S. TREYGER					
PROJ. ENGR.	S. EVERETT					
REGIONAL ADM.	R. PAANANEN	REVISION	DATE	BY		

REGION NO.	STATE	FED.AID PROJ.NO.
10	WASH	
JOB NUMBER		
CONTRACT NO.		LOCATION NO.

SEAMON TREYGER STATE OF WASHINGTON 20868 STRUCTURAL ENGINEER PROFESSIONAL ENGINEER

RFP DESIGN
SUBMITTED BY
SEATTLE TUNNEL PARTNERS

NOT FOR CONSTRUCTION

Washington State Department of Transportation
U.S. Department of Transportation Federal Highway Administration
City of Seattle

ALASKAN WAY VIADUCT
REPLACEMENT PROJECT
SR 99 BORED TUNNEL
CONTRACT PACKAGE 14

SEGMENT
A4 REINFOREMENT

TS045

SHEET 120 OF 208 SHEETS

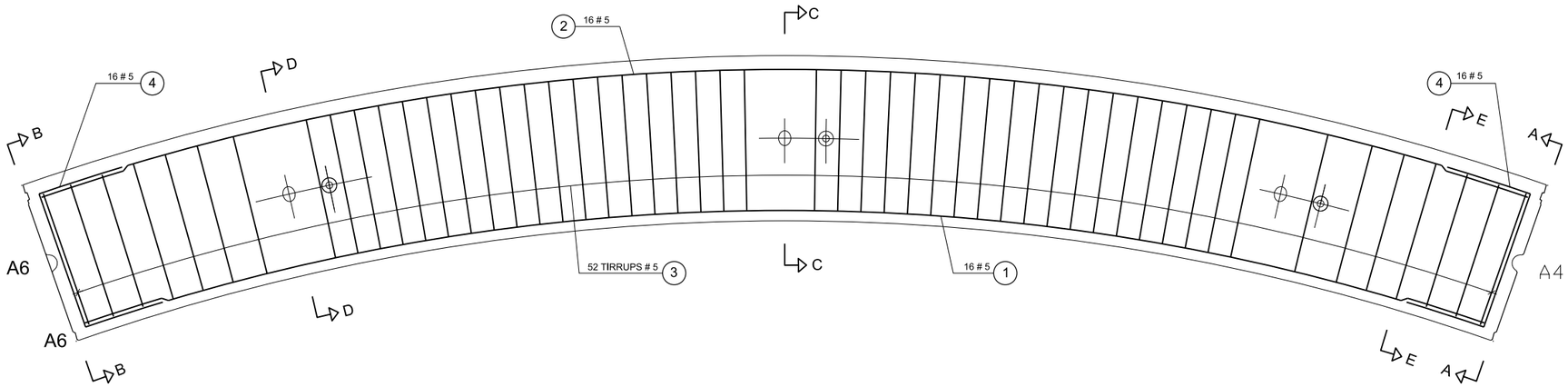

SEGMENT VIEW - A5
(FROM THE SHIELD) Z=0
SCALE A-1= 1/10
A-3= 1/20

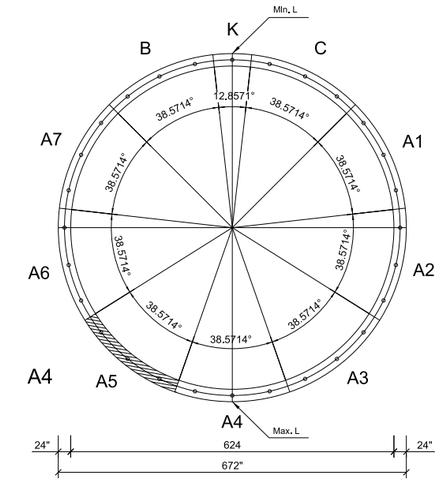

RING DEFINITION
S/E

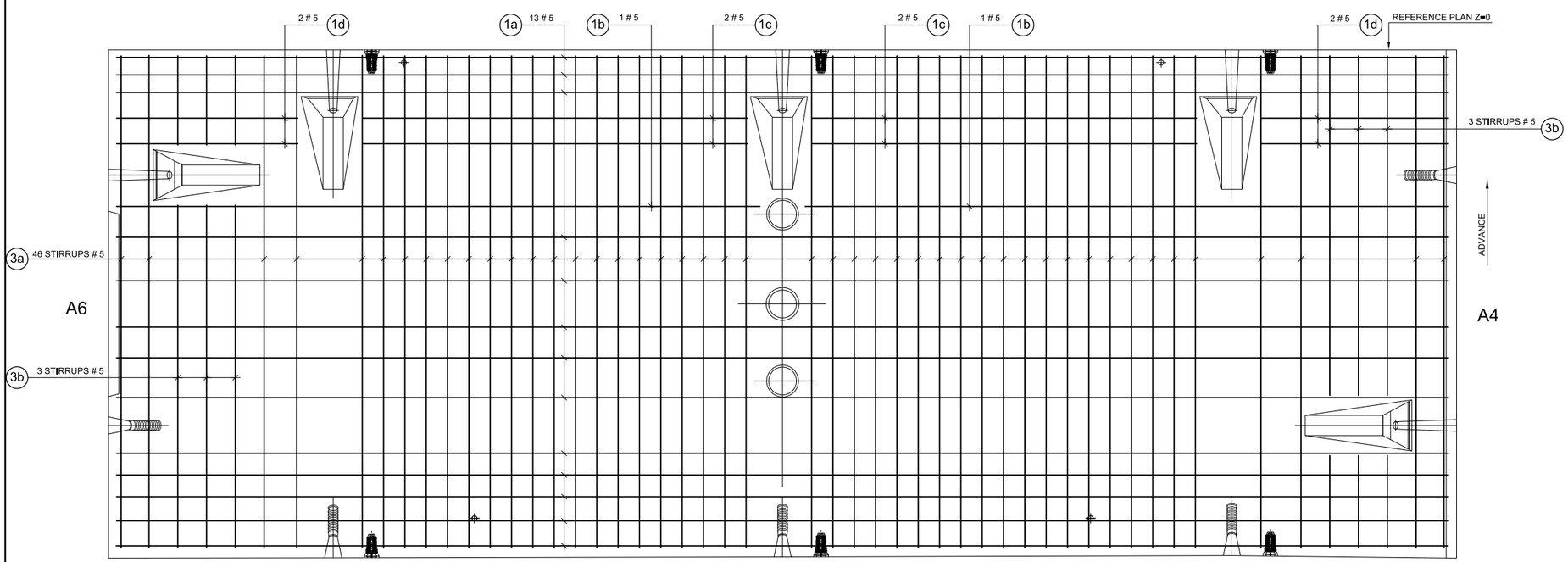

INNER FACE DEVELOPMENT
OF SEGMENT TYPE - A5
SCALE A-1= 1/10
A-3= 1/20

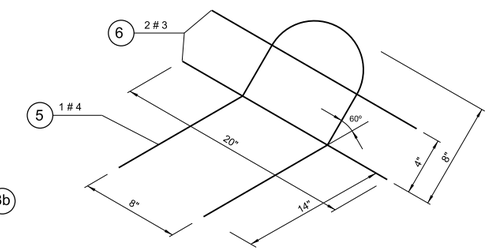

DETAIL OF REINFORCEMENT
IN BOLTS (TIP)

FILE NAME	IP_PWP:dms69908\46055-Txx-14TS046.DLV						
TIME	19-OCT-2010 15:55				REGION NO. 10	STATE WASH	FED.AID PROJ.NO.
DATE	19-OCT-2010						
PLOTTED BY	groe				JOB NUMBER		
DESIGNED BY	C. CALVO						
ENTERED BY	C. CALVO						
CHECKED BY	S. TREYGER				CONTRACT NO.		LOCATION NO.
PROJ. ENGR.	S. EVERETT						
REGIONAL ADM.	R. PAANANEN	REVISION	DATE	BY			

SEMYON TREYGER · STATE OF WASHINGTON · 20868 · STRUCTURAL ENGINEER · PROFESSIONAL ENGINEER

RFP DESIGN
SUBMITTED BY
SEATTLE TUNNEL PARTNERS

NOT FOR CONSTRUCTION

Washington State Department of Transportation
U.S. Department of Transportation Federal Highway Administration
City of Seattle

ALASKAN WAY VIADUCT
REPLACEMENT PROJECT
SR 99 BORED TUNNEL
CONTRACT PACKAGE 14

SEGMENT
A5 REINFOREMENT

TS046

SHEET 121 OF 208 SHEETS

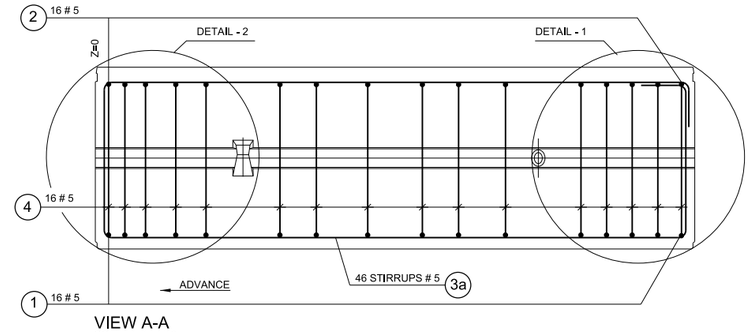

VIEW A-A
SCALE A-1= 1/10
A-3= 1/20

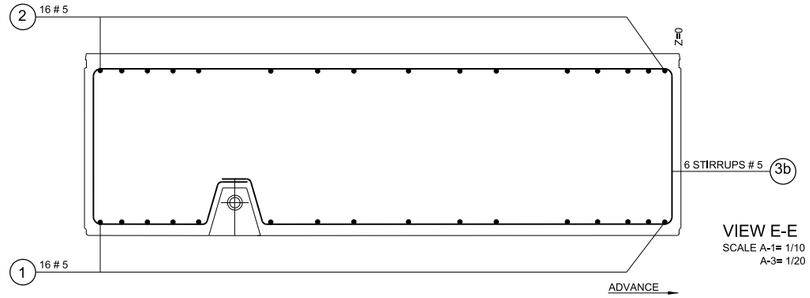

VIEW E-E
SCALE A-1= 1/10
A-3= 1/20

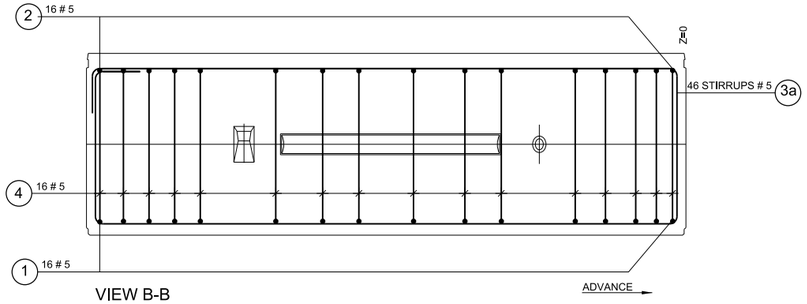

VIEW B-B
SCALE A-1= 1/10
A-3= 1/20

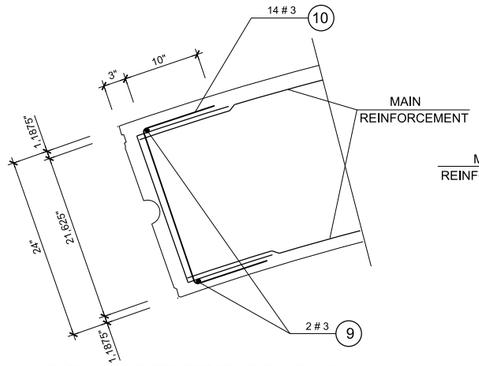

RADIAL JOINT REINFORCEMENT (SPALLING)
SCALE A-1= 1/10
A-3= 1/20

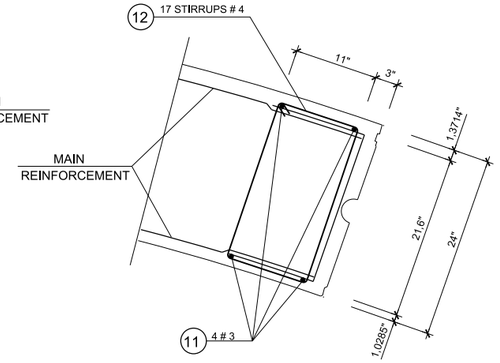

RADIAL JOINT REINFORCEMENT (BURSTING)
SCALE A-1= 1/10
A-3= 1/20

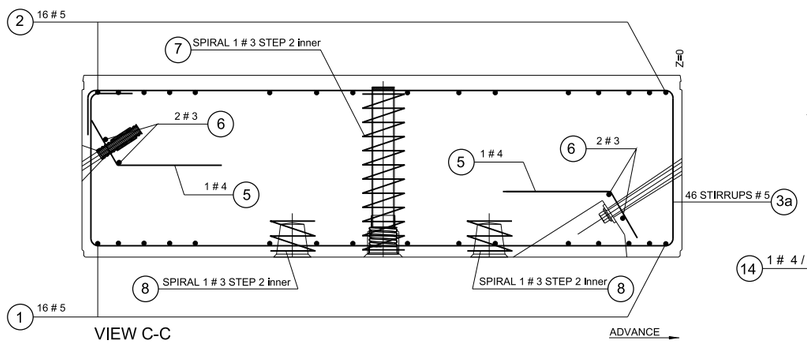

VIEW C-C
SCALE A-1= 1/10
A-3= 1/20

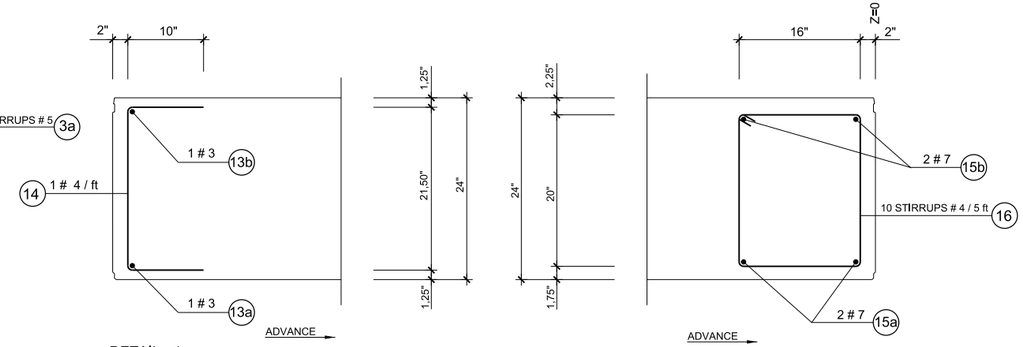

DETAIL - 1
SCALE A-1= 1/10
A-3= 1/20

DETAIL - 2
SCALE A-1= 1/10
A-3= 1/20

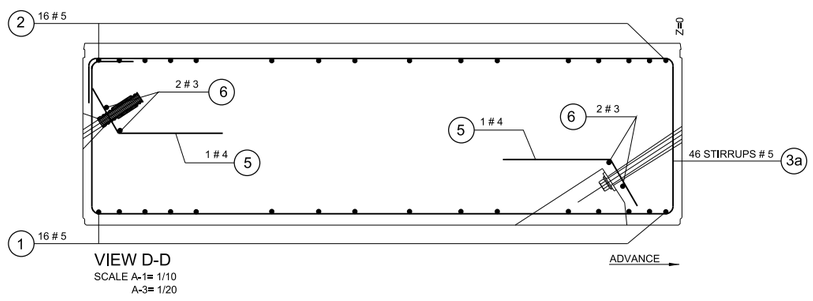

VIEW D-D
SCALE A-1= 1/10
A-3= 1/20

BREAK UP OF REINFORCEMENT IN SEGMENT A5

ITEM	SKETCH	# DIAMETER OF IN.	LENGHT EN INCHES	NUMBER OF BARS	WEIGHT f/t POR UD.	WEIGHT f/t TOT. f/t	
1a	R=314,4375"	5	208,6786"	13	18,1376	235,7888	1
1b	R=314,4375"	5	100,3426"	2	8,7214"	17,4428	
1c	R=314,4375"	5	60"	4	5,215	20,8600	
1d	R=314,4375"	5	28,3909"	4	2,4676	9,8704	
2	R=333,0625"	5	221,2169"	16	19,2274	307,6384	
3a	6" 6" 75,3571" 20,5"	5	203,7142"	46	17,7061	814,4806	
3b	75,3571" 6" 12,6" 20,5"	5	209,9205"	6	18,2455	109,473	2
4	12" 18,625" 12"	5	42,625"	32	3,7048	118,5536	
5		4	48,5663"	10	2,7035	27,0350	
6	20"	3	20"	20	0,6266	12,5320	
7	STEP=2in. RADIO= 3in.	3	226,1947"	1	7,0874	7,0874	
8	STEP=2in. RADIO= 3in.	3	56,5487"	2	1,7718	3,5436	
9	75,3571	3	75,3571"	4	2,3611	9,4444	3
10	10" 21,625" 10"	3	41,625"	28	1,3042	36,5176	
11	75,3571	3	75,3571"	8	2,3611	18,8888	
12	5" 11" 21,6"	4	75,2"	34	4,1861	142,3274	
13a	R=313,6875"	3	209,1739	1	6,5541	6,5541	
13b	R=334,3125"	3	223,0586"	1	6,9892	6,9892	
14	10" 21,5" 10"	4	41,5"	18	2,3101	41,5818	4
15a	R=314,6875"	7	209,8471"	2	35,6866	71,3733	
15b	R=332,8125"	7	222,0489"	2	37,8222	75,6444	
16	5" 16" 20"	4	82"	36	4,5646	164,3256	

TOTAL f/t. 2257,9522

5

FILE NAME	IP_PWP:dms69908\46055-Txx-14TS047.DLV					
TIME	19-OCT-2010 15:55					
DATE	19-OCT-2010					
PLOTTED BY	groe					
DESIGNED BY	C. CALVO					
ENTERED BY	C. CALVO					
CHECKED BY	S. TREYGER					
PROJ. ENGR.	S. EVERETT					
REGIONAL ADM.	R. PAANANEN	REVISION	DATE	BY		

REGION NO.	STATE	FED.AID PROJ.NO.
10	WASH	
JOB NUMBER		
CONTRACT NO.		LOCATION NO.

SEMYON TREYGER STATE OF WASHINGTON 20868 STRUCTURAL ENGINEER PROFESSIONAL ENGINEER

RFP DESIGN
SUBMITTED BY
SEATTLE TUNNEL PARTNERS

NOT FOR CONSTRUCTION

Washington State Department of Transportation
U.S. Department of Transportation Federal Highway Administration
City of Seattle

ALASKAN WAY VIADUCT REPLACEMENT PROJECT
SR 99 BORED TUNNEL
CONTRACT PACKAGE 14

SEGMENT A5 REINFOREMENT

TS047

SHEET 122 OF 208 SHEETS

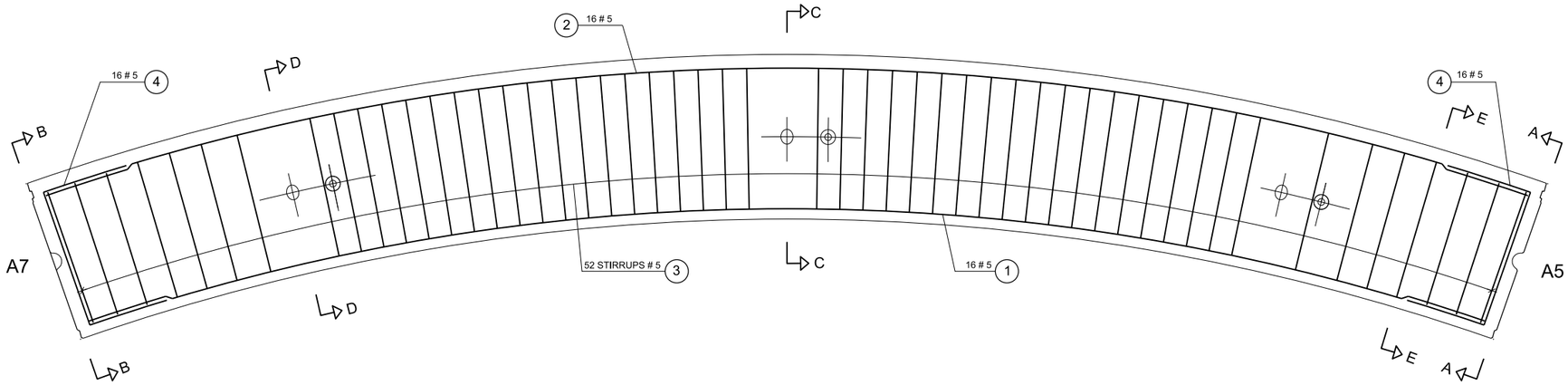

SEGMENT VIEW - A6
(FROM THE SHIELD) Z=0
SCALE A-1= 1/10
A-3= 1/20

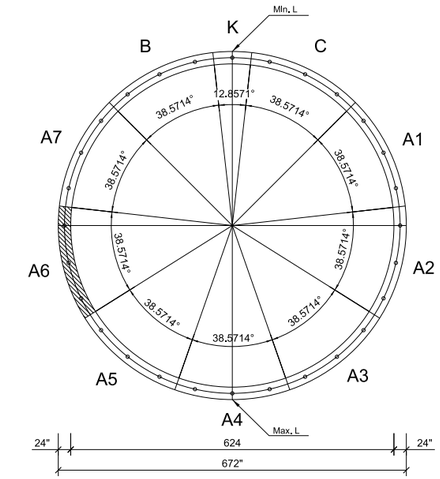

RING DEFINITION
S/E

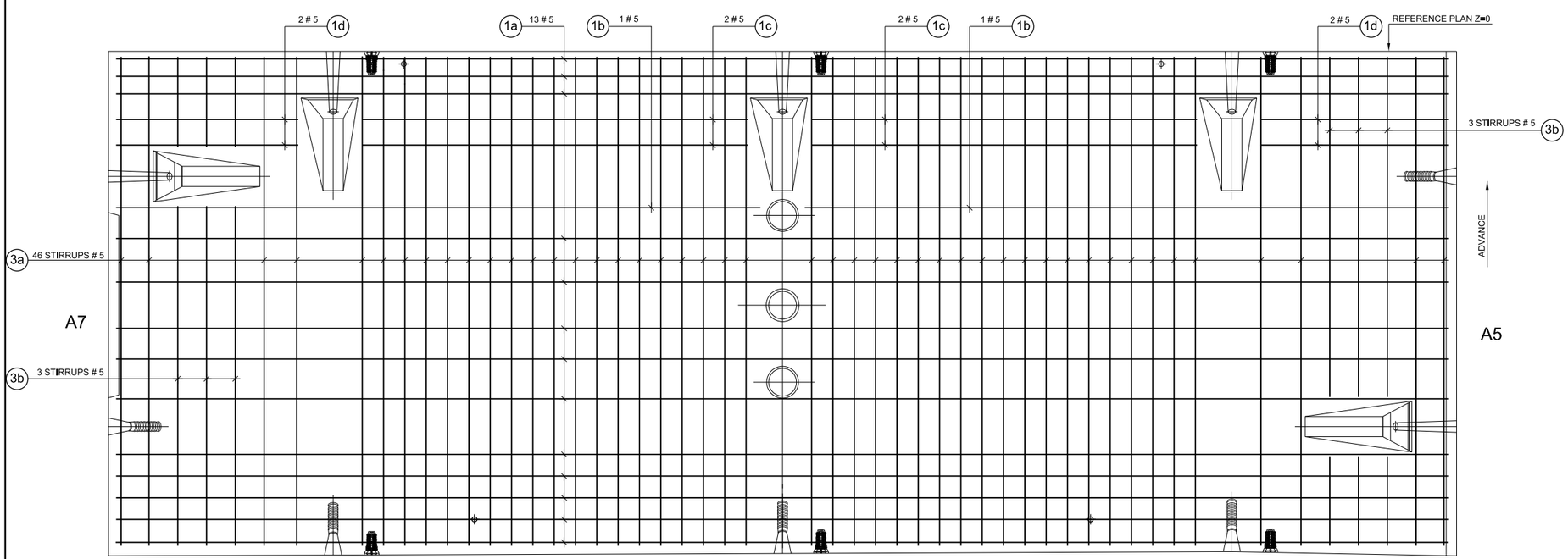

INNER FACE DEVELOPMENT
OF SEGMENT TYPE - A6
SCALE A-1= 1/10
A-3= 1/20

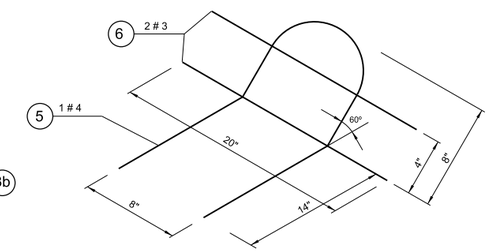

DETAIL OF REINFORCEMENT
IN BOLTS (TIP)

FILE NAME	IP_PWP:dms69908\46055-Txx-14TS048.DLV					
TIME	19-OCT-2010 15:56				REGION NO. 10	STATE WASH
DATE	19-OCT-2010				JOB NUMBER	FED.AID PROJ.NO.
PLOTTED BY	groe					
DESIGNED BY	C. CALVO					
ENTERED BY	C. CALVO					
CHECKED BY	S. TREYGER				CONTRACT NO.	LOCATION NO.
PROJ. ENGR.	S. EVERETT					
REGIONAL ADM.	R. PAANANEN	REVISION	DATE	BY		

SEMYON TREYGER
STATE OF WASHINGTON
20868
STRUCTURAL ENGINEER
PROFESSIONAL ENGINEER

RFP DESIGN
SUBMITTED BY
SEATTLE TUNNEL PARTNERS

NOT FOR CONSTRUCTION

Washington State Department of Transportation
U.S. Department of Transportation Federal Highway Administration
City of Seattle

ALASKAN WAY VIADUCT
REPLACEMENT PROJECT
SR 99 BORED TUNNEL
CONTRACT PACKAGE 14

SEGMENT
A6 REINFOREMENT

TS048

SHEET 123 OF 208 SHEETS

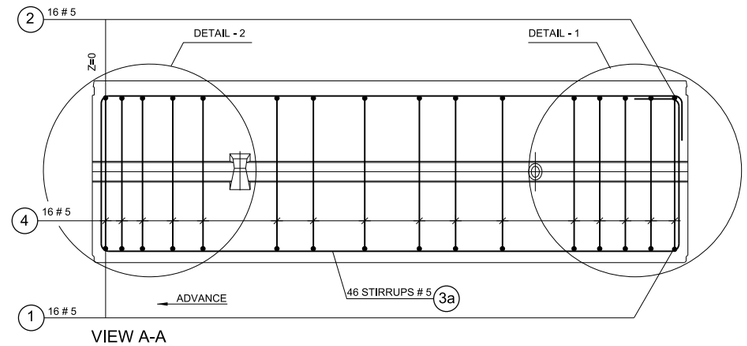

VIEW A-A
SCALE A-1= 1/10
A-3= 1/20

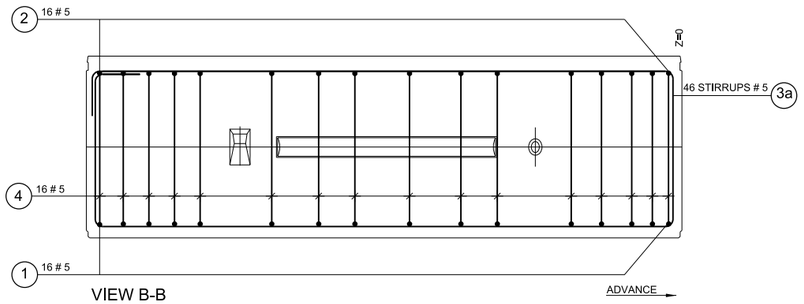

VIEW B-B
SCALE A-1= 1/10
A-3= 1/20

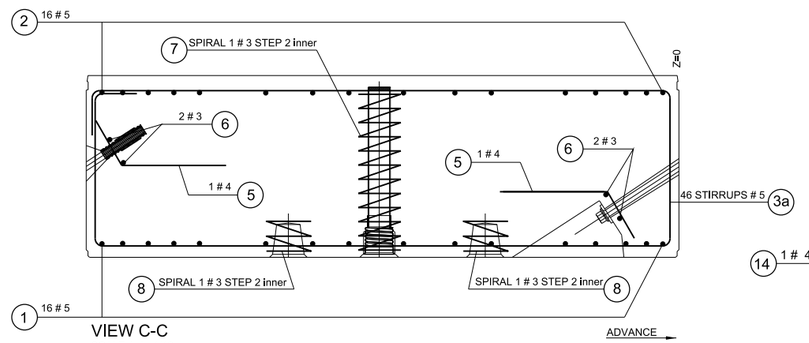

VIEW C-C
SCALE A-1= 1/10
A-3= 1/20

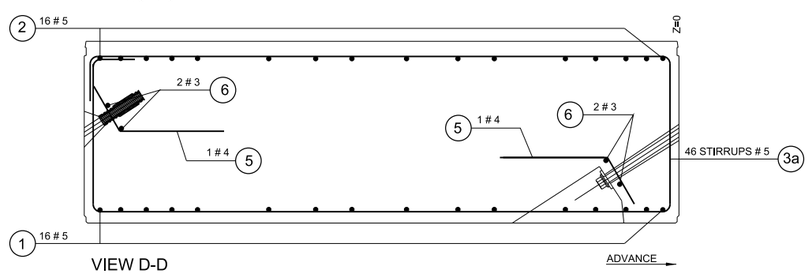

VIEW D-D
SCALE A-1= 1/10
A-3= 1/20

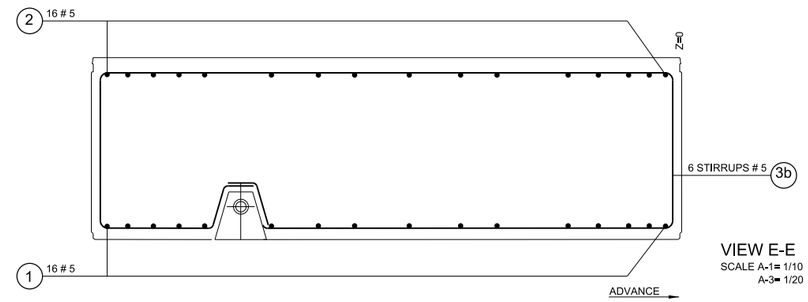

VIEW E-E
SCALE A-1= 1/10
A-3= 1/20

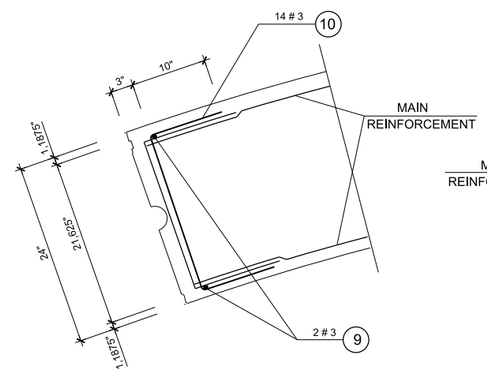

RADIAL JOINT REINFORCEMENT (SPALLING)
SCALE A-1= 1/10
A-3= 1/20

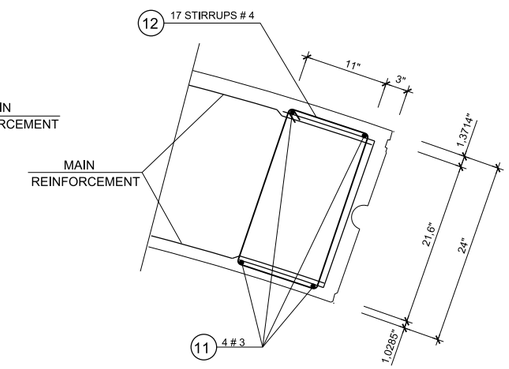

RADIAL JOINT REINFORCEMENT (BURSTING)
SCALE A-1= 1/10
A-3= 1/20

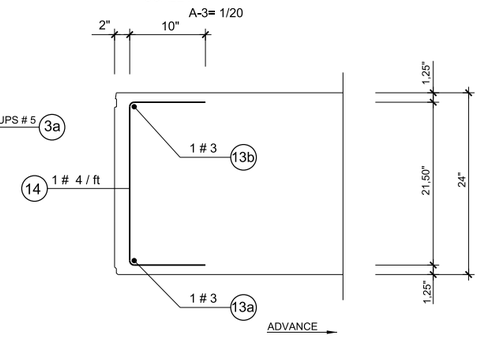

DETAIL - 1
SCALE A-1= 1/10
A-3= 1/20

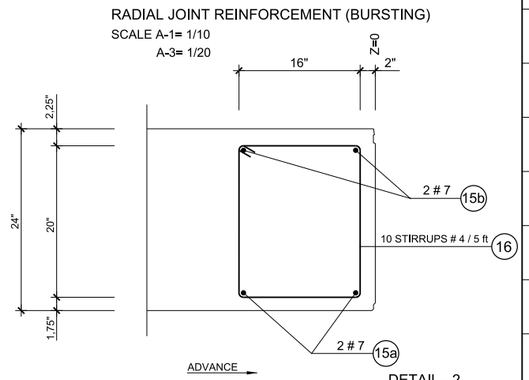

DETAIL - 2
SCALE A-1= 1/10
A-3= 1/20

BREAK UP OF REINFORCEMENT IN SEGMENT A6

ITEM	SKETCH	# DIAMETER OF IN.	LENGHT EN INCHES	NUMBER OF BARS	WEIGHT f/t POR UD.	WEIGHT f/t TOT. f/t	
1a	R=314,4375"	5	208,6786"	13	18,1376	235,7888	1
1b	R=314,4375"	5	100,3426"	2	8,7214"	17,4428	
1c	R=314,4375"	5	60"	4	5,215	20,8600	
1d	R=314,4375"	5	28,3909"	4	2,4676	9,8704	
2	R=333,0625"	5	221,2169"	16	19,2274	307,6384	
3a	6" 6" 75,3571" 20,5"	5	203,7142"	46	17,7061	814,4806	
3b	75,3571" 12,6" 6" 6 20,5"	5	209,9205"	6	18,2455	109,473	2
4	18,625" 12" 12"	5	42,625"	32	3,7048	118,5536	
5		4	48,5663"	10	2,7035	27,0350	
6	20"	3	20"	20	0,6266	12,5320	
7	STEP=2in. RADIO= 3in.	3	226,1947"	1	7,0874	7,0874	
8	STEP=2in. RADIO= 3in.	3	56,5487"	2	1,7718	3,5436	
9	75,3571	3	75,3571"	4	2,3611	9,4444	3
10	21,625" 10" 10"	3	41,625"	28	1,3042	36,5176	
11	75,3571	3	75,3571"	8	2,3611	18,8888	
12	5" 21,6" 11"	4	75,2"	34	4,1861	142,3274	
13a	R=313,6875"	3	209,1739	1	6,5541	6,5541	
13b	R=334,3125"	3	223,0586"	1	6,9892	6,9892	
14	21,5" 10" 10"	4	41,5"	18	2,3101	41,5818	4
15a	R=314,6875"	7	209,8471"	2	35,6866	71,3733	
15b	R=332,8125"	7	222,0489"	2	37,8222	75,6444	
16	5" 20" 16"	4	82"	36	4,5646	164,3256	

TOTAL f/t. 2257,9522

5

FILE NAME	IP_PWP:dms69908\46055-Txx-14TS049.DLV					
TIME	19-OCT-2010 15:56					
DATE	19-OCT-2010					
PLOTTED BY	groe					
DESIGNED BY	C. CALVO					
ENTERED BY	C. CALVO					
CHECKED BY	S. TREYGER					
PROJ. ENGR.	S. EVERETT					
REGIONAL ADM.	R. PAANANEN	REVISION	DATE	BY		

REGION NO.	STATE	FED.AID PROJ.NO.
10	WASH	
JOB NUMBER		
CONTRACT NO.		LOCATION NO.

SEMYON TREYGER STATE OF WASHINGTON 20868 STRUCTURAL ENGINEER PROFESSIONAL ENGINEER

RFP DESIGN
SUBMITTED BY
SEATTLE TUNNEL PARTNERS

NOT FOR CONSTRUCTION

Washington State Department of Transportation
U.S. Department of Transportation Federal Highway Administration
City of Seattle

ALASKAN WAY VIADUCT
REPLACEMENT PROJECT
SR 99 BORED TUNNEL
CONTRACT PACKAGE 14

SEGMENT
A6 REINFOREMENT

TS049

SHEET 124 OF 208 SHEETS

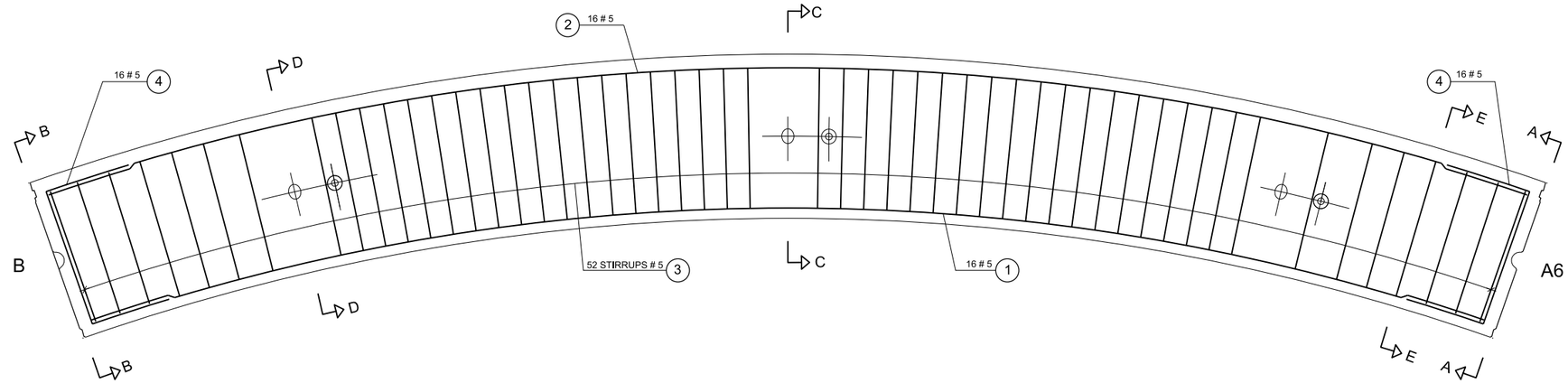

SEGMENT VIEW - A7
(FROM THE SHIELD) Z=0
SCALE A-1= 1/10
A-3= 1/20

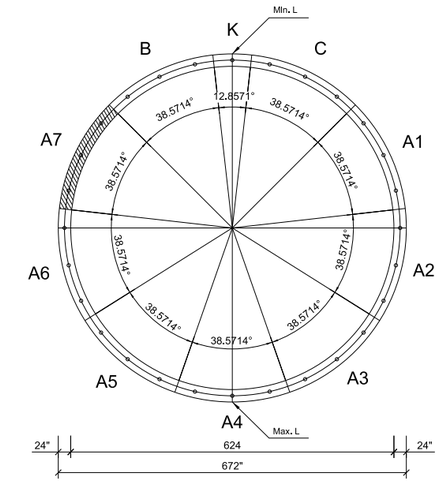

RING DEFINITION
S/E

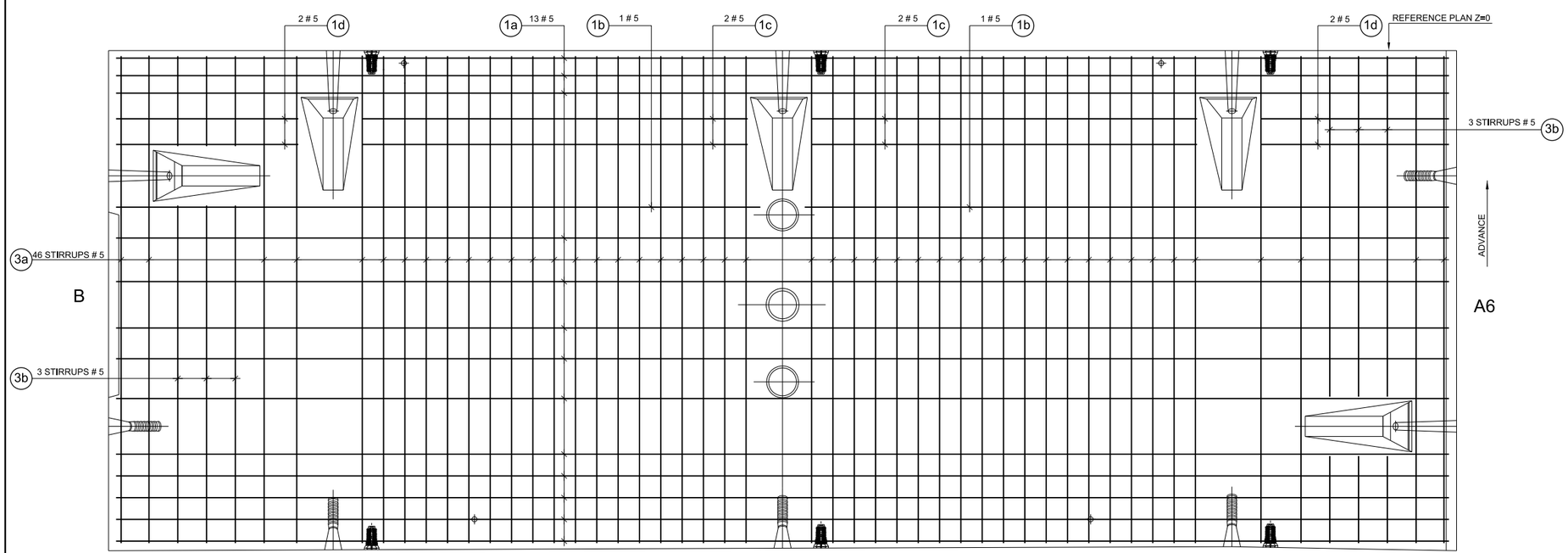

INNER FACE DEVELOPMENT
OF SEGMENT TYPE - A7
SCALE A-1= 1/10
A-3= 1/20

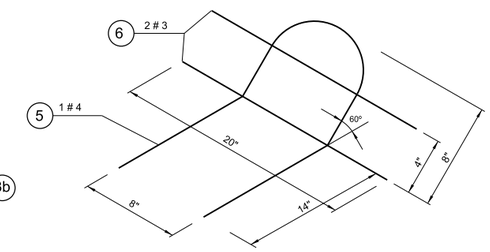

DETAIL OF REINFORCEMENT
IN BOLTS (TIP)

FILE NAME	IP_PWP:dms69908\46055-Txx-14TS050.DLV						
TIME	19-OCT-2010 15:56				REGION NO. 10	STATE WASH	FED.AID PROJ.NO.
DATE	19-OCT-2010				JOB NUMBER		
PLOTTED BY	groe						
DESIGNED BY	C. CALVO				CONTRACT NO.		LOCATION NO.
ENTERED BY	C. CALVO						
CHECKED BY	S. TREYGER						
PROJ. ENGR.	S. EVERETT						
REGIONAL ADM.	R. PAANANEN	REVISION	DATE	BY			

SEMYON TREYGER STATE OF WASHINGTON 20868 STRUCTURAL ENGINEER PROFESSIONAL ENGINEER

RFP DESIGN
SUBMITTED BY
SEATTLE TUNNEL PARTNERS

NOT FOR CONSTRUCTION

Washington State Department of Transportation
U.S. Department of Transportation Federal Highway Administration
City of Seattle

ALASKAN WAY VIADUCT
REPLACEMENT PROJECT
SR 99 BORED TUNNEL
CONTRACT PACKAGE 14

SEGMENT
A7 REINFOREMENT

TS050

SHEET 125 OF 208 SHEETS

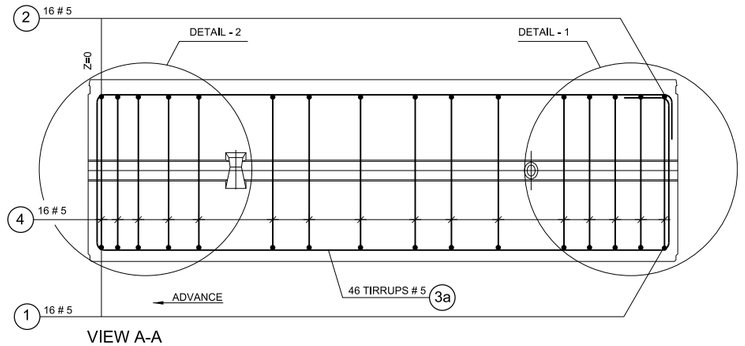

VIEW A-A
SCALE A-1= 1/10
A-3= 1/20

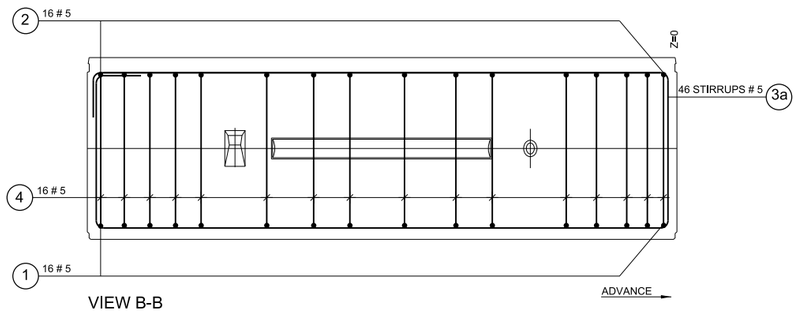

VIEW B-B
SCALE A-1= 1/10
A-3= 1/20

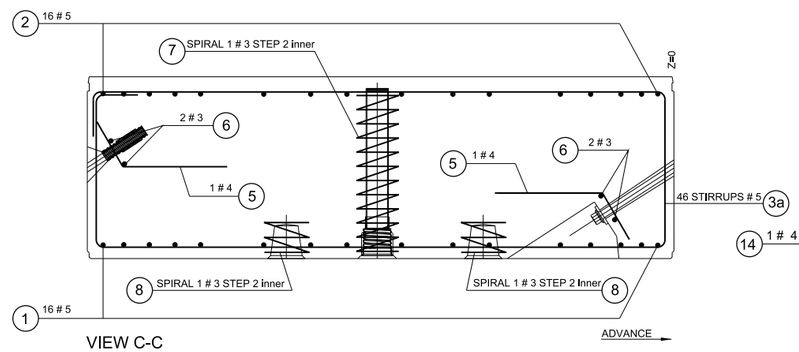

VIEW C-C
SCALE A-1= 1/10
A-3= 1/20

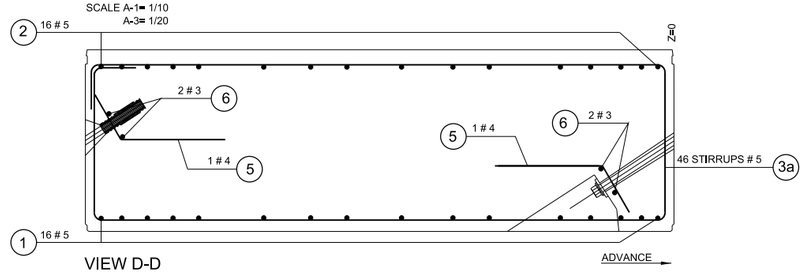

VIEW D-D
SCALE A-1= 1/10
A-3= 1/20

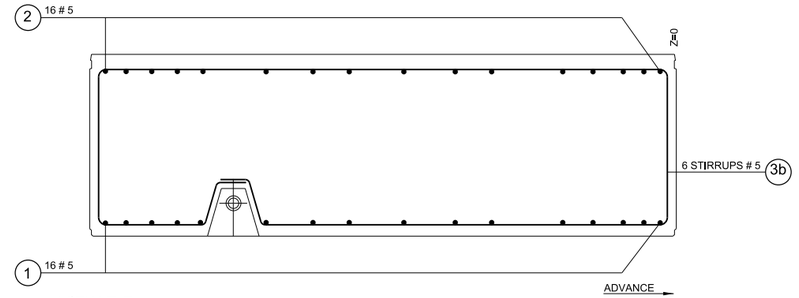

VIEW E-E
SCALE A-1= 1/10
A-3= 1/20

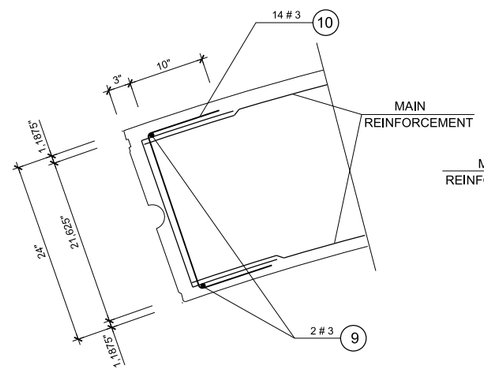

RADIAL JOINT REINFORCEMENT (SPALLING)
SCALE A-1= 1/10
A-3= 1/20

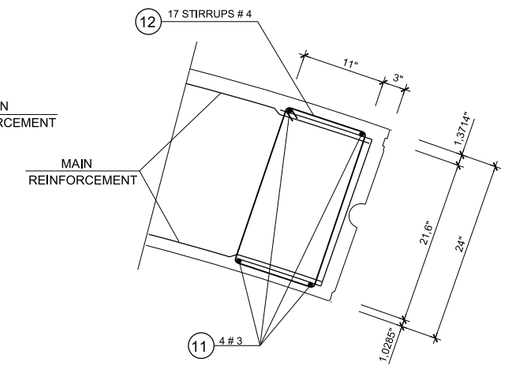

RADIAL JOINT REINFORCEMENT (BURSTING)
SCALE A-1= 1/10
A-3= 1/20

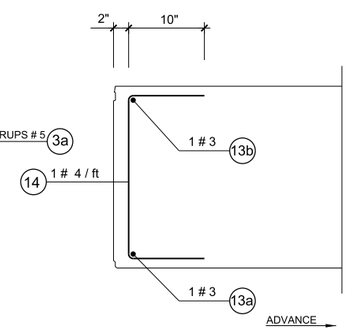

DETAIL - 1
SCALE A-1= 1/10
A-3= 1/20

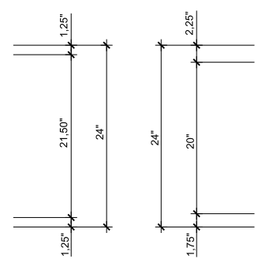

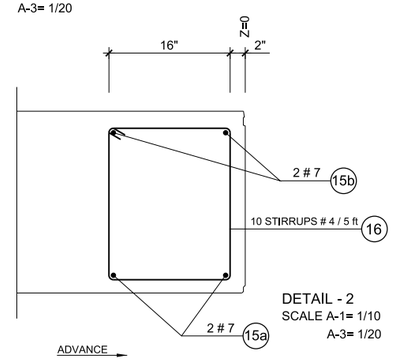

DETAIL - 2
SCALE A-1= 1/10
A-3= 1/20

BREAK UP OF REINFORCEMENT IN SEGMENT A7

ITEM	SKETCH	# DIAMETER OF IN.	LENGHT EN INCHES	NUMBER OF BARS	WEIGHT f/t POR UD.	WEIGHT f/t TOT. f/t	
1a	R=314,4375"	5	208,6786"	13	18,1376	235,7888	1
1b	R=314,4375"	5	100,3426"	2	8,7214"	17,4428	
1c	R=314,4375"	5	60"	4	5,215	20,8600	
1d	R=314,4375"	5	28,3909"	4	2,4676	9,8704	
2	R=333,0625"	5	221,2169"	16	19,2274	307,6384	
3a	6" 6" 75,3571" 20,5"	5	203,7142"	46	17,7061	814,4806	
3b	75,3571" 12,6" 6" 6" 20,5"	5	209,9205"	6	18,2455	109,473	2
4	18,625" 12" 12"	5	42,625"	32	3,7048	118,5536	
5		4	48,5663"	10	2,7035	27,0350	
6	20"	3	20"	20	0,6266	12,5320	
7	STEP=2in. RADIO= 3in.	3	226,1947"	1	7,0874	7,0874	
8	STEP=2in. RADIO= 3in.	3	56,5487"	2	1,7718	3,5436	
9	75,3571	3	75,3571"	4	2,3611	9,4444	3
10	21,625" 10" 10"	3	41,625"	28	1,3042	36,5176	
11	75,3571	3	75,3571"	8	2,3611	18,8888	
12	5" 11" 21,6"	4	75,2"	34	4,1861	142,3274	
13a	R=313,6875"	3	209,1739	1	6,5541	6,5541	
13b	R=334,3125"	3	223,0586"	1	6,9892	6,9892	
14	21,5" 10" 10"	4	41,5"	18	2,3101	41,5818	4
15a	R=314,6875"	7	209,8471"	2	35,6866	71,3733	
15b	R=332,8125"	7	222,0489"	2	37,8222	75,6444	
16	5" 16" 20"	4	82"	36	4,5646	164,3256	

TOTAL f/t. 2257,9522

5

FILE NAME	IP_PWP:dms69908\46055-Txx-14TS051.DLV
TIME	19-OCT-2010 15:56
DATE	19-OCT-2010
PLOTTED BY	groe
DESIGNED BY	C. CALVO
ENTERED BY	C. CALVO
CHECKED BY	S. TREYGER
PROJ. ENGR.	S. EVERETT
REGIONAL ADM.	R. PAANANEN

REVISION | DATE | BY

REGION NO.	STATE	FED.AID PROJ.NO.
10	WASH	
JOB NUMBER		
CONTRACT NO.		LOCATION NO.

SEMYON TREYGER STATE OF WASHINGTON 20868 AGRICULTURAL ENGINEER PROFESSIONAL ENGINEER

RFP DESIGN
SUBMITTED BY
SEATTLE TUNNEL PARTNERS

NOT FOR CONSTRUCTION

Washington State Department of Transportation
U.S. Department of Transportation Federal Highway Administration
City of Seattle

ALASKAN WAY VIADUCT
REPLACEMENT PROJECT
SR 99 BORED TUNNEL
CONTRACT PACKAGE 14

SEGMENT
A7 REINFOREMENT

TS051

SHEET 126 OF 208 SHEETS

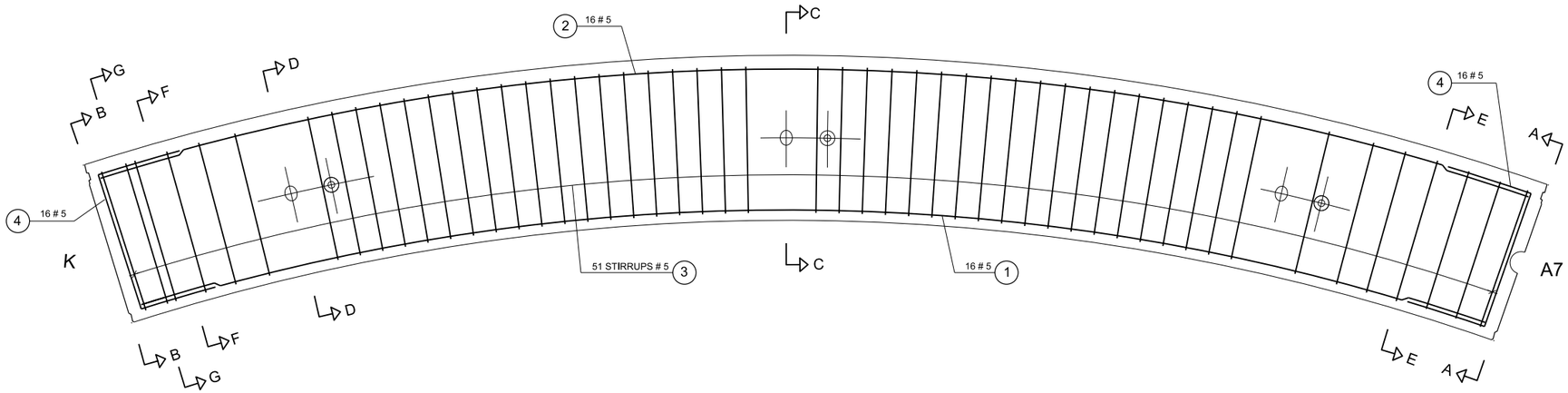

SEGMENT VIEW - B
(FROM THE SHIELD) Z=0
SCALE A-1= 1/10
A-3= 1/20

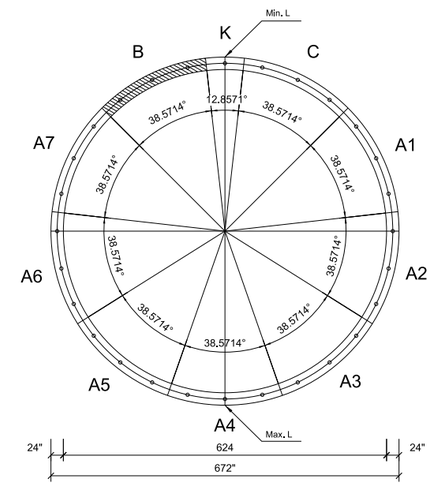

RING DEFINITION
S/E

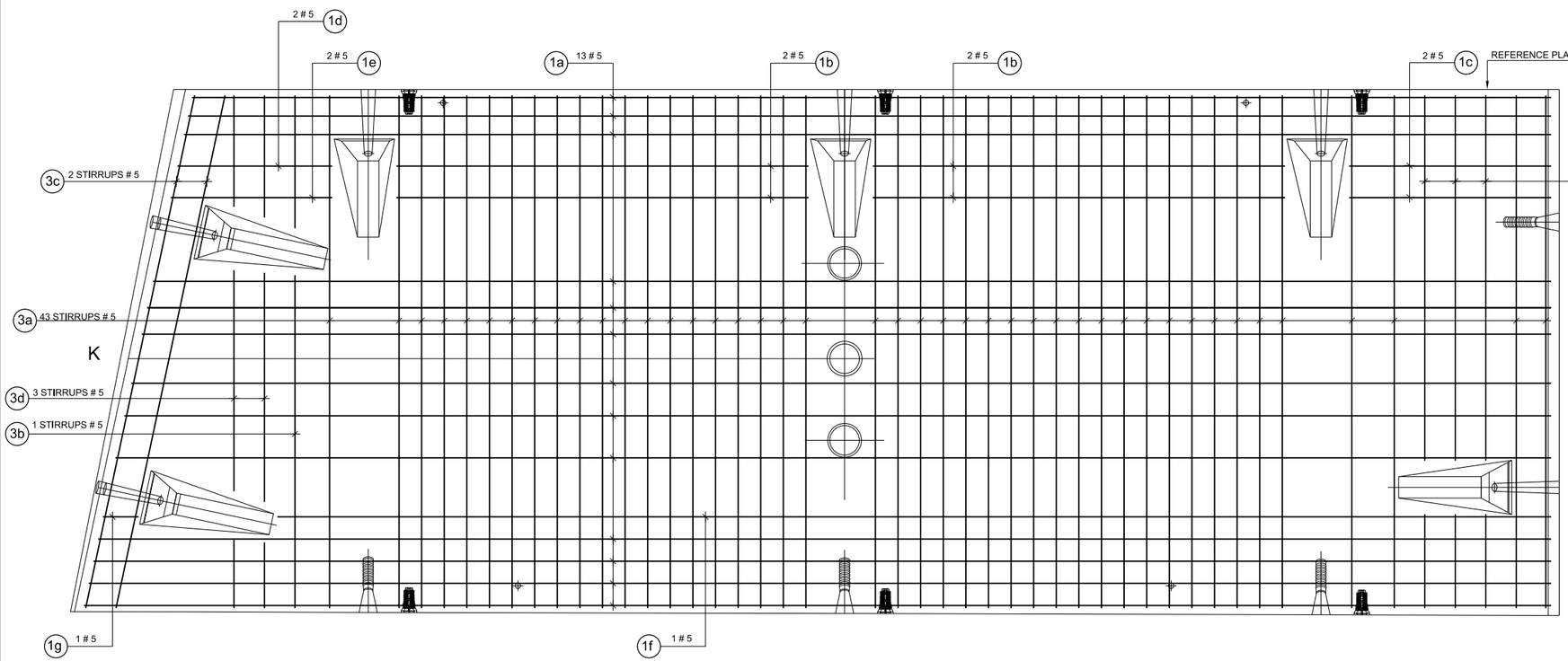

INNER FACE DEVELOPMENT
OF SEGMENT TYPE - B
SCALE A-1= 1/10
A-3= 1/20

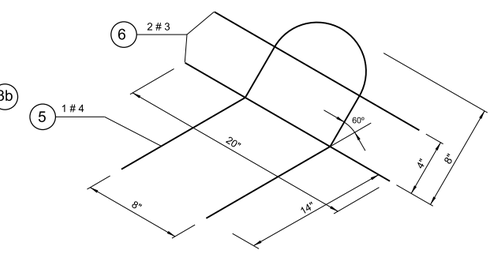

DETAIL OF REINFORCEMENT
IN BOLTS (TIP)

FILE NAME	IP_PWP:dms69908\46055-Txx-14TS052.DLV						
TIME	19-OCT-2010 15:57				REGION NO. 10	STATE WASH	FED.AID PROJ.NO.
DATE	19-OCT-2010				JOB NUMBER		
PLOTTED BY	groe						
DESIGNED BY	C. CALVO				CONTRACT NO.		LOCATION NO.
ENTERED BY	C. CALVO						
CHECKED BY	S. TREYGER						
PROJ. ENGR.	S. EVERETT						
REGIONAL ADM.	R. PAANANEN	REVISION	DATE	BY			

SEAMON TREYGER · STATE OF WASHINGTON · 20868 · STRUCTURAL ENGINEER · PROFESSIONAL ENGINEER

RFP DESIGN
SUBMITTED BY
SEATTLE TUNNEL PARTNERS

NOT FOR CONSTRUCTION

Washington State Department of Transportation
U.S. Department of Transportation Federal Highway Administration
City of Seattle

ALASKAN WAY VIADUCT
REPLACEMENT PROJECT
SR 99 BORED TUNNEL
CONTRACT PACKAGE 14

SEGMENT
B REINFOREMENT

TS052

SHEET 127 OF 208 SHEETS

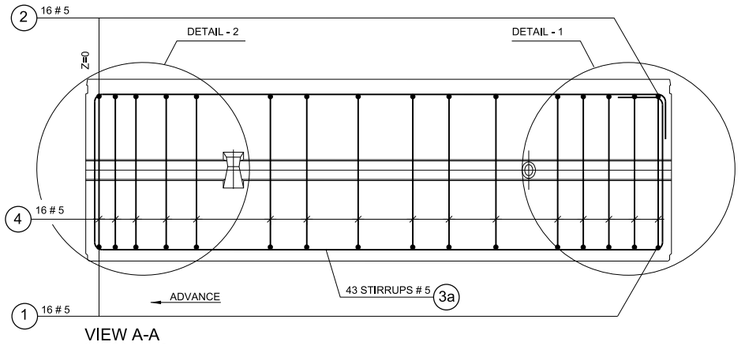

VIEW A-A
SCALE A-1= 1/10
A-3= 1/20

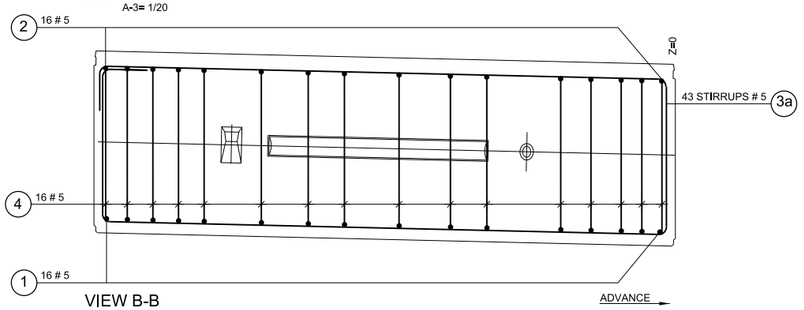

VIEW B-B
SCALE A-1= 1/10
A-3= 1/20

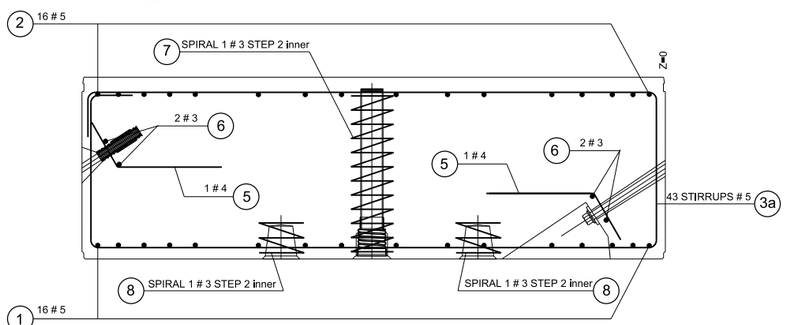

VIEW C-C
SCALE A-1= 1/10
A-3= 1/20

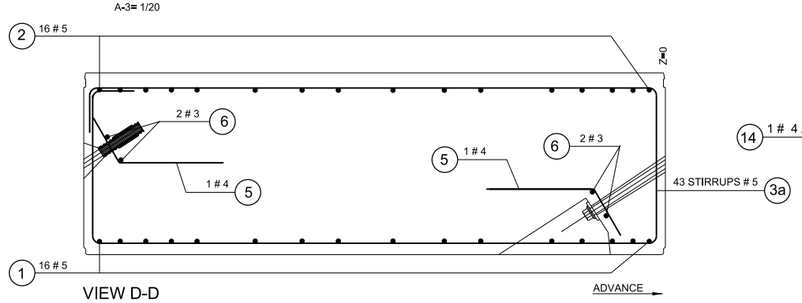

VIEW D-D
SCALE A-1= 1/10
A-3= 1/20

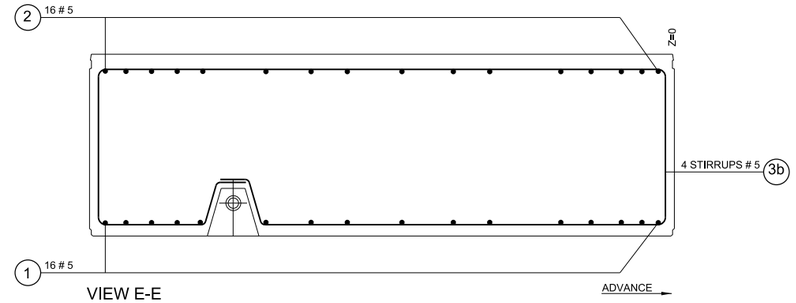

VIEW E-E
SCALE A-1= 1/10
A-3= 1/20

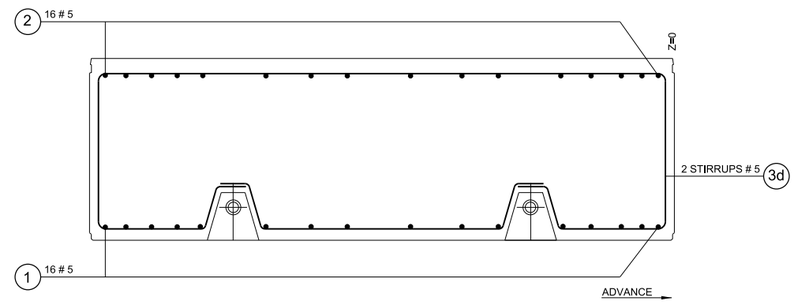

VIEW F-F
SCALE A-1= 1/10
A-3= 1/20

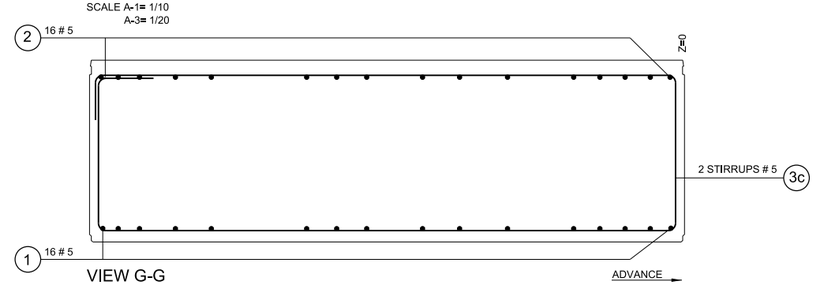

VIEW G-G
SCALE A-1= 1/10
A-3= 1/20

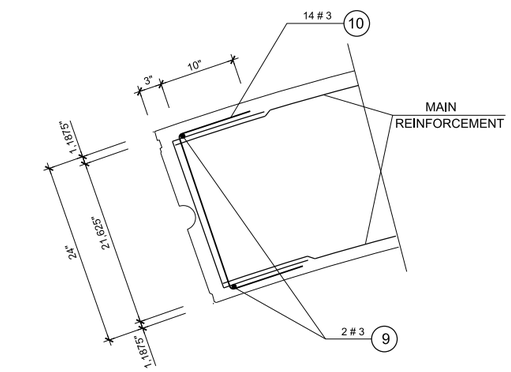

RADIAL JOINT REINFORCEMENT (SPALLING)
SCALE A-1= 1/10
A-3= 1/20

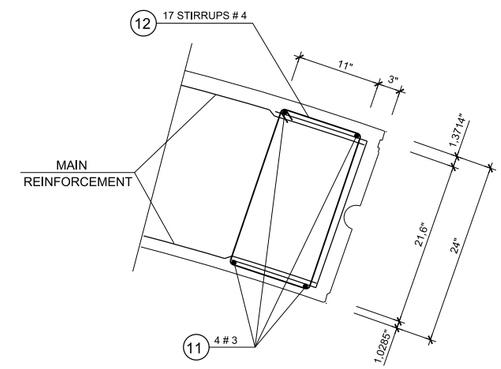

RADIAL JOINT REINFORCEMENT (BURSTING)
SCALE A-1= 1/10
A-3= 1/20

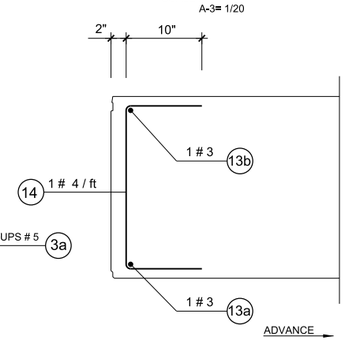

DETAIL - 1
SCALE A-1= 1/10
A-3= 1/20

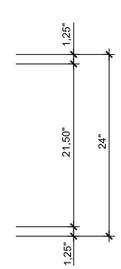

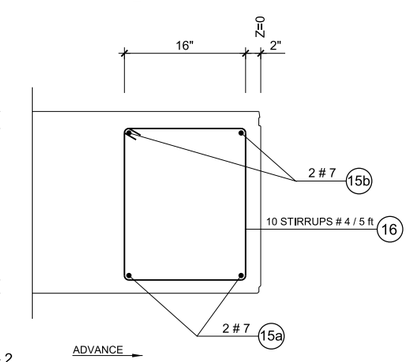

DETAIL - 2
SCALE A-1= 1/10
A-3= 1/20

FILE NAME	IP_PWP:dms69908\46055-Txx-14TS053.DLV				REGION NO.	STATE	FED.AID PROJ.NO.
TIME	19-OCT-2010 15:57				10	WASH	
DATE	19-OCT-2010				JOB NUMBER		
PLOTTED BY	groe						
DESIGNED BY	C. CALVO				CONTRACT NO.		LOCATION NO.
ENTERED BY	C. CALVO						
CHECKED BY	S. TREYGER						
PROJ. ENGR.	S. EVERETT						
REGIONAL ADM.	R. PAANANEN	REVISION	DATE	BY			

SEAMYON TREYGER · STATE OF WASHINGTON · 20868 · STRUCTURAL ENGINEER · PROFESSIONAL ENGINEER

RFP DESIGN
SUBMITTED BY
SEATTLE TUNNEL PARTNERS

NOT FOR CONSTRUCTION

Washington State Department of Transportation
U.S. Department of Transportation Federal Highway Administration
City of Seattle

ALASKAN WAY VIADUCT
REPLACEMENT PROJECT
SR 99 BORED TUNNEL
CONTRACT PACKAGE 14

SEGMENT
B REINFOREMENT

TS053

SHEET 128 OF 208 SHEETS

BREAK UP OF REINFORCEMENT IN SEGMENT B

ITEM	SKETCH	# DIAMETER OF IN.	LENGHT EN INCHES	NUMBER OF BARS	WEIGHT f/t POR UD.	WEIGHT f/t TOT. f/t
1a	R=314,4375"	5	208,6786"	13	18,1376	235,7888
1b	R=314,4375"	5	60"	4	5,2150	20,8600
1c	R=314,4375"	5	28,3909"	2	2,4876	4,9752
1d	R=314,4375"	5	22,3540"	1	1,9429	1,9429
1e	R=314,4375"	5	23,3400"	1	2,0286	2,0286
1f	R=314,4375"	5	187,1650"	1	16,2677	16,2677
1g	R=314,4375"	5	5,2500"	1	0,4563	0,4563
2	R=333,0625"	5	221,2169"	16	19,2274	307,6384
3a	6" 6" 75,0560" 20,5"	5	203,3112"	43	17,6711	759,8573
3b	75,0560" 6" 12,6" 5 20,5"	5	209,6194"	4	18,2194	72,8776
3c	6" 6" 76,49" 20,5"	5	205,98"	2	17,9030	35,8060
3d	75,0560" 6" 12,6" 5 9,78" 20,5"	5	215,9276"	2	18,7677	37,5354
4	12" 18,625" 12"	5	42,625"	32	3,7048	118,5536
5		4	48,5663"	10	2,7035	27,0350
6	20"	3	20"	20	0,6266	12,5320
7	STEP=2in. RADIO= 3in.	3	226,1947"	1	7,0874	7,0874
8	STEP=2in. RADIO= 3in.	3	56,5487"	2	1,7718	3,5436
9a	75,056"	3	75,056"	2	2,3517	4,7034
9b	76,49"	3	76,49"	2	2,3967	4,7934
10	10" 21,625" 10"	3	41,625"	28	1,3042	36,5176
11a	75,056"	3	75,056"	4	2,3517	9,4068
11b	76,49"	3	76,49"	4	2,3967	9,5868
12	5" 11" 21,6"	4	75,2"	34	4,1861	142,3274
13a	R=313,6875"	3	216,1982	1	6,7742	6,7742
13b	R=334,3125"	3	224,1946"	1	7,0247	7,0247
14	10" 21,5" 10"	4	41,5"	19	2,3101	43,8919
15a	R=314,6875"	7	203,3256"	2	34,6331	69,2662
15b	R=332,8125"	7	213,3449"	2	36,3397	72,6794
16	5" 16" 20"	4	82"	34	4,5646	155,1964

TOTAL f/t. 2226,954

FILE NAME	IP_PWP:dms69908\46055-Txx-14TS054.DLV
TIME	19-OCT-2010 15:57
DATE	19-OCT-2010
PLOTTED BY	groe
DESIGNED BY	C. CALVO
ENTERED BY	C. CALVO
CHECKED BY	S. TREYGER
PROJ. ENGR.	S. EVERETT
REGIONAL ADM.	R. PAANANEN

REVISION | DATE | BY

REGION NO. 10 | STATE WASH | FED.AID PROJ.NO.

JOB NUMBER

CONTRACT NO. | LOCATION NO.

SEAMON TREIGER STATE OF WASHINGTON 20868 REGISTERED PROFESSIONAL ENGINEER

RFP DESIGN

SUBMITTED BY SEATTLE TUNNEL PARTNERS

NOT FOR CONSTRUCTION

Washington State Department of Transportation

U.S. Department of Transportation Federal Highway Administration

City of Seattle

ALASKAN WAY VIADUCT REPLACEMENT PROJECT
SR 99 BORED TUNNEL
CONTRACT PACKAGE 14

SEGMENT B REINFOREMENT

TS054

SHEET 129 OF 208 SHEETS

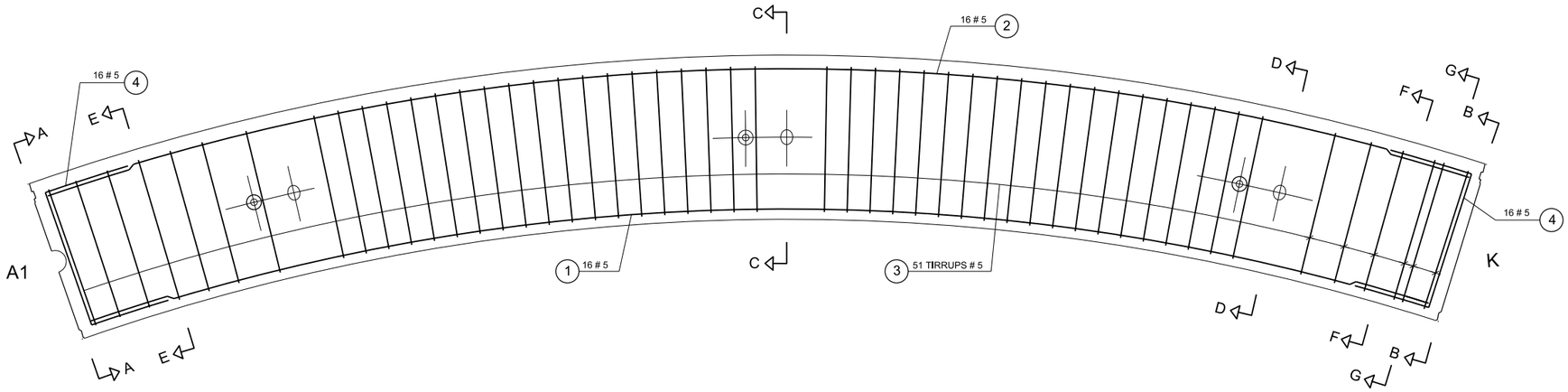

SEGMENT VIEW - C
(FROM THE SHIELD) Z=0
SCALE A-1= 1/10
A-3= 1/20

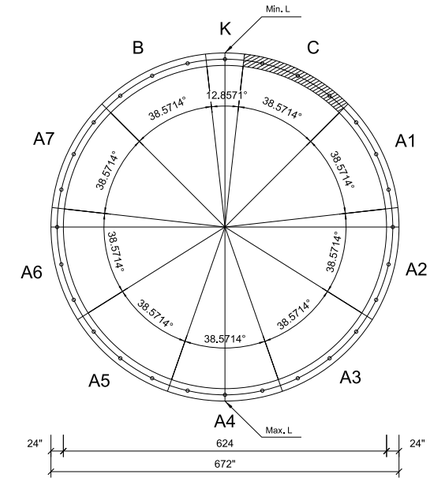

RING DEFINITION
S/E

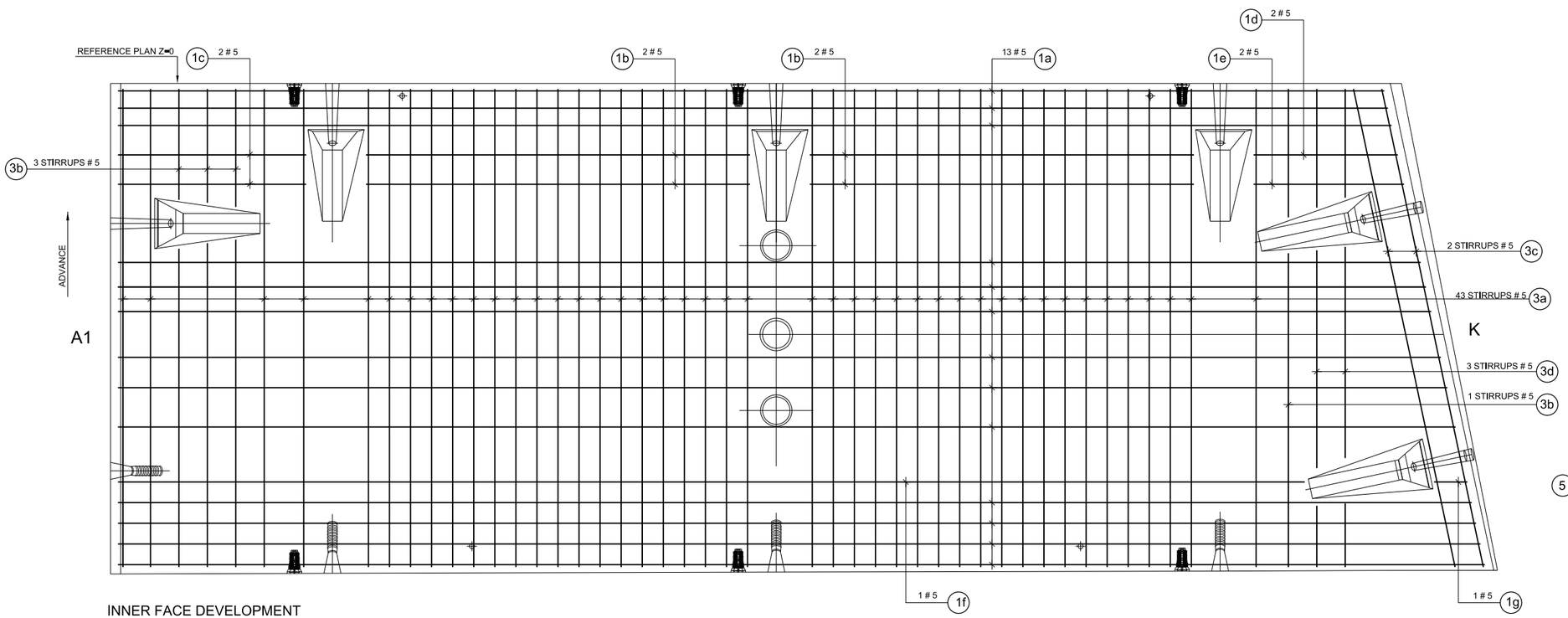

INNER FACE DEVELOPMENT
OF SEGMENT TYPE - B
SCALE A-1= 1/10
A-3= 1/20

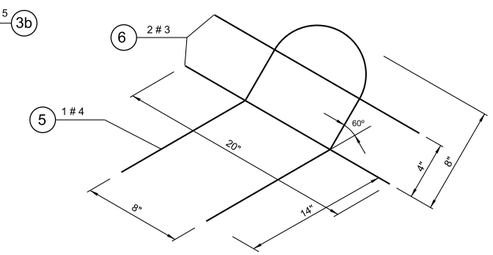

DETAIL OF REINFORCEMENT
IN BOLTS (TIP)

FILE NAME	IP_PWP:dms69908\46055-Txx-14TS055.DLV					
TIME	19-OCT-2010 15:57				REGION NO. 10	STATE WASH
DATE	19-OCT-2010					FED.AID PROJ.NO.
PLOTTED BY	groe				JOB NUMBER	
DESIGNED BY	C. CALVO					
ENTERED BY	C. CALVO					
CHECKED BY	S. TREYGER				CONTRACT NO.	LOCATION NO.
PROJ. ENGR.	S. EVERETT					
REGIONAL ADM.	R. PAANANEN	REVISION	DATE	BY		

SEMYON TREYGER — STATE OF WASHINGTON — 20868 — REGISTERED PROFESSIONAL ENGINEER

RFP DESIGN
SUBMITTED BY
SEATTLE TUNNEL PARTNERS

NOT FOR CONSTRUCTION

Washington State Department of Transportation
U.S. Department of Transportation Federal Highway Administration
City of Seattle

ALASKAN WAY VIADUCT REPLACEMENT PROJECT
SR 99 BORED TUNNEL
CONTRACT PACKAGE 14

SEGMENT C REINFORCEMENT

TS055

SHEET 130 OF 208 SHEETS

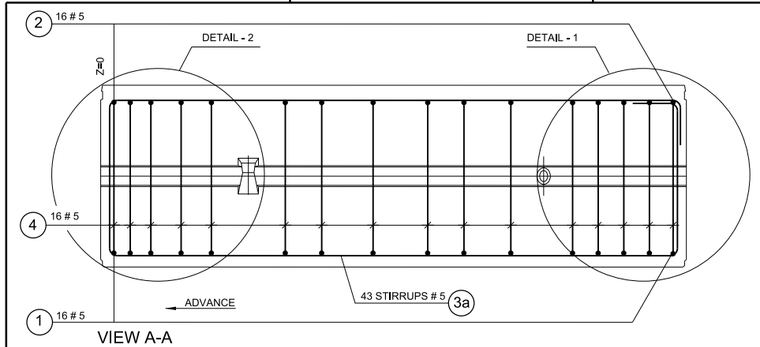

VIEW A-A
SCALE A-1= 1/10
A-3= 1/20

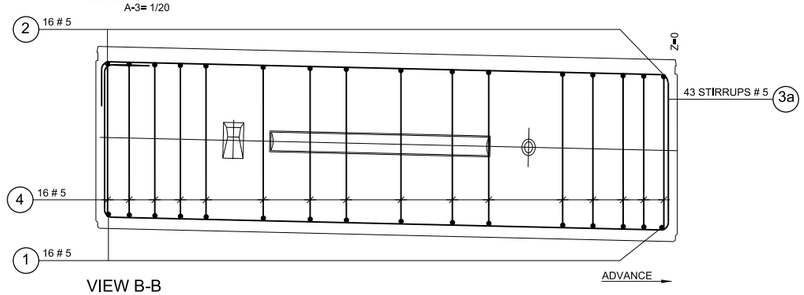

VIEW B-B
SCALE A-1= 1/10
A-3= 1/20

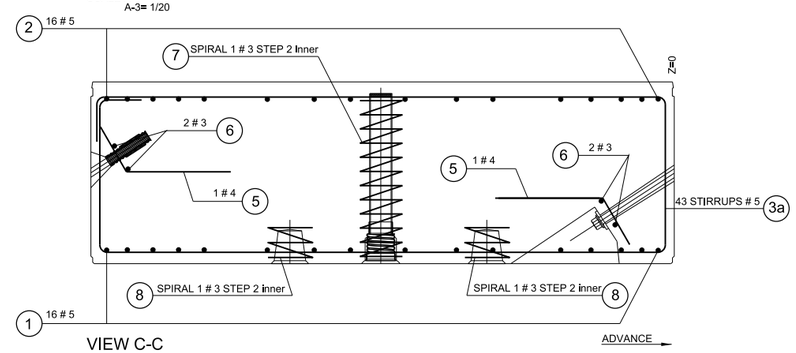

VIEW C-C
SCALE A-1= 1/10
A-3= 1/20

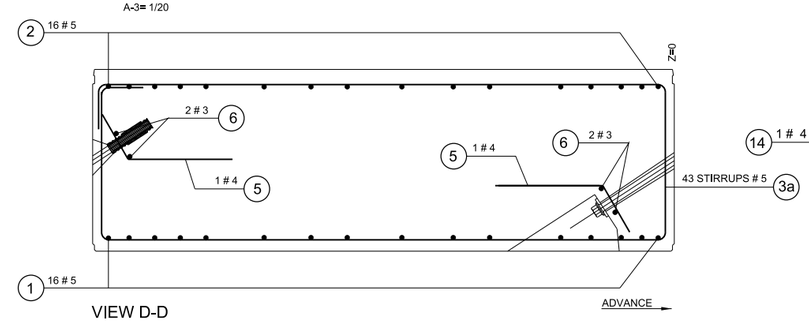

VIEW D-D
SCALE A-1= 1/10
A-3= 1/20

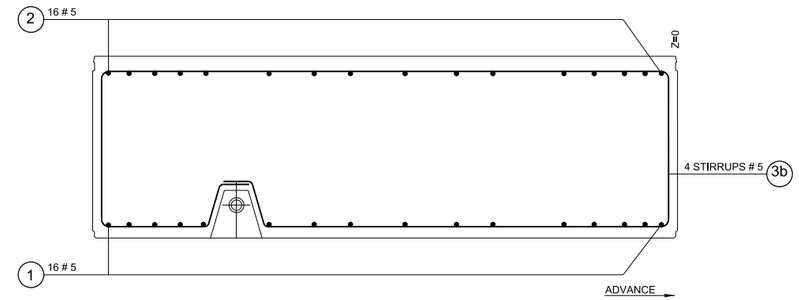

VIEW E-E
SCALE A-1= 1/10
A-3= 1/20

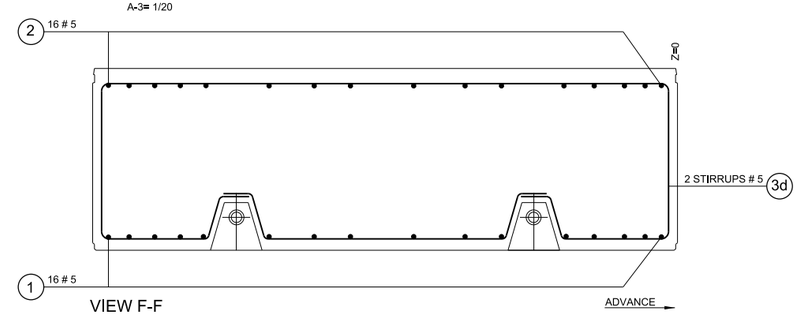

VIEW F-F
SCALE A-1= 1/10
A-3= 1/20

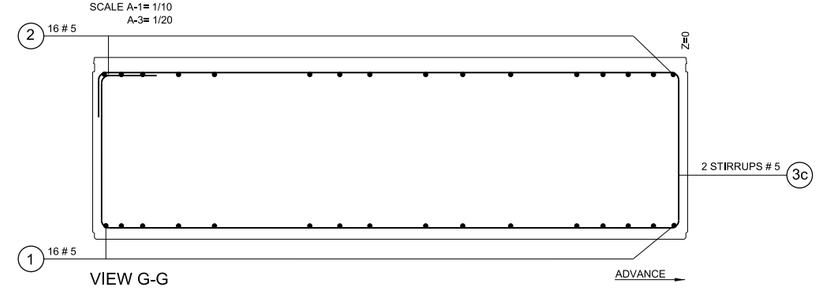

VIEW G-G
SCALE A-1= 1/10
A-3= 1/20

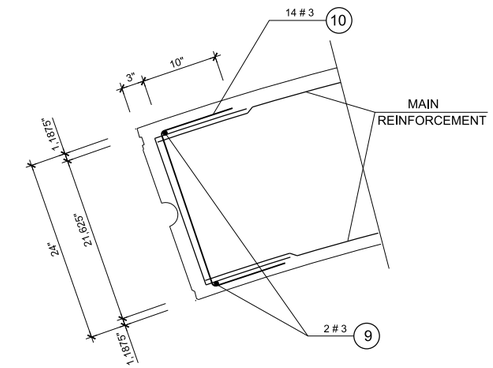

RADIAL JOINT REINFORCEMENT (SPALLING)
SCALE A-1= 1/10
A-3= 1/20

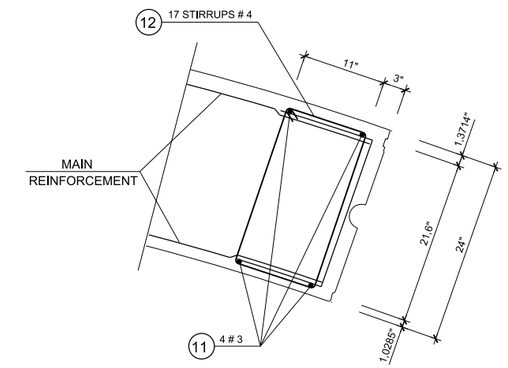

RADIAL JOINT REINFORCEMENT (BURSTING)
SCALE A-1= 1/10
A-3= 1/20

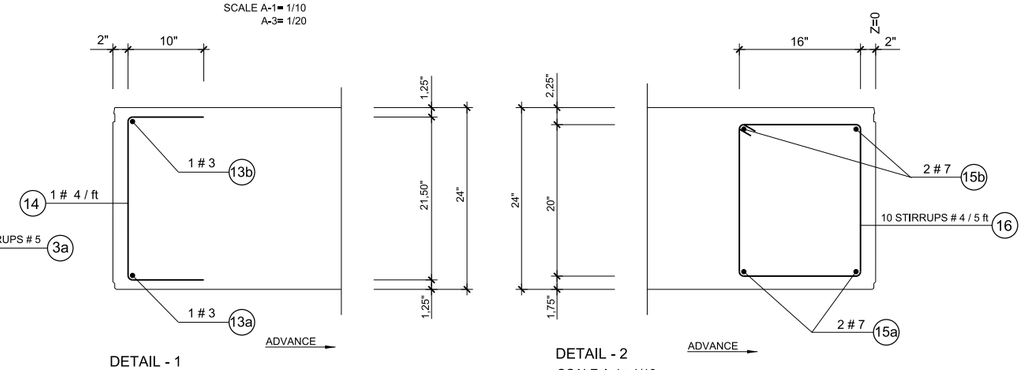

DETAIL - 1
SCALE A-1= 1/10
A-3= 1/20

DETAIL - 2
SCALE A-1= 1/10
A-3= 1/20

FILE NAME	IP_PWP:dms69908\46055-Txx-14TS056.DLV					
TIME	19-OCT-2010 15:58					
DATE	19-OCT-2010					
PLOTTED BY	groe					
DESIGNED BY	C. CALVO					
ENTERED BY	C. CALVO					
CHECKED BY	S. TREYGER					
PROJ. ENGR.	S. EVERETT					
REGIONAL ADM.	R. PAANANEN	REVISION	DATE	BY		

REGION NO.	STATE	FED.AID PROJ.NO.
10	WASH	
JOB NUMBER		
CONTRACT NO.		LOCATION NO.

SEMTON TREYGER STATE OF WASHINGTON 20868 STRUCTURAL ENGINEER PROFESSIONAL ENGINEER

RFP DESIGN
SUBMITTED BY
SEATTLE TUNNEL PARTNERS

NOT FOR CONSTRUCTION

Washington State Department of Transportation
U.S. Department of Transportation Federal Highway Administration
City of Seattle

ALASKAN WAY VIADUCT
REPLACEMENT PROJECT
SR 99 BORED TUNNEL
CONTRACT PACKAGE 14

SEGMENT
C REINFOREMENT

TS056

SHEET 131 OF 208 SHEETS

BREAK UP OF REINFORCEMENT IN SEGMENT C

ITEM	SKETCH	# DIAMETER OF IN.	LENGHT EN INCHES	NUMBER OF BARS	WEIGHT f/t POR UD.	WEIGHT f/t TOT. f/t
1a	R=314,4375"	5	208,6786"	13	18,1376	235,7888
1b	R=314,4375"	5	60"	4	5,2150	20,8600
1c	R=314,4375"	5	28,3909"	2	2,4876	4,9752
1d	R=314,4375"	5	22,3540"	1	1,9429	1,9429
1e	R=314,4375"	5	23,3400"	1	2,0286	2,0286
1f	R=314,4375"	5	187,1650"	1	16,2677	16,2677
1g	R=314,4375"	5	5,2500"	1	0,4563	0,4563
2	R=333,0625"	5	221,2169"	16	19,2274	307,6384
3a	6" 6" 75,0560" 20,5"	5	203,3112"	43	17,6711	759,8573
3b	75,0560" 6" 12,6" 5 20,5"	5	209,6194"	4	18,2194	72,8776
3c	6" 6" 76,49" 20,5"	5	205,98"	2	17,9030	35,8060
3d	75,0560" 6" 12,6" 5 9,78" 20,5"	5	215,9276"	2	18,7677	37,5354
4	12" 18,625" 12"	5	42,625"	32	3,7048	118,5536
5		4	48,5663"	10	2,7035	27,0350
6	20"	3	20"	20	0,6266	12,5320
7	STEP=2in. RADIO= 3in.	3	226,1947"	1	7,0874	7,0874
8	STEP=2in. RADIO= 3in.	3	56,5487"	2	1,7718	3,5436
9a	75,056"	3	75,056"	2	2,3517	4,7034
9b	76,49"	3	76,49"	2	2,3967	4,7934
10	10" 21,625" 10"	3	41,625"	28	1,3042	36,5176
11a	75,056"	3	75,056"	4	2,3517	9,4068
11b	76,49"	3	76,49"	4	2,3967	9,5868
12	5" 11" 21,6"	4	75,2"	34	4,1861	142,3274
13a	R=313,6875"	3	216,1982	1	6,7742	6,7742
13b	R=334,3125"	3	224,1946"	1	7,0247	7,0247
14	10" 21,5" 10"	4	41,5"	19	2,3101	43,8919
15a	R=314,6875"	7	203,3256"	2	34,6331	69,2662
15b	R=332,8125"	7	213,3449"	2	36,3397	72,6794
16	5" 16" 20"	4	82"	34	4,5646	155,1964

TOTAL f/t. 2226,954

FILE NAME	IP_PWP:dms69908\46055-Txx-14TS057.DLV
TIME	19-OCT-2010 15:58
DATE	19-OCT-2010
PLOTTED BY	groe
DESIGNED BY	C. CALVO
ENTERED BY	C. CALVO
CHECKED BY	S. TREYGER
PROJ. ENGR.	S. EVERETT
REGIONAL ADM.	R. PAANANEN

REVISION | DATE | BY

REGION NO. 10 | STATE WASH | FED.AID PROJ.NO.

JOB NUMBER

CONTRACT NO. | LOCATION NO.

SEMYON TREYGER STATE OF WASHINGTON 20868 REGISTERED PROFESSIONAL ENGINEER

RFP DESIGN

SUBMITTED BY SEATTLE TUNNEL PARTNERS

NOT FOR CONSTRUCTION

Washington State Department of Transportation

U.S. Department of Transportation Federal Highway Administration

City of Seattle

ALASKAN WAY VIADUCT REPLACEMENT PROJECT SR 99 BORED TUNNEL CONTRACT PACKAGE 14

SEGMENT C REINFOREMENT

TS057

SHEET 132 OF 208 SHEETS

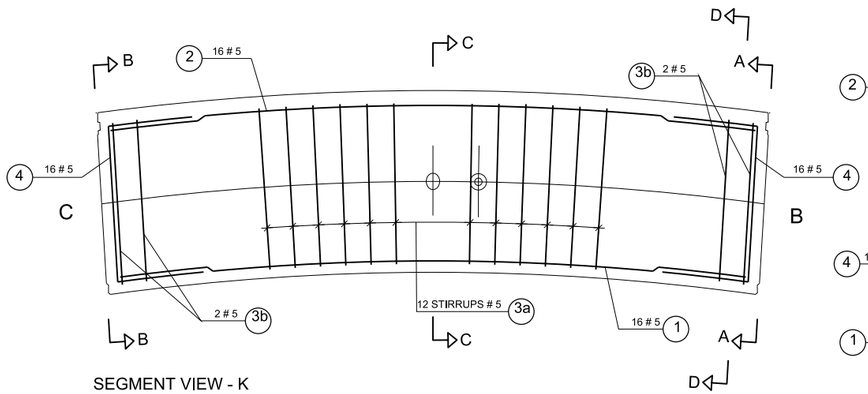

SEGMENT VIEW - K
(FROM THE SHIELD) Z=0
SCALE A-1= 1/10
A-3= 1/20

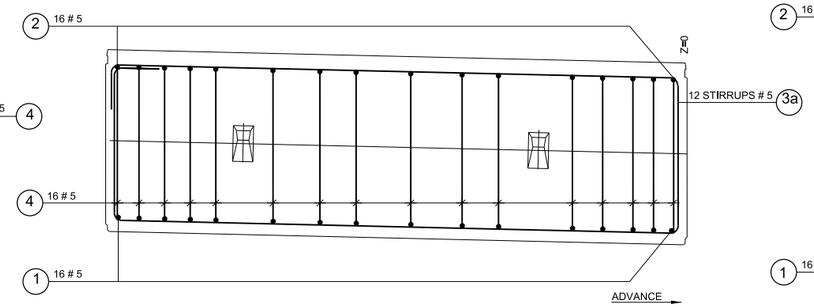

VIEW B-B
SCALE A-1= 1/10
A-3= 1/20

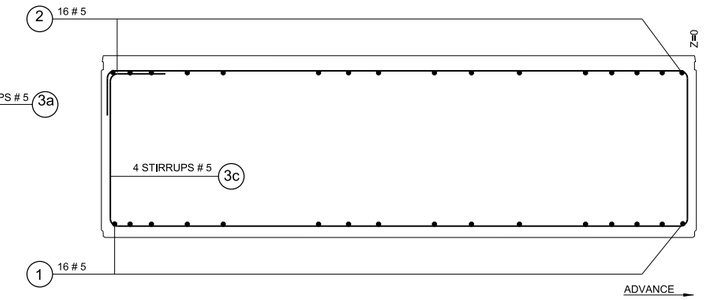

VIEW D-D
SCALE A-1= 1/10
A-3= 1/20

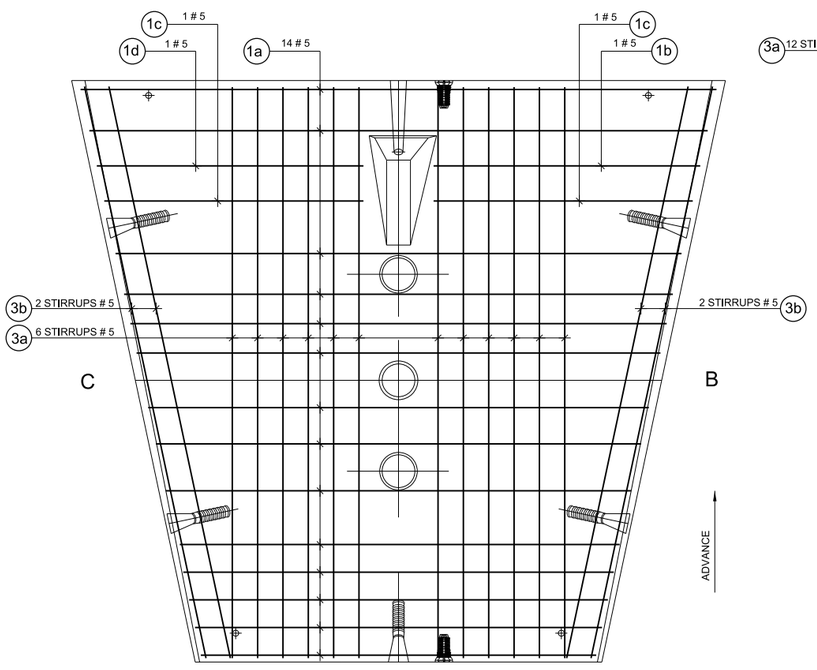

INNER FACE DEVELOPMENT
OF SEGMENT TYPE - K
SCALE A-1= 1/10
A-3= 1/20

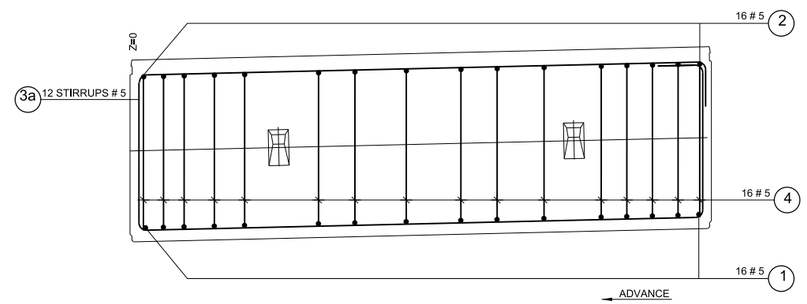

VIEW B-B
SCALE A-1= 1/10
A-3= 1/20

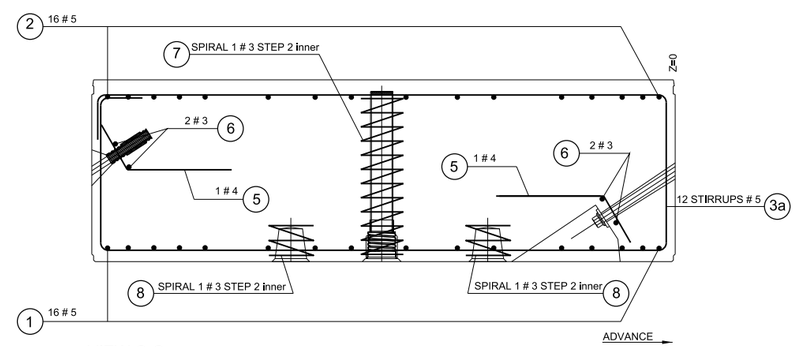

VIEW C-C
SCALE A-1= 1/10
A-3= 1/20

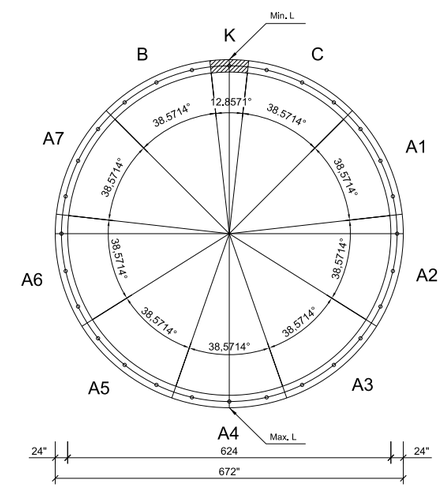

RING DEFINITION
S/E

FILE NAME	IP_PWP:dms69908\46055-Txx-14TS058.DLV						
TIME	19-OCT-2010 15:58				REGION NO. 10	STATE WASH	FED.AID PROJ.NO.
DATE	19-OCT-2010						
PLOTTED BY	groe				JOB NUMBER		
DESIGNED BY	C. CALVO						
ENTERED BY	C. CALVO						
CHECKED BY	S. TREYGER				CONTRACT NO.		LOCATION NO.
PROJ. ENGR.	S. EVERETT						
REGIONAL ADM.	R. PAANANEN	REVISION	DATE	BY			

SEMYON TREYGER
STATE OF WASHINGTON
20868
STRUCTURAL ENGINEER
PROFESSIONAL ENGINEER

RFP DESIGN
SUBMITTED BY
SEATTLE TUNNEL PARTNERS

NOT FOR CONSTRUCTION

Washington State Department of Transportation
U.S. Department of Transportation Federal Highway Administration
City of Seattle

ALASKAN WAY VIADUCT
REPLACEMENT PROJECT
SR 99 BORED TUNNEL
CONTRACT PACKAGE 14

SEGMENT
K REINFOREMENT

TS058

SHEET 133 OF 208 SHEETS

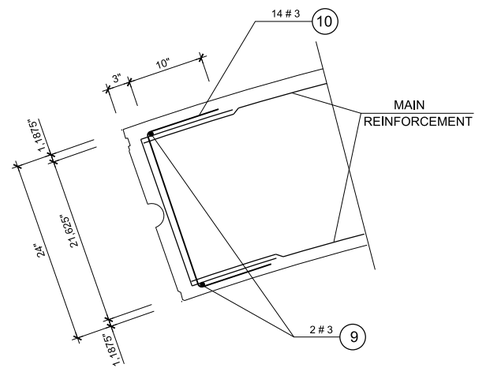

RADIAL JOINT REINFORCEMENT (SPALLING)
SCALE A-1= 1/10
A-3= 1/20

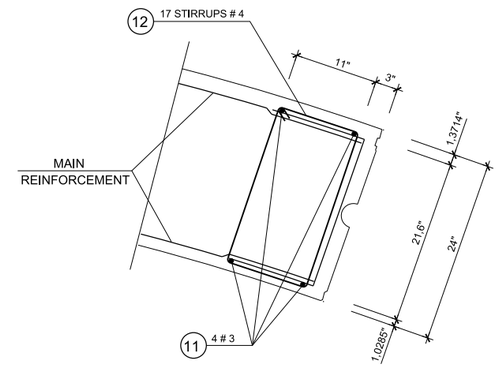

RADIAL JOINT REINFORCEMENT (BURSTING)
SCALE A-1= 1/10
A-3= 1/20

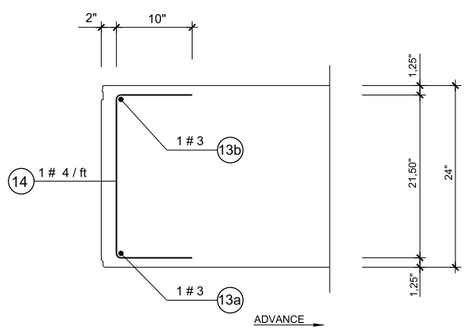

DETAIL - 1
SCALE A-1= 1/10
A-3= 1/20

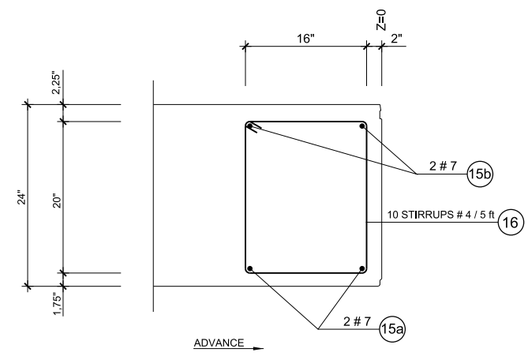

DETAIL - 2
SCALE A-1= 1/10
A-3= 1/20

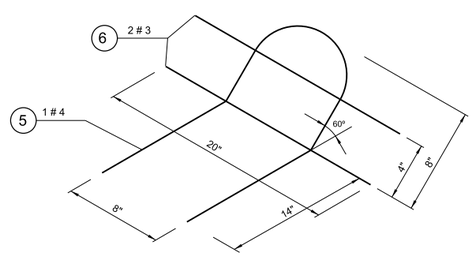

DETAIL OF REINFORCEMENT
IN BOLTS (TIP)

BREAK UP OF REINFORCEMENT IN SEGMENT K

ITEM	SKETCH	# DIAMETER OF IN.	LENGHT EN INCHES	NUMBER OF BARS	WEIGHT f/t POR UD.	WEIGHT f/t TOT. f/t
1a	R=314,4375"	5	68,5582"	14	5,9588	83,4332
1b	R=314,4375"	5	33,2094"	2	2,8864	5,7728
1c	R=314,4375"	5	32,1235	2	2,7921	5,5842
2	R=333,0625"	5	70,2425"	16	6,1052	97,6832
3a	6" 6" 74,7709" 20,5"	5	202,5418	12	17,6042	211,2504
3b	6" 6" 76,49" 20,5"	5	205,98"	4	17,9030	71,612
4	12" 18,625" 12"	5	42,625"	32	3,7048	118,5536
5		4	48,5663"	6	2,7035	16,221
6	20"	3	20"	12	0,6266	7,5192
7	STEP=2in. RADIO= 3in.	3	226,1947"	1	7,0874	7,0874
8	STEP=2in. RADIO= 3in.	3	56,5487"	2	1,7718	3,5436
9	76,49"	3	76,49"	4	2,3967	9,5868
10	10" 21,625" 10"	3	41,625"	28	1,3042	36,5176
11	76,49"	3	76,49"	8	2,3967	19,1736
12	5" 21,6" 11"	4	75,2"	34	4,1861	142,3274
13a	R=313,6875"	3	51,6919"	1	1,6153	1,6153
13b	R=334,3125"	3	54,564"	1	1,7051	1,7051
14	10" 21,5" 10"	4	41,5"	6	2,3101	13,8606
15a	R=314,6875"	7	84,3308"	2	14,3643	28,7286
15b	R=332,8125"	7	87,1961"	2	14,8524	29,7048
16	5" 20" 16"	4	82"	16	4,5646	73,0336

TOTAL f/t. 984,5142

FILE NAME	IP_PWP:dms69908\46055-Txx-14TS059.DLV
TIME	19-OCT-2010 15:59
DATE	19-OCT-2010
PLOTTED BY	groe
DESIGNED BY	C. CALVO
ENTERED BY	C. CALVO
CHECKED BY	S. TREYGER
PROJ. ENGR.	S. EVERETT
REGIONAL ADM.	R. PAANANEN

REVISION | DATE | BY

REGION NO. 10 | STATE WASH | FED.AID PROJ.NO.
JOB NUMBER
CONTRACT NO. | LOCATION NO.

SEMYON TREYGER STATE OF WASHINGTON 20868 STRUCTURAL ENGINEER PROFESSIONAL ENGINEER

RFP DESIGN
SUBMITTED BY
SEATTLE TUNNEL PARTNERS

NOT FOR CONSTRUCTION

Washington State Department of Transportation
U.S. Department of Transportation Federal Highway Administration
City of Seattle

ALASKAN WAY VIADUCT
REPLACEMENT PROJECT
SR 99 BORED TUNNEL
CONTRACT PACKAGE 14

SEGMENT
K REINFOREMENT

TS059

SHEET 134 OF 208 SHEETS

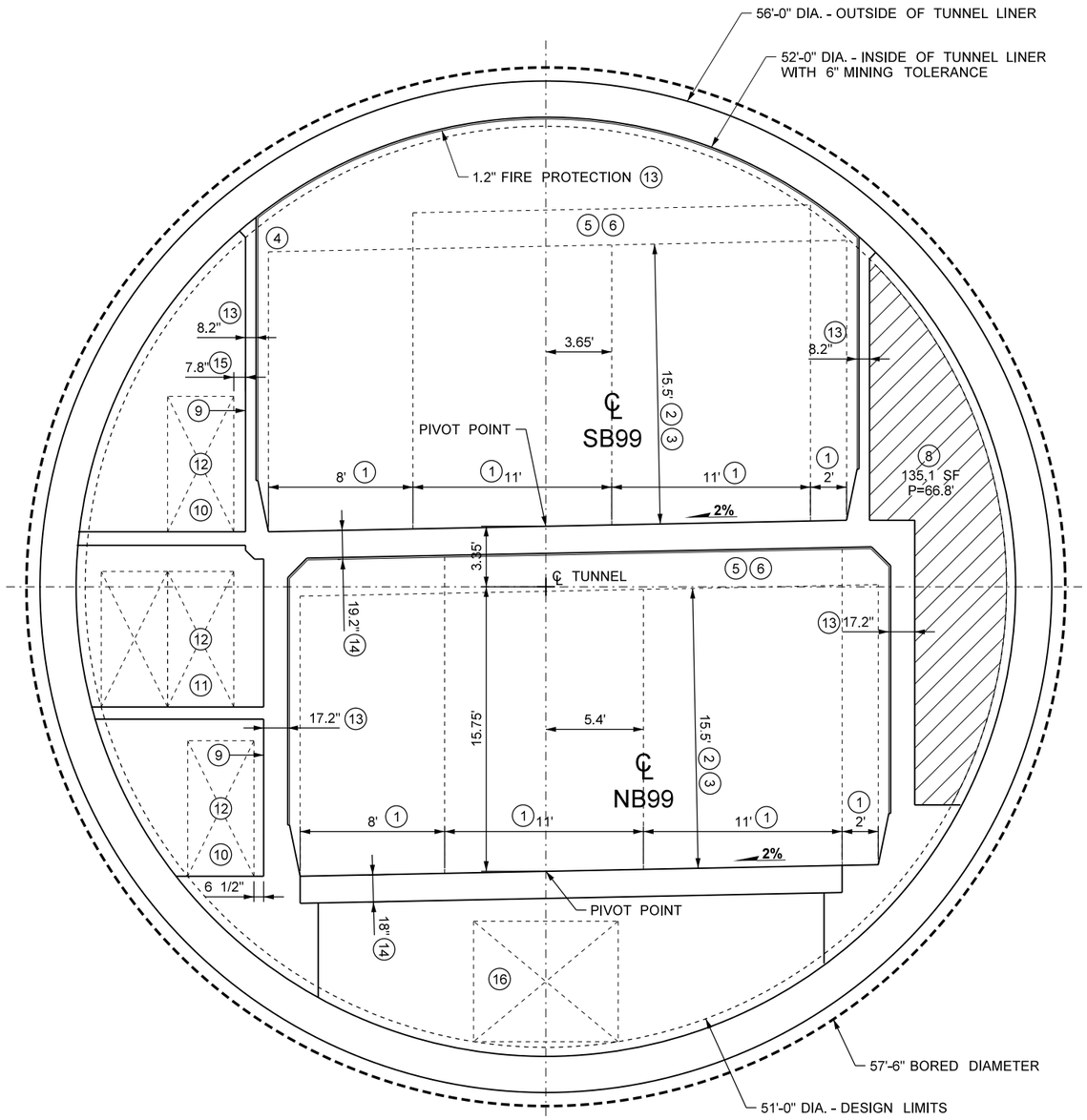

GENERAL NOTES:

1. 11 FT LANE AND 8 FT LEFT AND 2 FT RIGHT SHOULDER WIDTH, FROM ITP 3.3.5 TR 2.11.4.1.1, TABLE 2.11-1.
2. 15.5 FT LANE/TRAVEL WAY VERTICAL CLEARANCE, FROM ITP 3.3.5 TR 2.11.4.1.1, TABLE 2.11-1.
3. 15.5 FT SHOULDER VERTICAL CLEARANCE, ITP 3.3.5 TR 2.11.4.1.1, TABLE 2.11-1.
4. DEVIATION NOT REQUIED. SB LEFT SHOULDER VERTICAL CLEARANCE, TR 2.11.4.1.1, TABLE 2.11-1, AND APPENDIX O4.H1 DESIGN DEVIATION 1 & 2 FIGURE 1.
5. GUIDE SIGNS TR 2.19.4.1.1, TABLE 2.19-1, DRAWING M2 I201 24" SIGN HEIGHT.
6. TCS/LCS SIGNS TR 2.18.4.8.1, 24" MESSAGE BOARD, 18" LETTERS.
7. ITS VMS SIGNS OUTSIDE TUNNEL, TR 2.19.4.1.1
8. EXHAUST AIR-DUCT MINIMUM OF 135 SQ. FT. FREE AREA. TR 2.35.4.2 ITEM 11
9. EGRESS DOOR, WALL MOUNTED, SLIDING TYPE WIDTH 3'-6" TR 2.33.4.7.1.2, TR 2.33.4.8 ADDENDUM 2, WIDTH 44" IN SFD LETTERS APPX Z. 6½" THICKNESS CALCULATED BY ARCHITECTURAL TEAM.
10. EGRESS PROTECTIVE ENCLOSURE, 44 INCHES BY 20 FT. TR 2.33.4.7.1.3
11. EGRESS STAIR, TR 2.33.4.7.1.3
12. EGRESS TRAVEL PATH/PASSAGE CLEARANCE, WIDTH 3'-8", HEIGHT 6'-8", TR 2.33.4.7.1.4
13. WALL THICKNESSES AND FIRE PROTECTION CALCULATED BY STRUCTURAL TEAM
14. ROADWAY SLAB THICKNESSES AND FIRE PROTECTION CALCULATED BY STRUCTURAL TEAM.
15. ELEMENTS EMBEDDED WALL, GREATEST DEPTH IS THE FIRE HOSE VALVE CABINET, DRAWING M2 MP004, MECHANICAL TEAM CALCULATED A 16" DEPTH, 7.8" PROJECTION INTO CORRIDOR.
16. UTILIDOR AND MAINTENANCE ACCESS TRAVEL PATH/ PASSAGE CLEARANCE, WIDTH 8'-0", HEIGHT 6'-8" TR 2.33.4.8 ADDENDUM 2.
17. SEE ELECTRICAL DRAWING EP009 FOR COMBINED SERVICES.

FILE NAME	IP_PWP:dms69908\46055-Txx-14SD100.DLV					
TIME	21-OCT-2010 10:05				REGION NO. 10	STATE WASH
DATE	21-OCT-2010					FED.AID PROJ.NO.
PLOTTED BY	groe				JOB NUMBER	
DESIGNED BY	G. DORN					
ENTERED BY	G. ROE					
CHECKED BY	G. DORN				CONTRACT NO.	LOCATION NO.
PROJ. ENGR.	S. EVERETT					
REGIONAL ADM.	R. PAANANEN	REVISION	DATE	BY		

GERALD L. DORN STATE OF WASHINGTON 21429 STRUCTURAL ENGINEER PROFESSIONAL ENGINEER

RFP DESIGN
SUBMITTED BY
SEATTLE TUNNEL PARTNERS

NOT FOR CONSTRUCTION

Washington State Department of Transportation
U.S. Department of Transportation Federal Highway Administration
City of Seattle

ALASKAN WAY VIADUCT
REPLACEMENT PROJECT
SR 99 BORED TUNNEL
CONTRACT PACKAGE 14

TUNNEL SECTION – DIMENSIONS

SD100

SHEET 135 OF 208 SHEETS

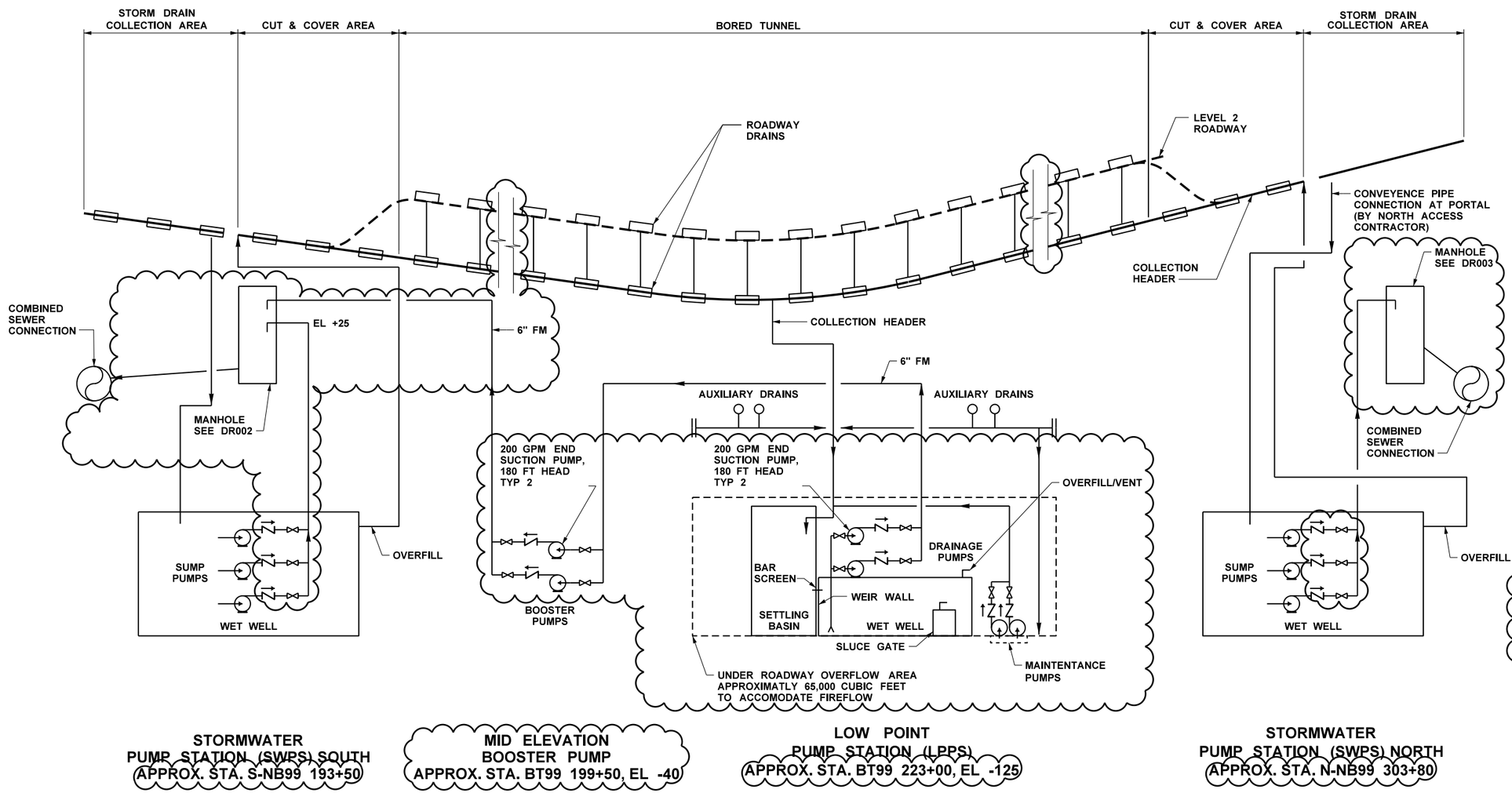

GENERAL NOTES

1. THE TUNNEL AND PORTAL DRAINAGE SYSTEM IS DEFINED IN RFP SECTION 2.37. UTILITY CONNECTIONS AT SURFACE ARE DEFINED IN RFP SECTION 2.14.
2. EFFLUENT TO TUNNEL DRAINAGE IS BASED ON RFP CRITERIA. THE NORTH SWPS AND SOUTH SWPS SHALL COLLECT STORM WATER FROM THE DEPRESSED SECTION OF ROADWAY LEADING TO THE TUNNEL PORTAL AND DISCHARGE TO AN APPROVED LOCATION ACCEPTABLE TO THE CITY OF SEATTLE. CONTRACTOR SHALL CONNECT TO DETENTION FACILITY AT NORTH END AS APPROVED BY THE NORTH ACCESS CONTRACTOR.
3. THE NORTH SWPS AND SOUTH SWPS SHALL HAVE AN OVER-FLOW TO THE TUNNEL COLLECTION HEADER.
4. THE TUNNEL DRAINAGE SYSTEM HAS BOOSTER PUMPS FOR OPTIMUM PUMPING OF WASTEWATER. ALTERNATIVE METHODS SHALL BE ACCEPTABLE IF SHOWN TO ACHIEVE SIMILAR RESULTS AT REDUCED ENERGY CONSUMPTION.
5. THE TUNNEL DRAINAGE SYSTEM HAS AUXILIARY DRAINS FOR ALL ACCUMULATED WATER AND SPRINKLER SYSTEM LOCATIONS. ALTERNATIVE METHODS SHALL BE ACCEPTABLE IF SHOWN TO ACHIEVE SIMILAR RESULTS AND REDUCED PIPING AND MAINTENANCE.
6. THE TUNNEL DRAINAGE SYSTEM SHALL COLLECT WATER FROM THE LOWEST AREA OF THE TUNNEL WITHOUT IMPACT TO THE TUNNEL CONCRETE LINER. MAINTENANCE PUMPS SHALL BE DIAPHRAGM TYPE WITH 1-INCH SUCTION HOSE. ALTERNATIVE METHODS SHALL BE ACCEPTABLE IF SHOWN TO ACHIEVE SIMILAR RESULTS AT REDUCED COST AND MAINTENANCE.
7. THE TUNNEL DRAINAGE SYSTEM SHALL COLLECT WATER FROM ROADWAY AT EACH LEVEL OF TUNNEL. PROVIDE DRAINS AS DEFINED IN RFP.
8. THE TUNNEL DRAINAGE SYSTEM SHALL COLLECT WATER IN THE LPPS. PUMPS SHALL BE LOCATED AT NORTHBOUND ROADWAY LEVEL. ALTERNATE METHODS SHALL BE ACCEPTABLE IF SHOWN TO ACHIEVE SIMILAR RESULTS AT REDUCED COST AND MAINTENANCE.
9. DETENTION FACILITY AND ALL TEMPORARY AND FINAL CONNECTIONS TO CITY OF SEATTLE UTILITIES SHALL BE COORDINATED WITH FINAL APPROVED HYDRAULICS REPORT AND ACCESS CONTRACTORS.

NOTES:
CLOUDED AREAS INDICATE CHANGES MADE TO THE BASIC CONFIGURATION.

FILE NAME	IP_PWP:dms69908\46055-Txx-14SD108.DVL					
TIME	21-OCT-2010 10:05					
DATE	21-OCT-2010					
PLOTTED BY	groe					
DESIGNED BY	A. SHARP					
ENTERED BY	G. ROE					
CHECKED BY	A. SHARP					
PROJ. ENGR.	S. EVERETT					
REGIONAL ADM.	R. PAANANEN	REVISION	DATE	BY		

REGION NO.	STATE	FED.AID PROJ.NO.
10	WASH	
JOB NUMBER		
CONTRACT NO.		LOCATION NO.

AARON SHARP — STATE OF WASHINGTON — 38985 — REGISTERED PROFESSIONAL ENGINEER

RFP DESIGN
SUBMITTED BY
SEATTLE TUNNEL PARTNERS

NOT FOR CONSTRUCTION

Washington State Department of Transportation
U.S. Department of Transportation Federal Highway Administration
City of Seattle

ALASKAN WAY VIADUCT
REPLACEMENT PROJECT
SR 99 BORED TUNNEL
CONTRACT PACKAGE 14

TUNNEL DRAINAGE SCHEMATIC

SD108

SHEET 136 OF 208 SHEETS

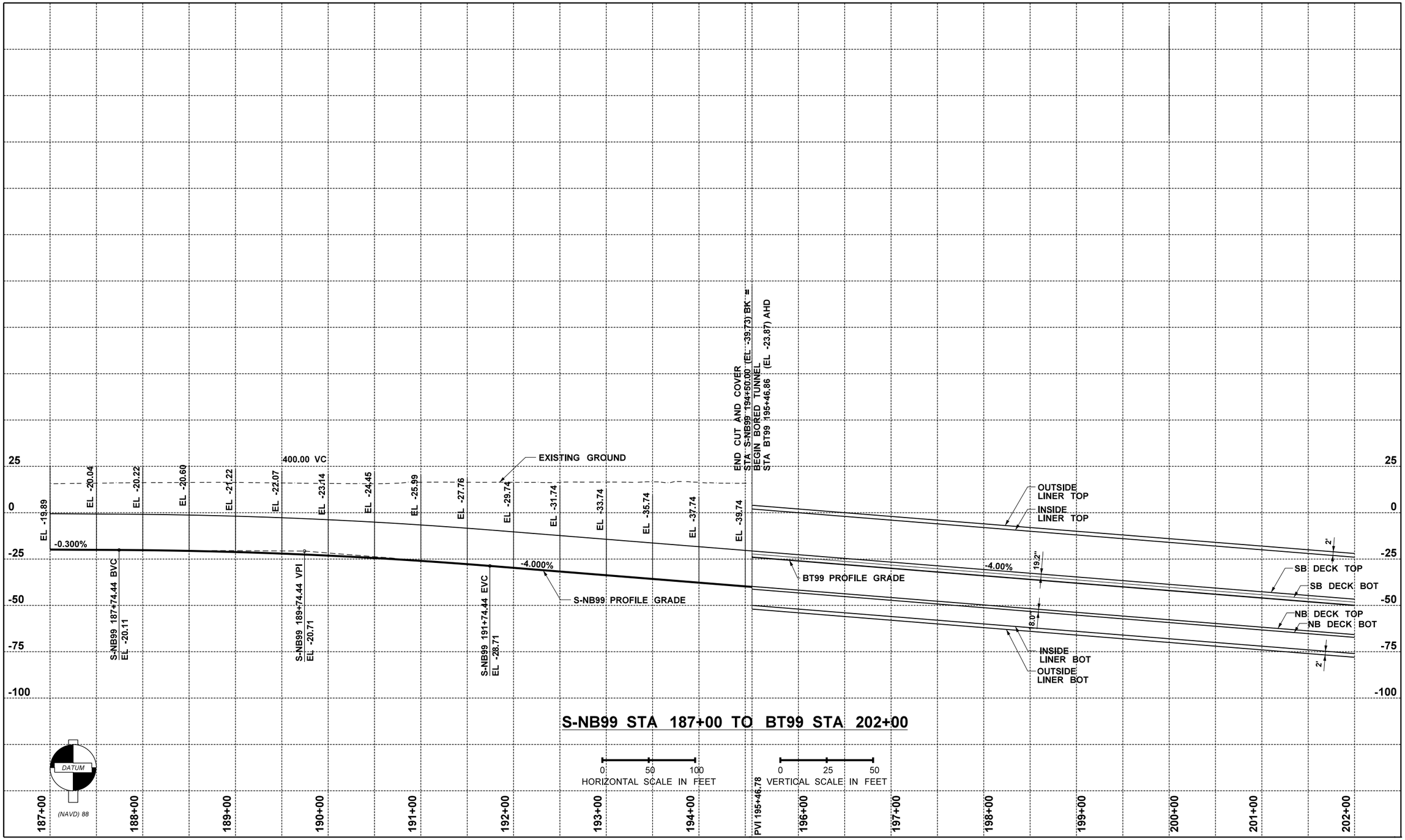

S-NB99 STA 187+00 TO BT99 STA 202+00

FILE NAME	IP_PWP:dms69908\46055-Txx-14SD109.DLV
TIME	21-OCT-2010 10:06
DATE	21-OCT-2010
PLOTTED BY	groe
DESIGNED BY	L. XU
ENTERED BY	R. GREENLEE
CHECKED BY	G. DORN
PROJ. ENGR.	S. EVERETT
REGIONAL ADM.	R. PAANANEN

REVISION	DATE	BY

REGION NO.	STATE	FED.AID PROJ.NO.
10	WASH	
JOB NUMBER		
CONTRACT NO.		LOCATION NO.

GERALD L. DORN — STATE OF WASHINGTON — 21429 — REGISTERED PROFESSIONAL ENGINEER

RFP DESIGN
SUBMITTED BY
SEATTLE TUNNEL PARTNERS

NOT FOR CONSTRUCTION

Washington State Department of Transportation
U.S. Department of Transportation Federal Highway Administration
City of Seattle

ALASKAN WAY VIADUCT
REPLACEMENT PROJECT
SR 99 BORED TUNNEL
CONTRACT PACKAGE 04

TUNNEL STRUCTURES PROFILE

SD109

SHEET 137 OF 208 SHEETS

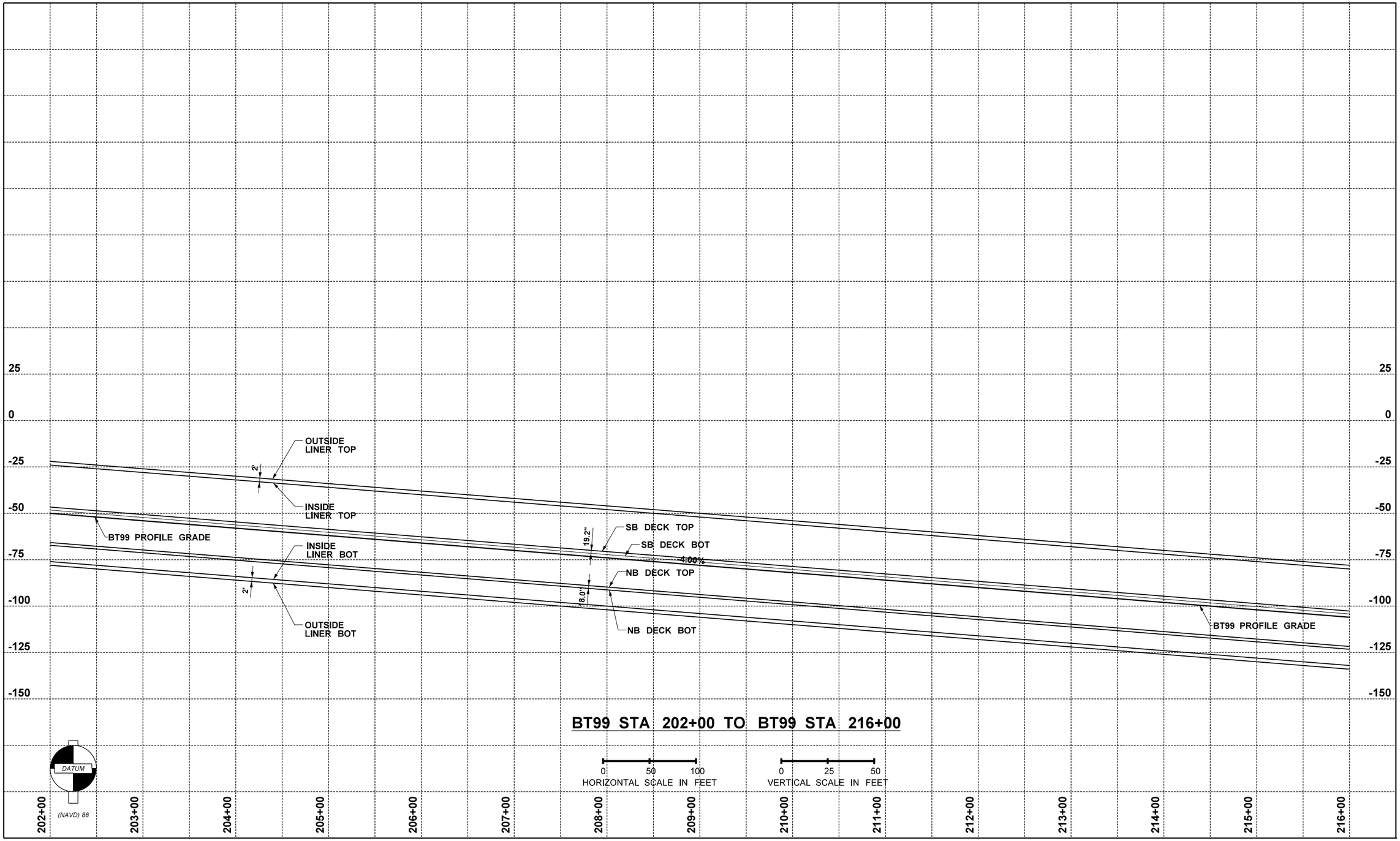

BT99 STA 202+00 TO BT99 STA 216+00

FILE NAME	IP_PWP:dms69908\46055-Txx-14SD110.DLV
TIME	21-OCT-2010 10:06
DATE	21-OCT-2010
PLOTTED BY	groe
DESIGNED BY	L. XU
ENTERED BY	R. GREENLEE
CHECKED BY	G. DORN
PROJ. ENGR.	S. EVERETT
REGIONAL ADM.	R. PAANANEN

REVISION	DATE	BY

REGION NO.	STATE	FED.AID PROJ.NO.
10	WASH	
JOB NUMBER		
CONTRACT NO.		LOCATION NO.

GERALD L. DORN — STATE OF WASHINGTON — 21429 — STRUCTURAL ENGINEER — PROFESSIONAL ENGINEER

RFP DESIGN
SUBMITTED BY
SEATTLE TUNNEL PARTNERS

NOT FOR CONSTRUCTION

Washington State Department of Transportation
U.S. Department of Transportation Federal Highway Administration
City of Seattle

ALASKAN WAY VIADUCT
REPLACEMENT PROJECT
SR 99 BORED TUNNEL
CONTRACT PACKAGE 04

TUNNEL STRUCTURES PROFILE

SD110

SHEET 138 OF 208 SHEETS

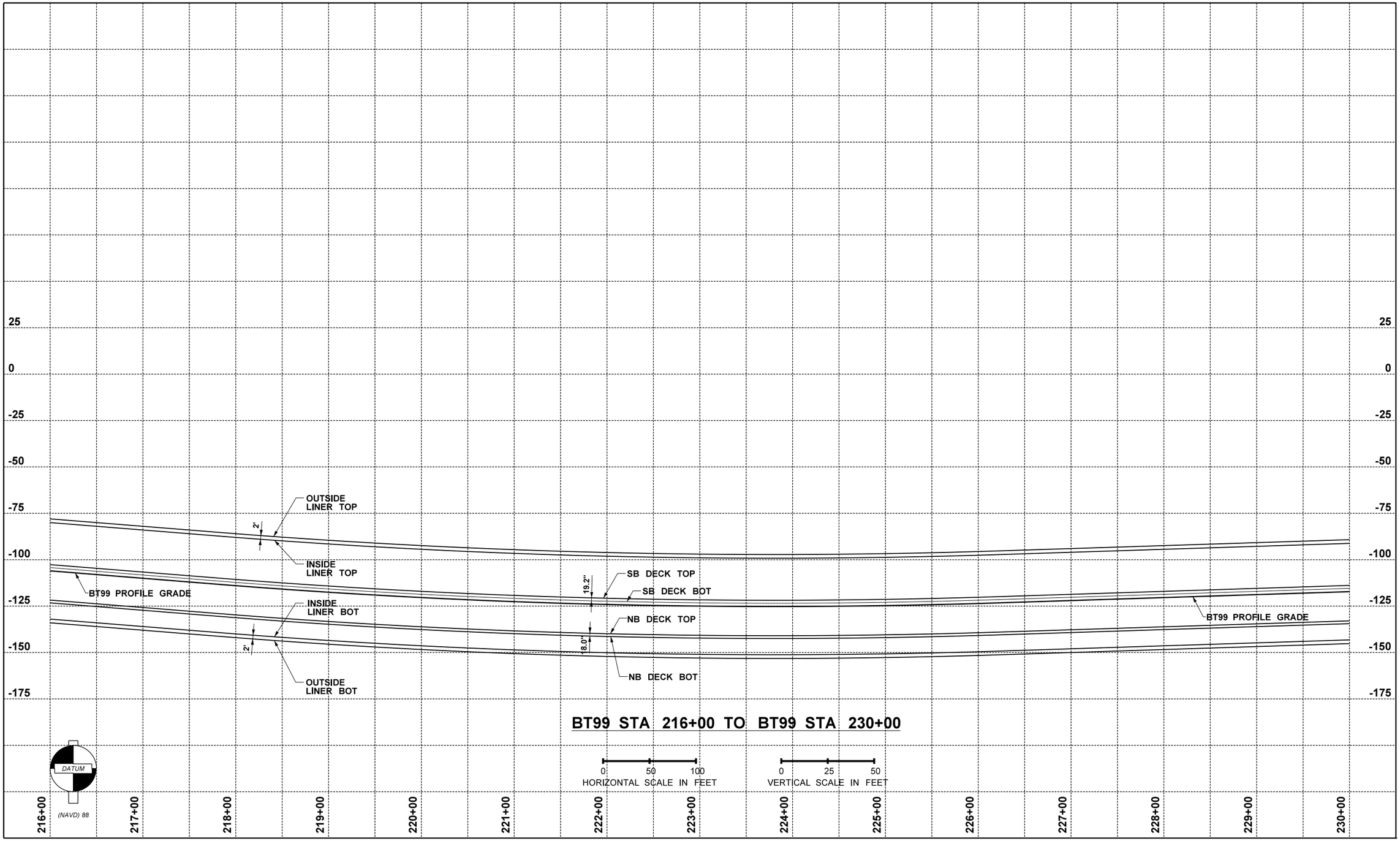

FILE NAME	IP_PWP:dms69908\46055-Txx-14SD111.DLV
TIME	21-OCT-2010 10:06
DATE	21-OCT-2010
PLOTTED BY	groe
DESIGNED BY	L. XU
ENTERED BY	R. GREENLEE
CHECKED BY	G. DORN
PROJ. ENGR.	S. EVERETT
REGIONAL ADM.	R. PAANANEN

REVISION	DATE	BY

REGION NO.	STATE	FED.AID PROJ.NO.
10	WASH	
JOB NUMBER		
CONTRACT NO.		LOCATION NO.

GERALD L. DORN — STATE OF WASHINGTON — 21429 — REGISTERED PROFESSIONAL ENGINEER

RFP DESIGN

SUBMITTED BY
SEATTLE TUNNEL PARTNERS

NOT FOR CONSTRUCTION

Washington State Department of Transportation

U.S. Department of Transportation Federal Highway Administration

City of Seattle

ALASKAN WAY VIADUCT
REPLACEMENT PROJECT
SR 99 BORED TUNNEL
CONTRACT PACKAGE 04

TUNNEL STRUCTURES PROFILE

SD111

SHEET 139 OF 208 SHEETS

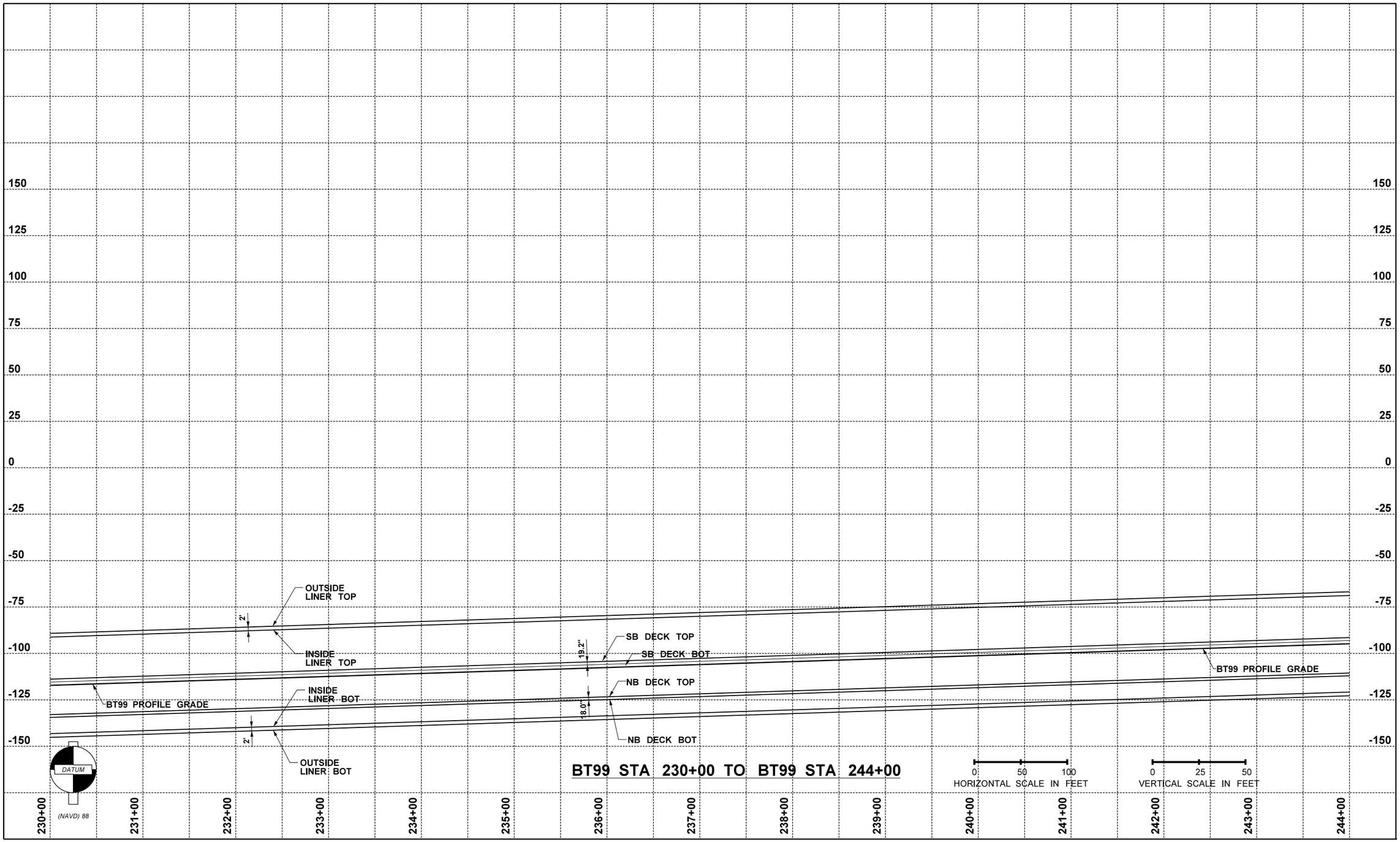

FILE NAME	IP_PWP:dms69908\46055-Txx-14SD112.DLV
TIME	21-OCT-2010 10:06
DATE	21-OCT-2010
PLOTTED BY	groe
DESIGNED BY	L. XU
ENTERED BY	R. GREENLEE
CHECKED BY	G. DORN
PROJ. ENGR.	S. EVERETT
REGIONAL ADM.	R. PAANANEN

REVISION	DATE	BY

REGION NO.	STATE	FED.AID PROJ.NO.
10	WASH	
JOB NUMBER		
CONTRACT NO.		LOCATION NO.

GERALD L. DORN — STATE OF WASHINGTON — 21429 — REGISTERED PROFESSIONAL ENGINEER

RFP DESIGN

SUBMITTED BY
SEATTLE TUNNEL PARTNERS

NOT FOR CONSTRUCTION

Washington State Department of Transportation

U.S. Department of Transportation
Federal Highway Administration

City of Seattle

ALASKAN WAY VIADUCT
REPLACEMENT PROJECT
SR 99 BORED TUNNEL
CONTRACT PACKAGE 04

TUNNEL STRUCTURES PROFILE

SD112

SHEET 140 OF 208 SHEETS

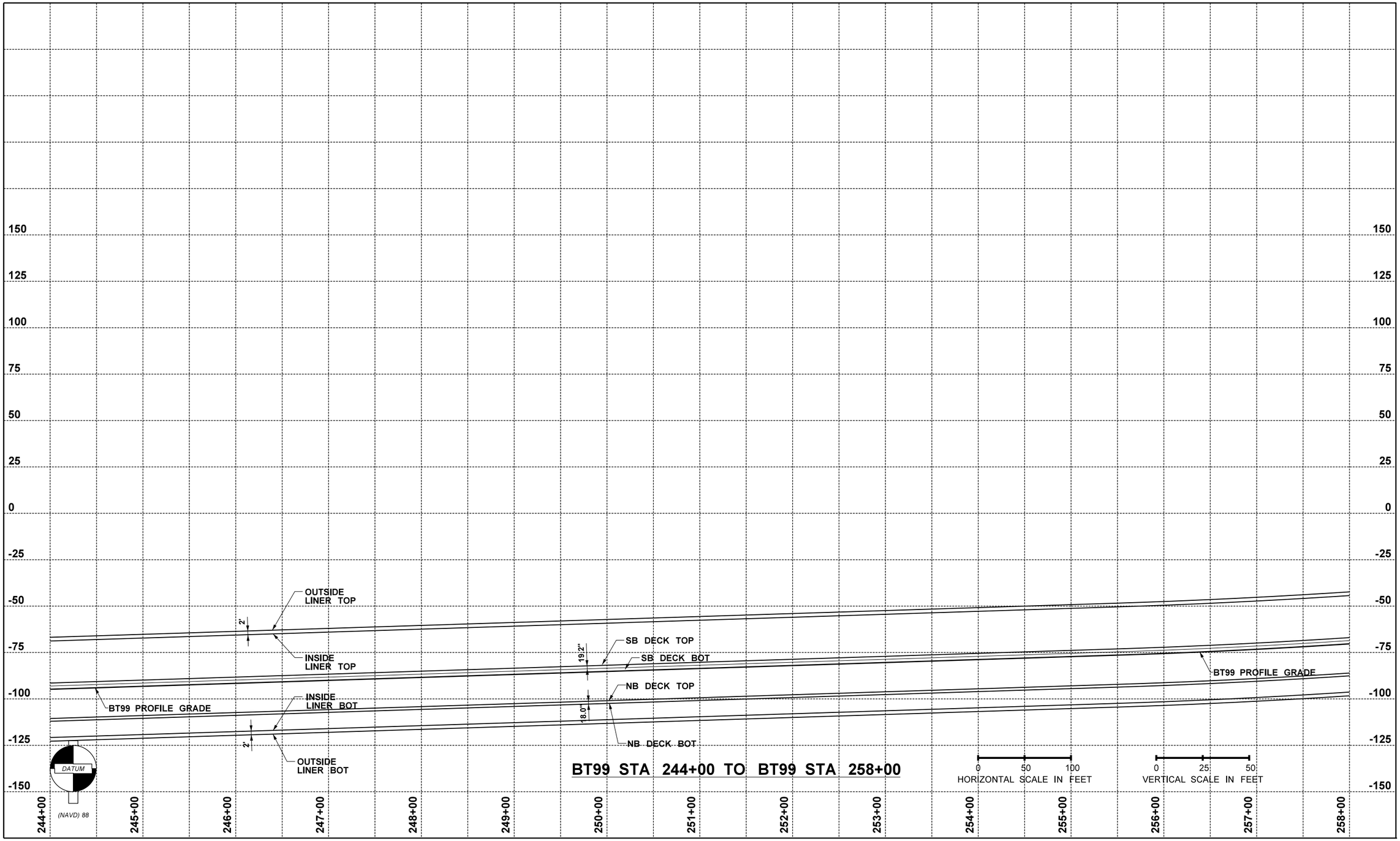

BT99 STA 244+00 TO BT99 STA 258+00

FILE NAME	IP_PWP:dms69908\46055-Txx-14SD113.DLV
TIME	21-OCT-2010 10:07
DATE	21-OCT-2010
PLOTTED BY	groe
DESIGNED BY	L. XU
ENTERED BY	R. GREENLEE
CHECKED BY	G. DORN
PROJ. ENGR.	S. EVERETT
REGIONAL ADM.	R. PAANANEN

REVISION	DATE	BY

REGION NO.	STATE	FED.AID PROJ.NO.
10	WASH	
JOB NUMBER		
CONTRACT NO.		LOCATION NO.

GERALD L. DORN — STATE OF WASHINGTON — 21429 — REGISTERED PROFESSIONAL ENGINEER

RFP DESIGN

SUBMITTED BY
SEATTLE TUNNEL PARTNERS

NOT FOR CONSTRUCTION

Washington State Department of Transportation

U.S. Department of Transportation
Federal Highway Administration

City of Seattle

ALASKAN WAY VIADUCT REPLACEMENT PROJECT
SR 99 BORED TUNNEL
CONTRACT PACKAGE 04

TUNNEL STRUCTURES PROFILE

SD113

SHEET 141 OF 208 SHEETS

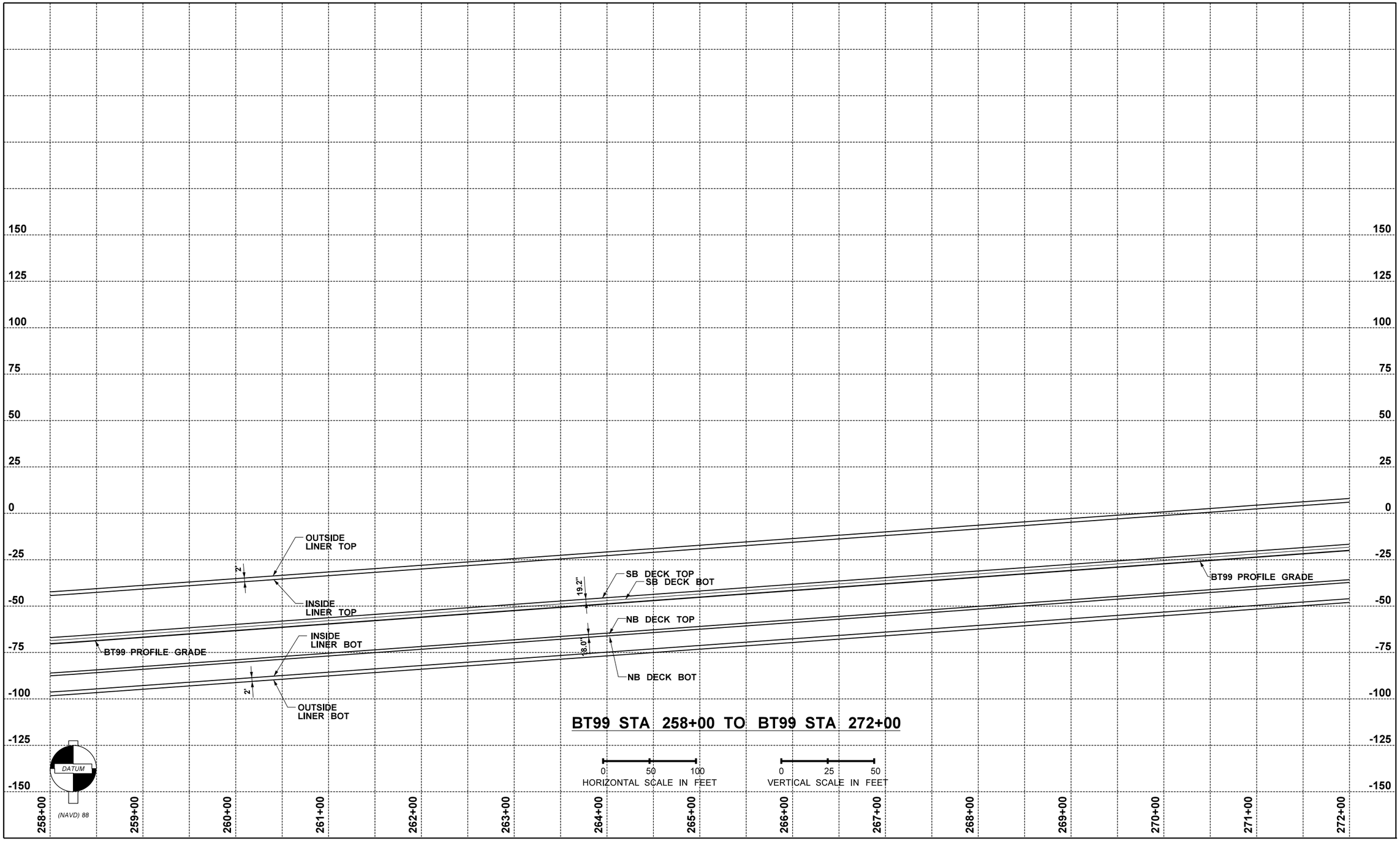

FILE NAME	IP_PWP:dms69908\46055-Txx-14SD114.DLV
TIME	21-OCT-2010 10:07
DATE	21-OCT-2010
PLOTTED BY	groe
DESIGNED BY	L. XU
ENTERED BY	R. GREENLEE
CHECKED BY	G. DORN
PROJ. ENGR.	S. EVERETT
REGIONAL ADM.	R. PAANANEN

REVISION	DATE	BY

REGION NO.	STATE	FED.AID PROJ.NO.
10	WASH	
JOB NUMBER		
CONTRACT NO.		LOCATION NO.

GERALD L. DORN — STATE OF WASHINGTON — 21429 — REGISTERED PROFESSIONAL ENGINEER

RFP DESIGN

SUBMITTED BY
SEATTLE TUNNEL PARTNERS

NOT FOR CONSTRUCTION

Washington State Department of Transportation

U.S. Department of Transportation Federal Highway Administration

City of Seattle

ALASKAN WAY VIADUCT
REPLACEMENT PROJECT
SR 99 BORED TUNNEL
CONTRACT PACKAGE 04

TUNNEL STRUCTURES PROFILE

SD114

SHEET 142 OF 208 SHEETS

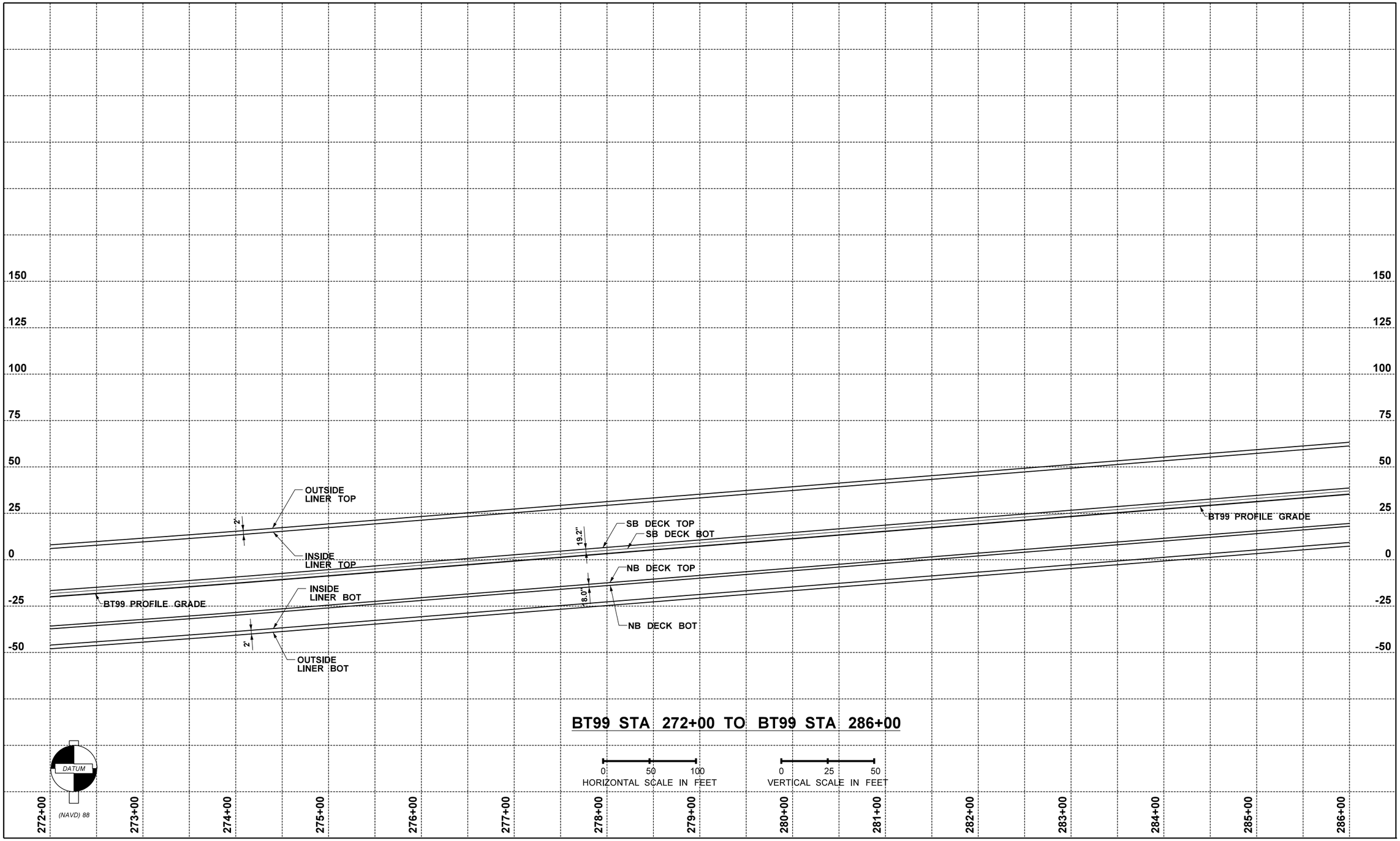

FILE NAME	IP_PWP:dms69908\46055-Txx-14SD115.DLV
TIME	21-OCT-2010 10:07
DATE	21-OCT-2010
PLOTTED BY	groe
DESIGNED BY	L. XU
ENTERED BY	R. GREENLEE
CHECKED BY	G. DORN
PROJ. ENGR.	S. EVERETT
REGIONAL ADM.	R. PAANANEN

REVISION	DATE	BY

REGION NO.	STATE	FED.AID PROJ.NO.
10	WASH	
JOB NUMBER		
CONTRACT NO.		LOCATION NO.

GERALD L. DORN — STATE OF WASHINGTON — 21429 — STRUCTURAL ENGINEER — PROFESSIONAL ENGINEER

RFP DESIGN

SUBMITTED BY
SEATTLE TUNNEL PARTNERS

NOT FOR CONSTRUCTION

Washington State Department of Transportation

U.S. Department of Transportation Federal Highway Administration

City of Seattle

ALASKAN WAY VIADUCT
REPLACEMENT PROJECT
SR 99 BORED TUNNEL
CONTRACT PACKAGE 04

TUNNEL STRUCTURES PROFILE

SD115

SHEET 143 OF 208 SHEETS

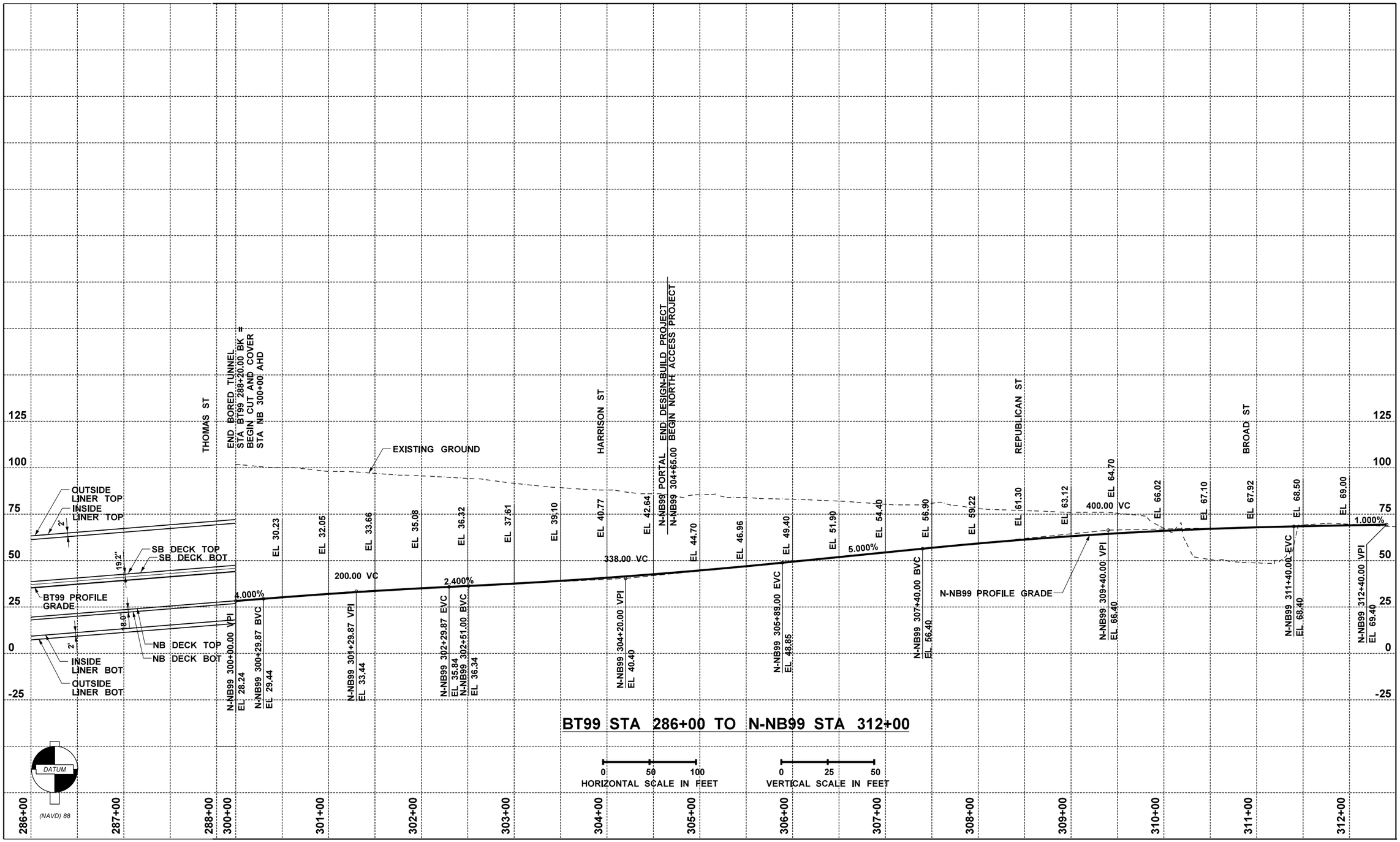

FILE NAME	IP_PWP:dms69908\46055-Txx-14SD116.DLV				REGION NO. 10	STATE WASH	FED.AID PROJ.NO.
TIME	21-OCT-2010 10:07				JOB NUMBER		
DATE	21-OCT-2010						
PLOTTED BY	groe						
DESIGNED BY	L. XU				CONTRACT NO.		LOCATION NO.
ENTERED BY	R. GREENLEE						
CHECKED BY	G. DORN						
PROJ. ENGR.	S. EVERETT						
REGIONAL ADM.	R. PAANANEN	REVISION	DATE	BY			

GERALD L. DORN — STATE OF WASHINGTON — 21429 — STRUCTURAL ENGINEER — PROFESSIONAL ENGINEER

RFP DESIGN

SUBMITTED BY
SEATTLE TUNNEL PARTNERS

NOT FOR CONSTRUCTION

Washington State Department of Transportation

U.S. Department of Transportation
Federal Highway Administration

City of Seattle

ALASKAN WAY VIADUCT
REPLACEMENT PROJECT
SR 99 BORED TUNNEL
CONTRACT PACKAGE 04

TUNNEL STRUCTURES PROFILE

SD116

SHEET 144 OF 208 SHEETS

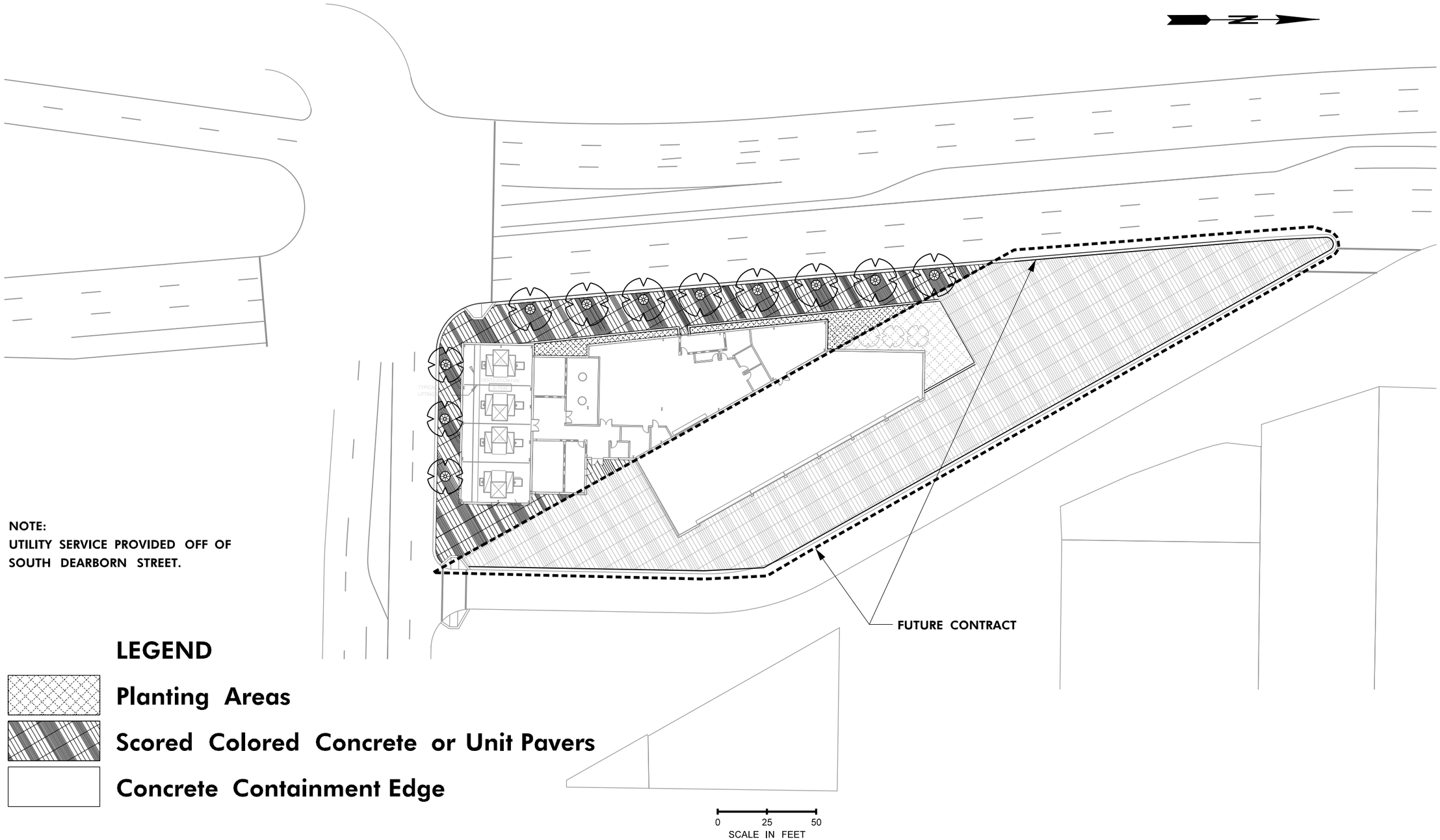

NOTE:
UTILITY SERVICE PROVIDED OFF OF SOUTH DEARBORN STREET.

LEGEND

- Planting Areas
- Scored Colored Concrete or Unit Pavers
- Concrete Containment Edge

FILE NAME	IP_PWP:dms69909\46055-Sxx-14AS100_OptM.DLV					
TIME	25-OCT-2010 13:38					
DATE	25-OCT-2010					
PLOTTED BY	groe					
DESIGNED BY	W. HUI					
ENTERED BY	W. HUI					
CHECKED BY	T. BULFIN					
PROJ. ENGR.	S. EVERETT					
REGIONAL ADM.	R. PAANANEN	REVISION	DATE	BY		

REGION NO.	STATE	FED.AID PROJ.NO.
10	WASH	
JOB NUMBER		
CONTRACT NO.		LOCATION NO.

4367 REGISTERED ARCHITECT
TERRENCE W. BULFIN
STATE OF WASHINGTON
EXPIRES 1/6/

RFP DESIGN
SUBMITTED BY
SEATTLE TUNNEL PARTNERS

NOT FOR CONSTRUCTION

Washington State Department of Transportation
U.S. Department of Transportation Federal Highway Administration
City of Seattle

ALASKAN WAY VIADUCT
REPLACEMENT PROJECT
SR 99 BORED TUNNEL
CONTRACT PACKAGE 14

SOUTH: SITE PLAN

AS100

SHEET 145 OF 208 SHEETS

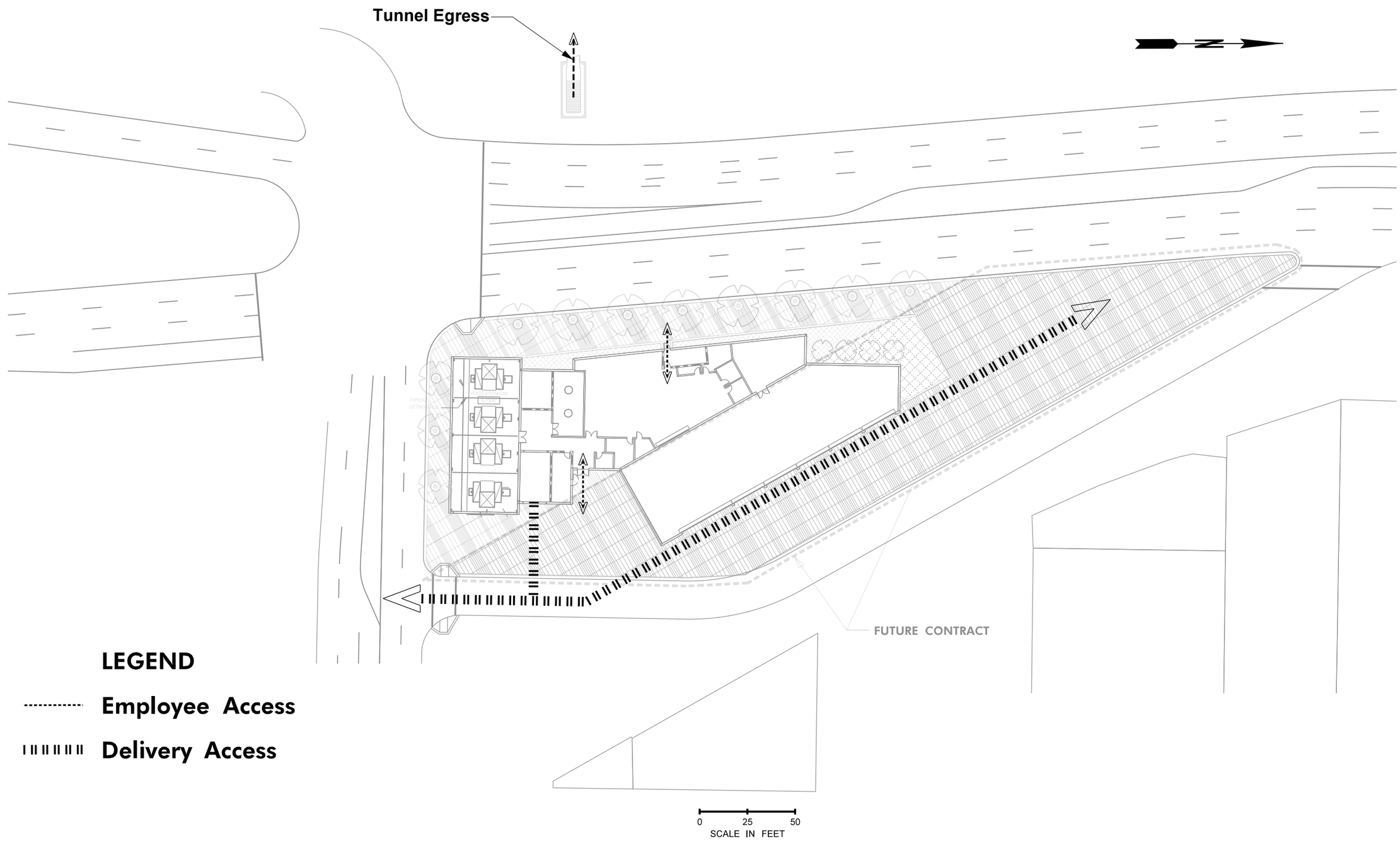

LEGEND

Employee Access

Delivery Access

FILE NAME	IP_PWP:dms69909\46055-Sxx-14AS101_OptM.DLV				REGION NO.	STATE	FED.AID PROJ.NO.
TIME	22-OCT-2010 06:13				10	WASH	
DATE	22-OCT-2010				JOB NUMBER		
PLOTTED BY	groe						
DESIGNED BY	W. HUI						
ENTERED BY	W. HUI				CONTRACT NO.		LOCATION NO.
CHECKED BY	T. BULFIN						
PROJ. ENGR.	S. EVERETT						
REGIONAL ADM.	R. PAANANEN	REVISION	DATE	BY			

4367 REGISTERED ARCHITECT
TERRENCE W. BULFIN
STATE OF WASHINGTON
EXPIRES 1/6/

RFP DESIGN
SUBMITTED BY
SEATTLE TUNNEL PARTNERS

NOT FOR CONSTRUCTION

Washington State Department of Transportation
U.S. Department of Transportation Federal Highway Administration
City of Seattle

ALASKAN WAY VIADUCT
REPLACEMENT PROJECT
SR 99 BORED TUNNEL
CONTRACT PACKAGE 14

SOUTH: SITE PLAN
CIRCULATION DIAGRAM

AS101

SHEET 146 OF 208 SHEETS

FILE NAME	IP_PWP:dms69909\46055-Sxx-14AS102_OptM.DLV			
TIME	22-OCT-2010 06:13			
DATE	22-OCT-2010			
PLOTTED BY	groe			
DESIGNED BY	E. CHANG			
ENTERED BY	E. CHANG			
CHECKED BY	T. BULFIN			
PROJ. ENGR.	S. EVERETT	ADDED NOTE		BPR
REGIONAL ADM.	R. PAANANEN	REVISION	DATE	BY

REGION NO.	STATE	FED.AID PROJ.NO.
10	WASH	
JOB NUMBER		
CONTRACT NO.		LOCATION NO.

4367 REGISTERED ARCHITECT
TERRENCE W. BULFIN
STATE OF WASHINGTON
EXPIRES 1/6/

RFP DESIGN
SUBMITTED BY
SEATTLE TUNNEL PARTNERS

NOT FOR CONSTRUCTION

Washington State Department of Transportation
U.S. Department of Transportation Federal Highway Administration
City of Seattle

ALASKAN WAY VIADUCT
REPLACEMENT PROJECT
SR 99 BORED TUNNEL
CONTRACT PACKAGE 14

PERSPECTIVE: SOUTH BUILDING

AS102

SHEET 147 OF 208 SHEETS

FILE NAME	IP_PWP:dms69909\46055-Sxx-14AS103_OptM.DLV						
TIME	22-OCT-2010 06:14				REGION NO.	STATE	FED.AID PROJ.NO.
DATE	22-OCT-2010				10	WASH	
PLOTTED BY	groe				JOB NUMBER		
DESIGNED BY	E. CHANG						
ENTERED BY	E. CHANG						
CHECKED BY	T. BULFIN				CONTRACT NO.		LOCATION NO.
PROJ. ENGR.	S. EVERETT	ADDED NOTE		BPR			
REGIONAL ADM.	R. PAANANEN	REVISION	DATE	BY			

4367 REGISTERED ARCHITECT
TERRENCE W. BULFIN
STATE OF WASHINGTON
EXPIRES 1/6/

RFP DESIGN
SUBMITTED BY
SEATTLE TUNNEL PARTNERS

NOT FOR CONSTRUCTION

Washington State Department of Transportation
U.S. Department of Transportation Federal Highway Administration
City of Seattle

ALASKAN WAY VIADUCT
REPLACEMENT PROJECT
SR 99 BORED TUNNEL
CONTRACT PACKAGE 14

PERSPECTIVE: SOUTH BUILDING

AS103

SHEET 148 OF 208 SHEETS

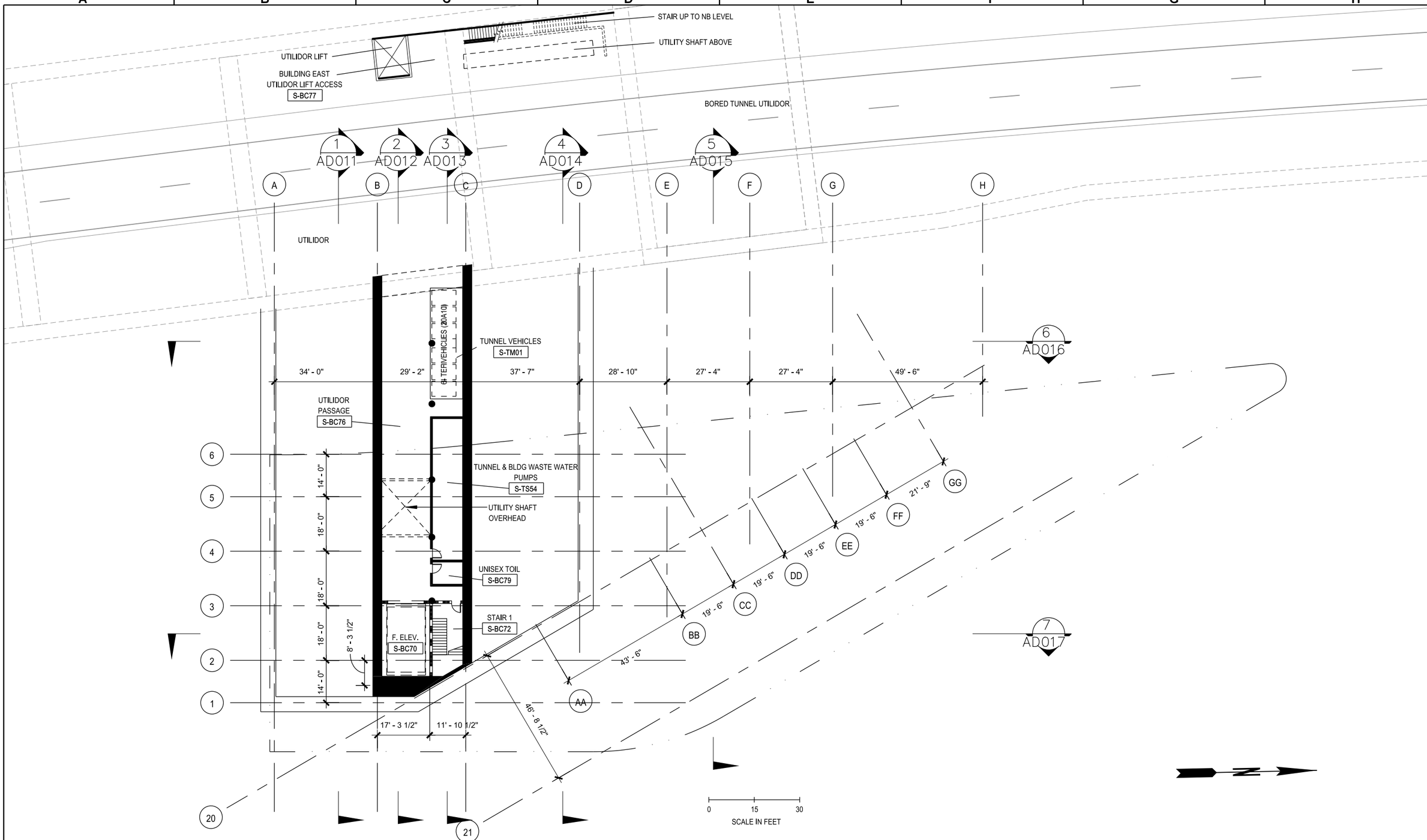

FILE NAME	IP_PWP:dms69909\46055-Sxx-14FP101_OptM.DLV
TIME	22-OCT-2010 06:14
DATE	22-OCT-2010
PLOTTED BY	groe
DESIGNED BY	T. BULFIN
ENTERED BY	W. HUI
CHECKED BY	T. BULFIN
PROJ. ENGR.	S. EVERETT
REGIONAL ADM.	R. PAANANEN

REVISION	DATE	BY

REGION NO.	STATE	FED.AID PROJ.NO.
10	WASH	
JOB NUMBER		
CONTRACT NO.		LOCATION NO.

4367 REGISTERED ARCHITECT
TERRENCE W. BULFIN
STATE OF WASHINGTON
EXPIRES 1/6/

RFP DESIGN
SUBMITTED BY
SEATTLE TUNNEL PARTNERS

NOT FOR CONSTRUCTION

Washington State Department of Transportation
U.S. Department of Transportation Federal Highway Administration
City of Seattle

ALASKAN WAY VIADUCT
REPLACEMENT PROJECT
SR 99 BORED TUNNEL
CONTRACT PACKAGE 14

SOUTH: FLOOR PLAN LEVEL –4

FP101

SHEET 149 OF 208 SHEETS

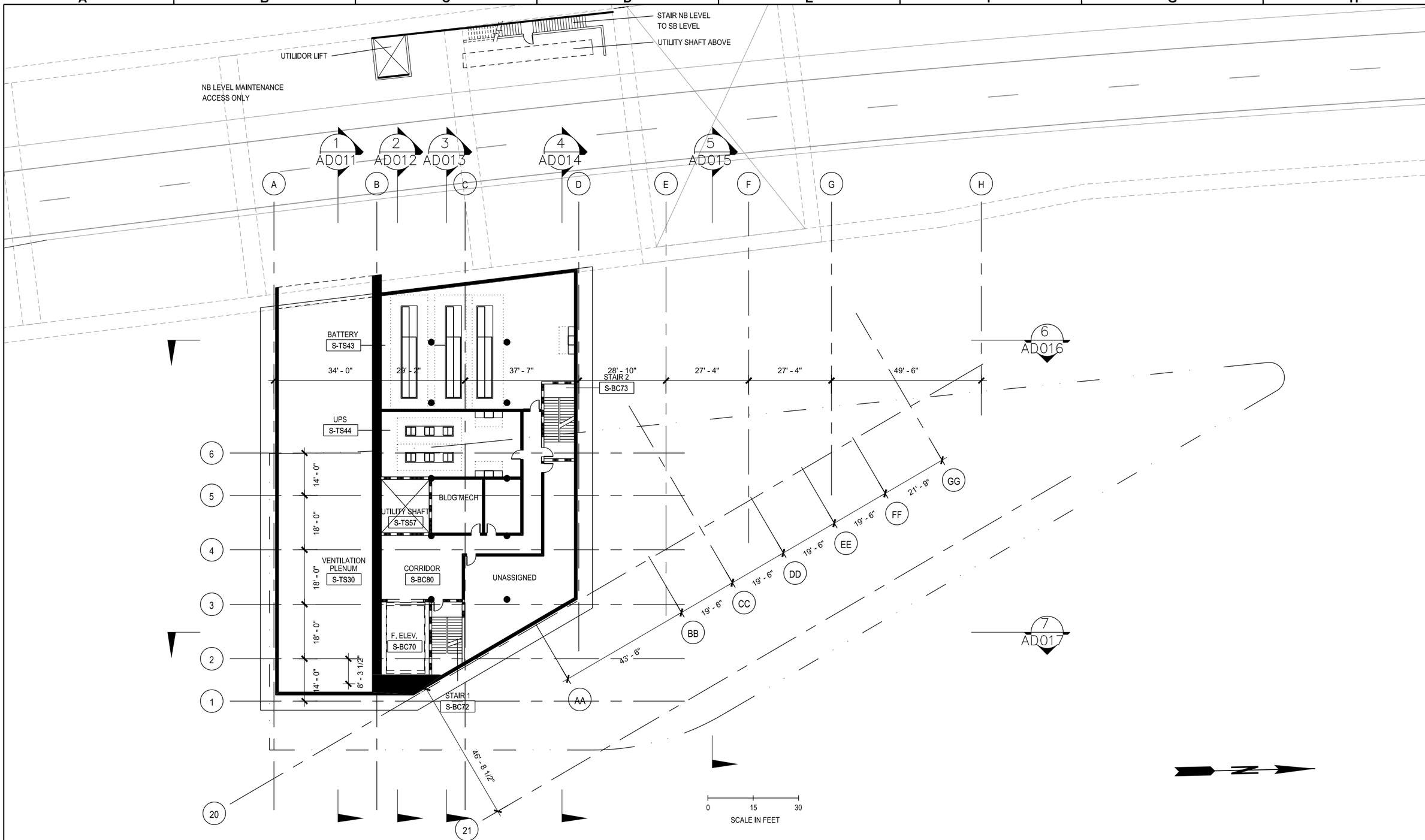

FILE NAME	IP_PWP:dms69909\46055-Sxx-14FP102_OptM.DLV				REGION NO. 10	STATE WASH	FED.AID PROJ.NO.
TIME	22-OCT-2010 06:15				JOB NUMBER	
DATE	22-OCT-2010					
PLOTTED BY	groe					
DESIGNED BY	T. BULFIN					
ENTERED BY	W. HUI					
CHECKED BY	T. BULFIN				CONTRACT NO.	LOCATION NO.
PROJ. ENGR.	S. EVERETT					
REGIONAL ADM.	R. PAANANEN	REVISION	DATE	BY		

4367 REGISTERED ARCHITECT
TERRENCE W. BULFIN
STATE OF WASHINGTON
EXPIRES 1/6/

RFP DESIGN
SUBMITTED BY
SEATTLE TUNNEL PARTNERS

NOT FOR CONSTRUCTION

Washington State Department of Transportation
U.S. Department of Transportation Federal Highway Administration
City of Seattle

ALASKAN WAY VIADUCT
REPLACEMENT PROJECT
SR 99 BORED TUNNEL
CONTRACT PACKAGE 14

SOUTH: FLOOR PLAN LEVEL –3

FP102

SHEET 150 OF 208 SHEETS

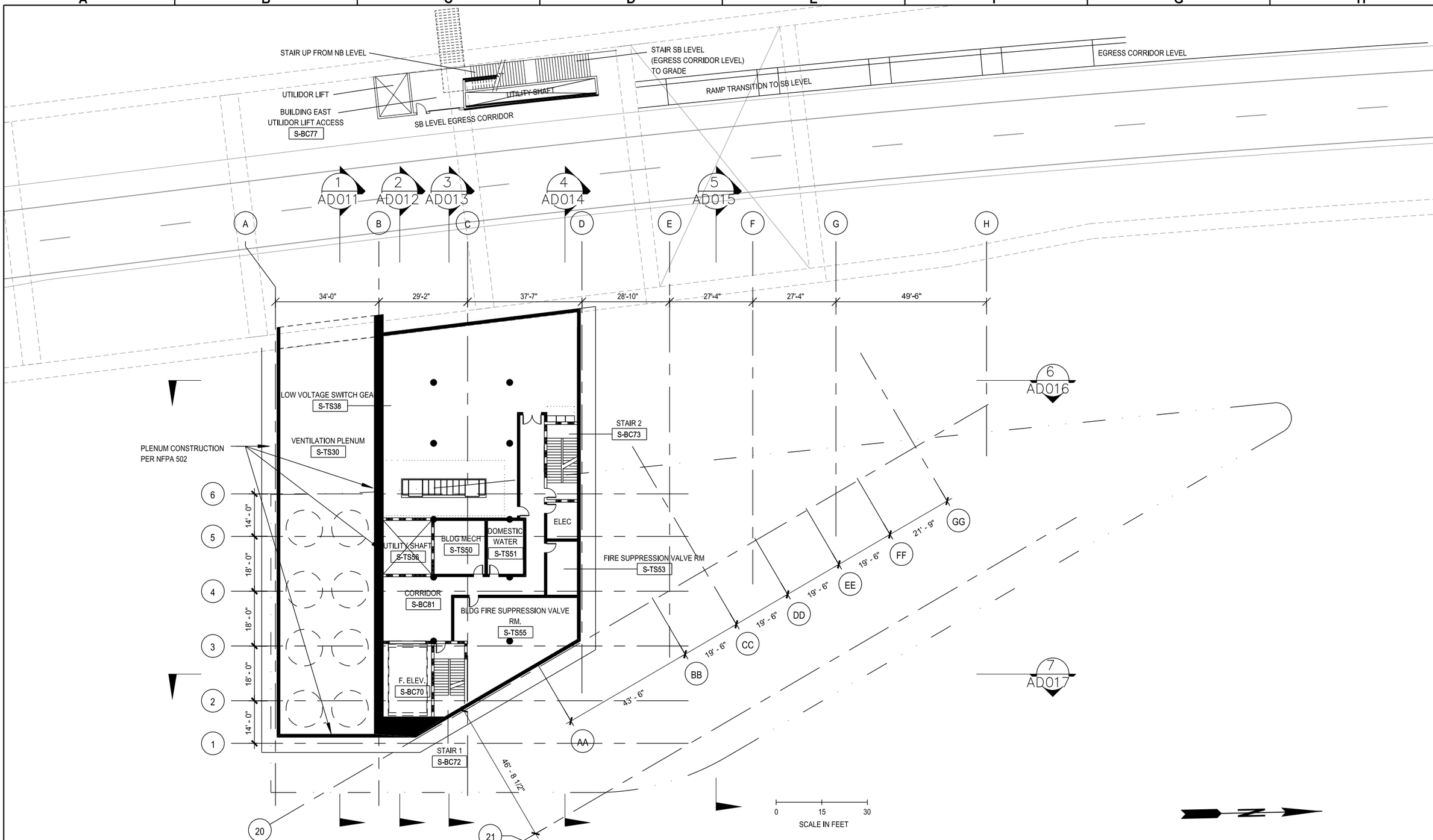

FILE NAME	IP_PWP:dms69909\46055-Sxx-14FP103_OptM.DLV					
TIME	22-OCT-2010 06:15					
DATE	22-OCT-2010					
PLOTTED BY	groe					
DESIGNED BY	T. BULFIN					
ENTERED BY	W. HUI					
CHECKED BY	T. BULFIN					
PROJ. ENGR.	S. EVERETT					
REGIONAL ADM.	R. PAANANEN	REVISION	DATE	BY		

REGION NO.	STATE	FED.AID PROJ.NO.
10	WASH	
JOB NUMBER		
CONTRACT NO.		LOCATION NO.

4367 REGISTERED ARCHITECT
TERRENCE W. BULFIN
STATE OF WASHINGTON
EXPIRES 1/6/

RFP DESIGN
SUBMITTED BY
SEATTLE TUNNEL PARTNERS

NOT FOR CONSTRUCTION

Washington State Department of Transportation
U.S. Department of Transportation Federal Highway Administration
City of Seattle

ALASKAN WAY VIADUCT
REPLACEMENT PROJECT
SR 99 BORED TUNNEL
CONTRACT PACKAGE 14

SOUTH: FLOOR PLAN LEVEL –2

FP103

SHEET 151 OF 208 SHEETS

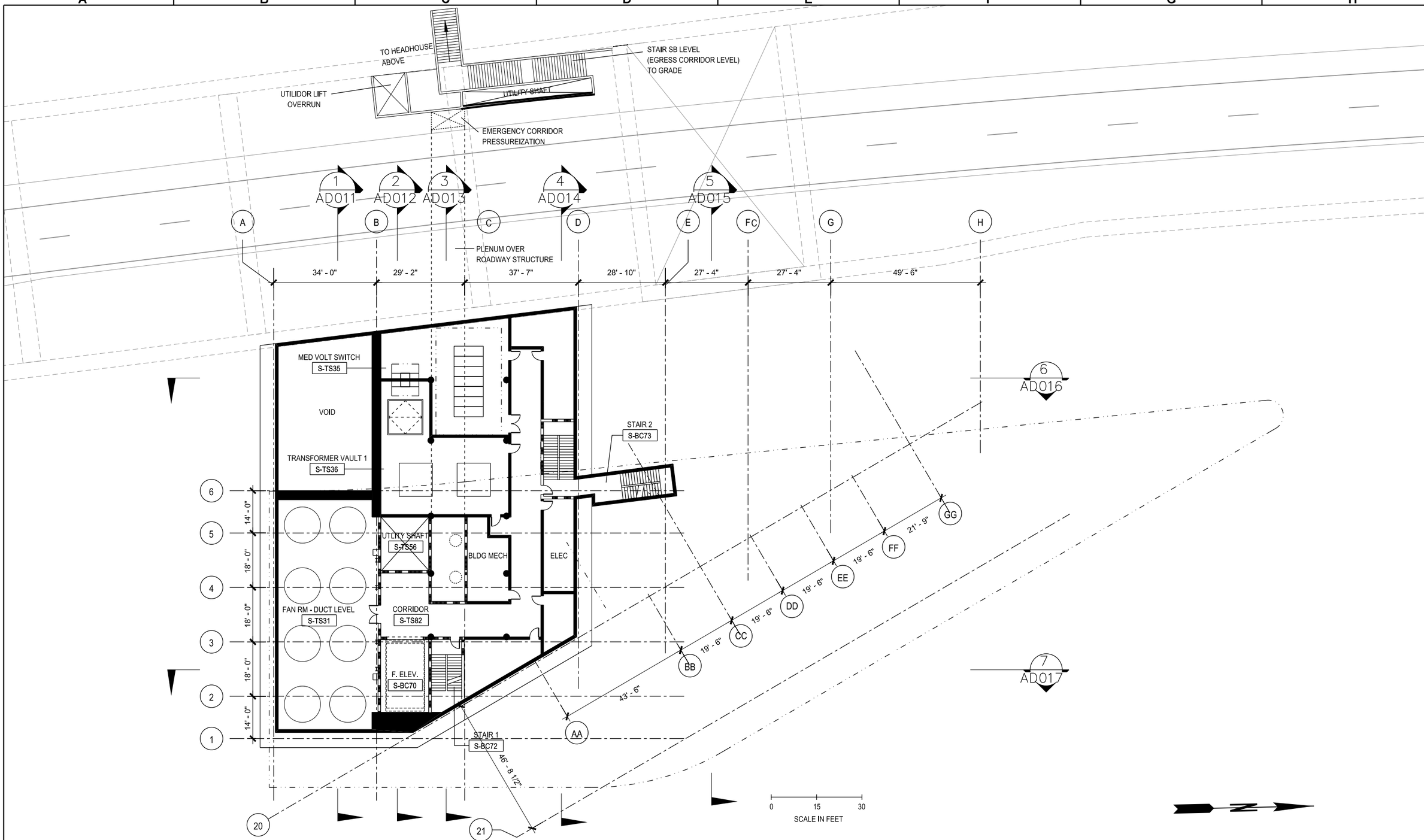

FILE NAME	IP_PWP:dms69909\46055-Sxx-14FP104_OptM.DLV				REGION NO.	STATE	FED.AID PROJ.NO.
TIME	22-OCT-2010 06:15				10	WASH	
DATE	22-OCT-2010				JOB NUMBER		
PLOTTED BY	groe						
DESIGNED BY	T. BULFIN						
ENTERED BY	W. HUI						
CHECKED BY	T. BULFIN				CONTRACT NO.		LOCATION NO.
PROJ. ENGR.	S. EVERETT						
REGIONAL ADM.	R. PAANANEN	REVISION	DATE	BY			

4367 REGISTERED ARCHITECT
TERRENCE W. BULFIN
STATE OF WASHINGTON
EXPIRES 1/6/

RFP DESIGN
SUBMITTED BY
SEATTLE TUNNEL PARTNERS

NOT FOR CONSTRUCTION

Washington State Department of Transportation
U.S. Department of Transportation Federal Highway Administration
City of Seattle

ALASKAN WAY VIADUCT
REPLACEMENT PROJECT
SR 99 BORED TUNNEL
CONTRACT PACKAGE 14

SOUTH: FLOOR PLAN LEVEL –1

FP104

SHEET 152 OF 208 SHEETS

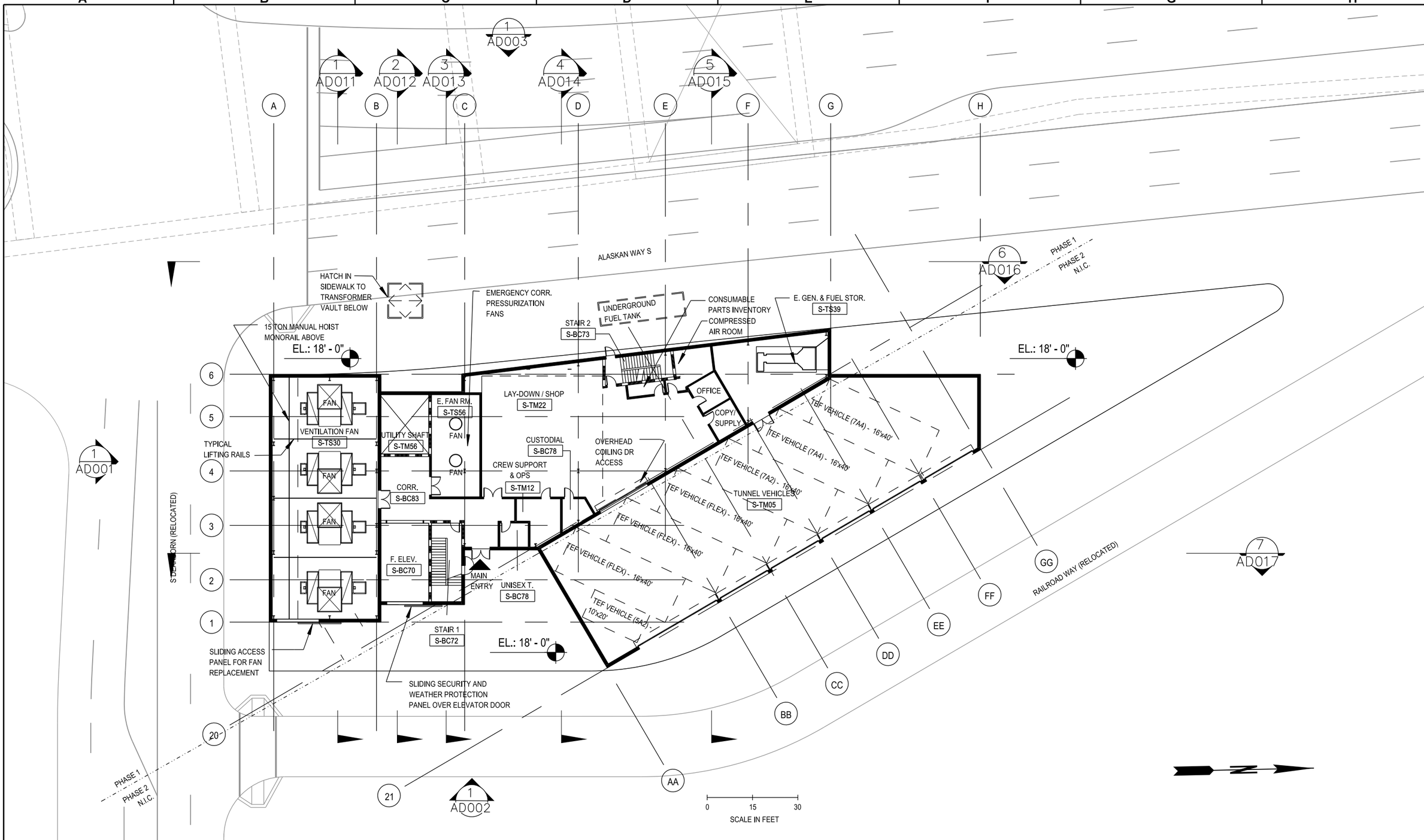

FILE NAME	IP_PWP:dms69909\46055-Sxx-14FP105_OptM.DLV				REGION NO. 10	STATE WASH	FED.AID PROJ.NO.
TIME	22-OCT-2010 06:15				JOB NUMBER	
DATE	22-OCT-2010					
PLOTTED BY	groe					
DESIGNED BY	T. BULFIN					
ENTERED BY	W. HUI					
CHECKED BY	T. BULFIN				CONTRACT NO.	LOCATION NO.
PROJ. ENGR.	S. EVERETT					
REGIONAL ADM.	R. PAANANEN	REVISION	DATE	BY		

4367 REGISTERED ARCHITECT
TERRENCE W. BULFIN
STATE OF WASHINGTON
EXPIRES 1/6/

RFP DESIGN
SUBMITTED BY
SEATTLE TUNNEL PARTNERS

NOT FOR CONSTRUCTION

Washington State Department of Transportation
U.S. Department of Transportation Federal Highway Administration
City of Seattle

ALASKAN WAY VIADUCT REPLACEMENT PROJECT
SR 99 BORED TUNNEL
CONTRACT PACKAGE 14

SOUTH: FLOOR PLAN LEVEL 1

FP105

SHEET 153 OF 208 SHEETS

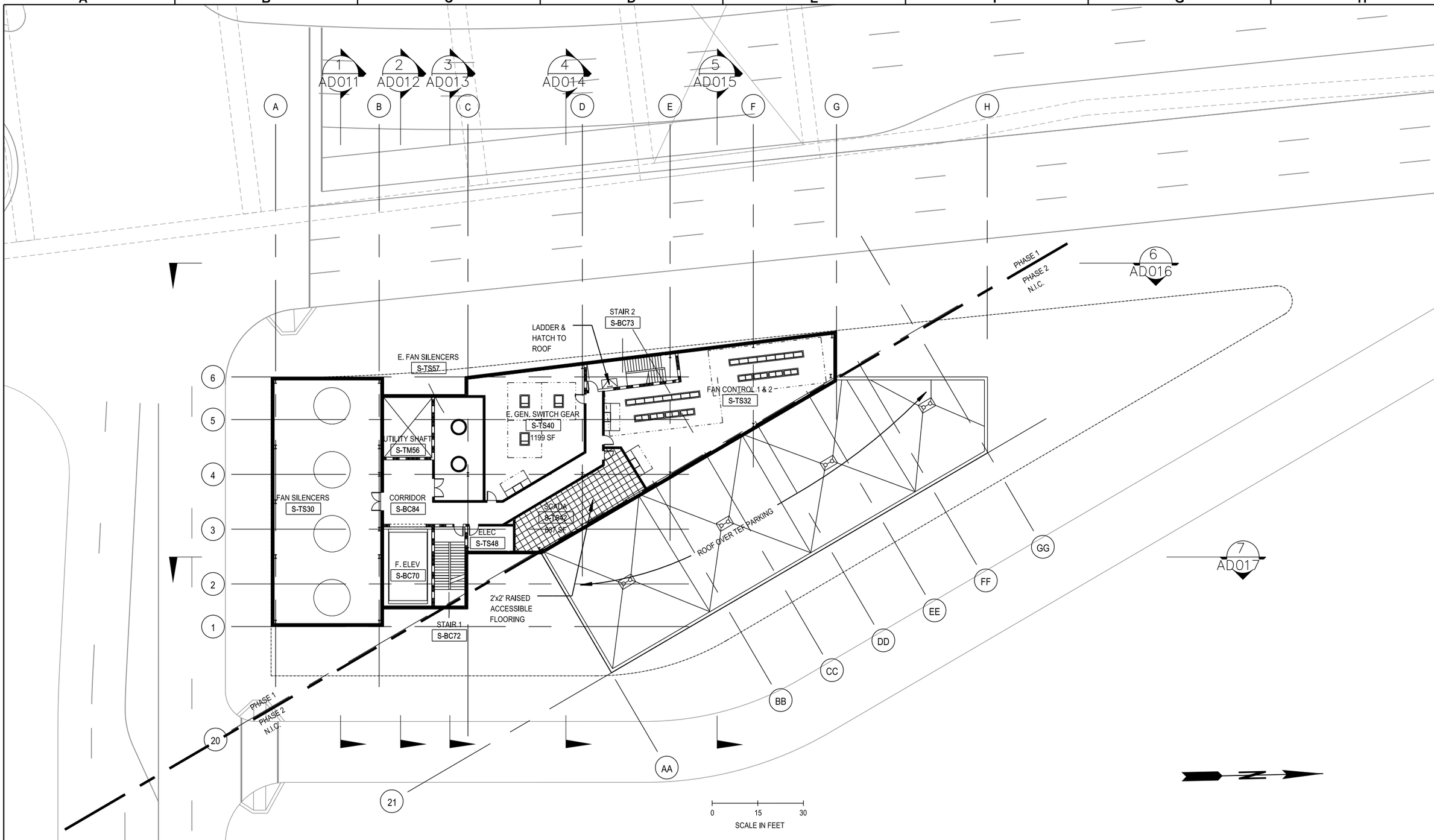

FILE NAME	IP_PWP:dms69909\46055-Sxx-14FP106_OptM.DLV					
TIME	22-OCT-2010 06:16					
DATE	22-OCT-2010					
PLOTTED BY	groe					
DESIGNED BY	T. BULFIN					
ENTERED BY	W. HUI					
CHECKED BY	T. BULFIN					
PROJ. ENGR.	S. EVERETT					
REGIONAL ADM.	R. PAANANEN	REVISION	DATE	BY		

REGION NO.	STATE	FED.AID PROJ.NO.
10	WASH	
JOB NUMBER		
CONTRACT NO.		LOCATION NO.

4367 REGISTERED ARCHITECT
TERRENCE W. BULFIN
STATE OF WASHINGTON
EXPIRES 1/6/

RFP DESIGN
SUBMITTED BY
SEATTLE TUNNEL PARTNERS

NOT FOR CONSTRUCTION

Washington State Department of Transportation
U.S. Department of Transportation Federal Highway Administration
City of Seattle

ALASKAN WAY VIADUCT
REPLACEMENT PROJECT
SR 99 BORED TUNNEL
CONTRACT PACKAGE 14

SOUTH: FLOOR PLAN LEVEL 2

FP106

SHEET 154 OF 208 SHEETS

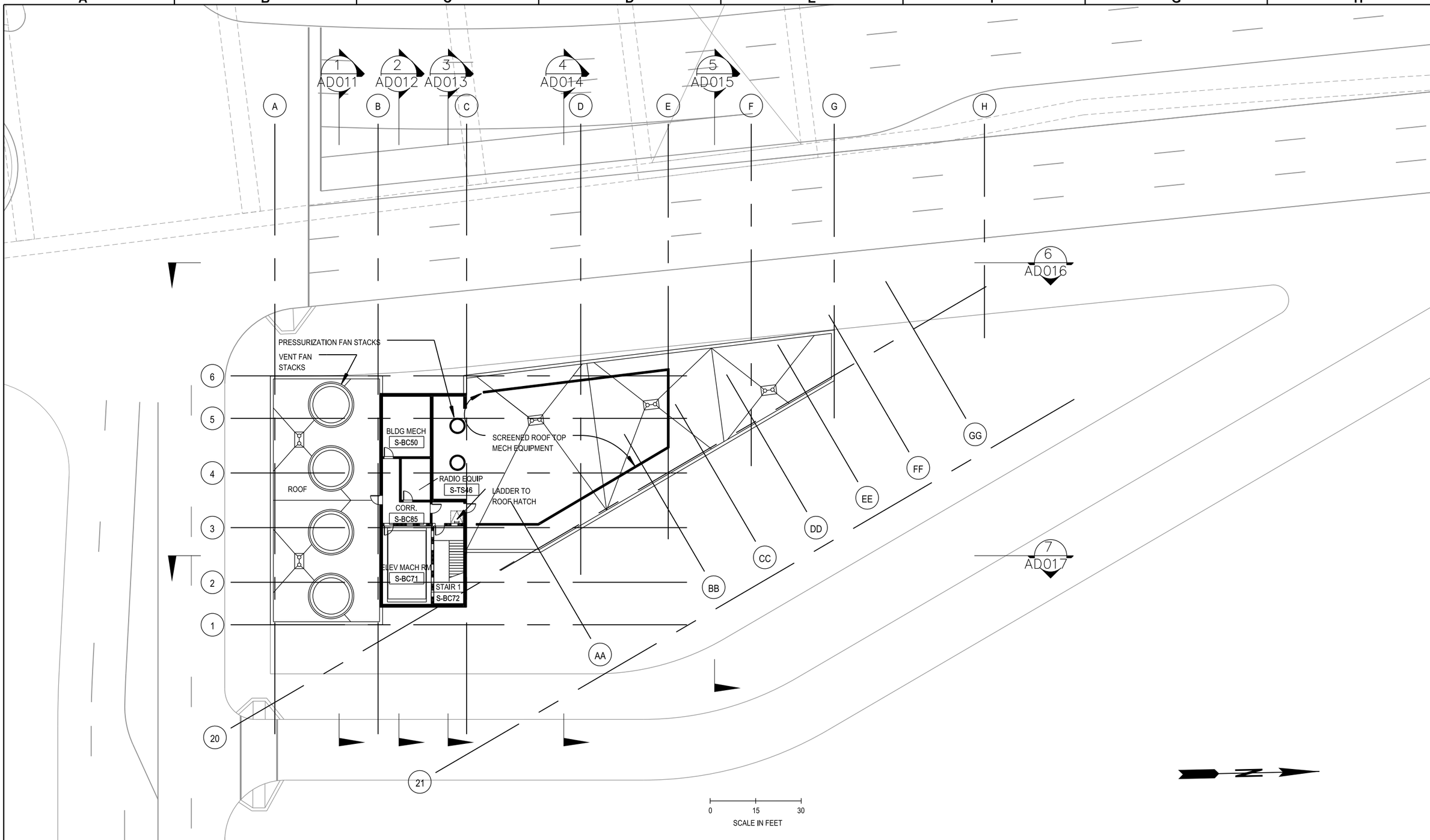

FILE NAME	IP_PWP:dms69909\46055-Sxx-14FP107_OptM.DLV						
TIME	22-OCT-2010 06:16				REGION NO. 10	STATE WASH	FED.AID PROJ.NO.
DATE	22-OCT-2010				JOB NUMBER		
PLOTTED BY	groe						
DESIGNED BY	T. BULFIN						
ENTERED BY	W. HUI						
CHECKED BY	T. BULFIN				CONTRACT NO.		LOCATION NO.
PROJ. ENGR.	S. EVERETT						
REGIONAL ADM.	R. PAANANEN	REVISION	DATE	BY			

4367 REGISTERED ARCHITECT
TERRENCE W. BULFIN
STATE OF WASHINGTON
EXPIRES 1/6/

RFP DESIGN
SUBMITTED BY
SEATTLE TUNNEL PARTNERS

NOT FOR CONSTRUCTION

Washington State Department of Transportation
U.S. Department of Transportation Federal Highway Administration
City of Seattle

ALASKAN WAY VIADUCT
REPLACEMENT PROJECT
SR 99 BORED TUNNEL
CONTRACT PACKAGE 14

SOUTH: FLOOR PLAN LEVEL 3

FP107

SHEET 155 OF 208 SHEETS

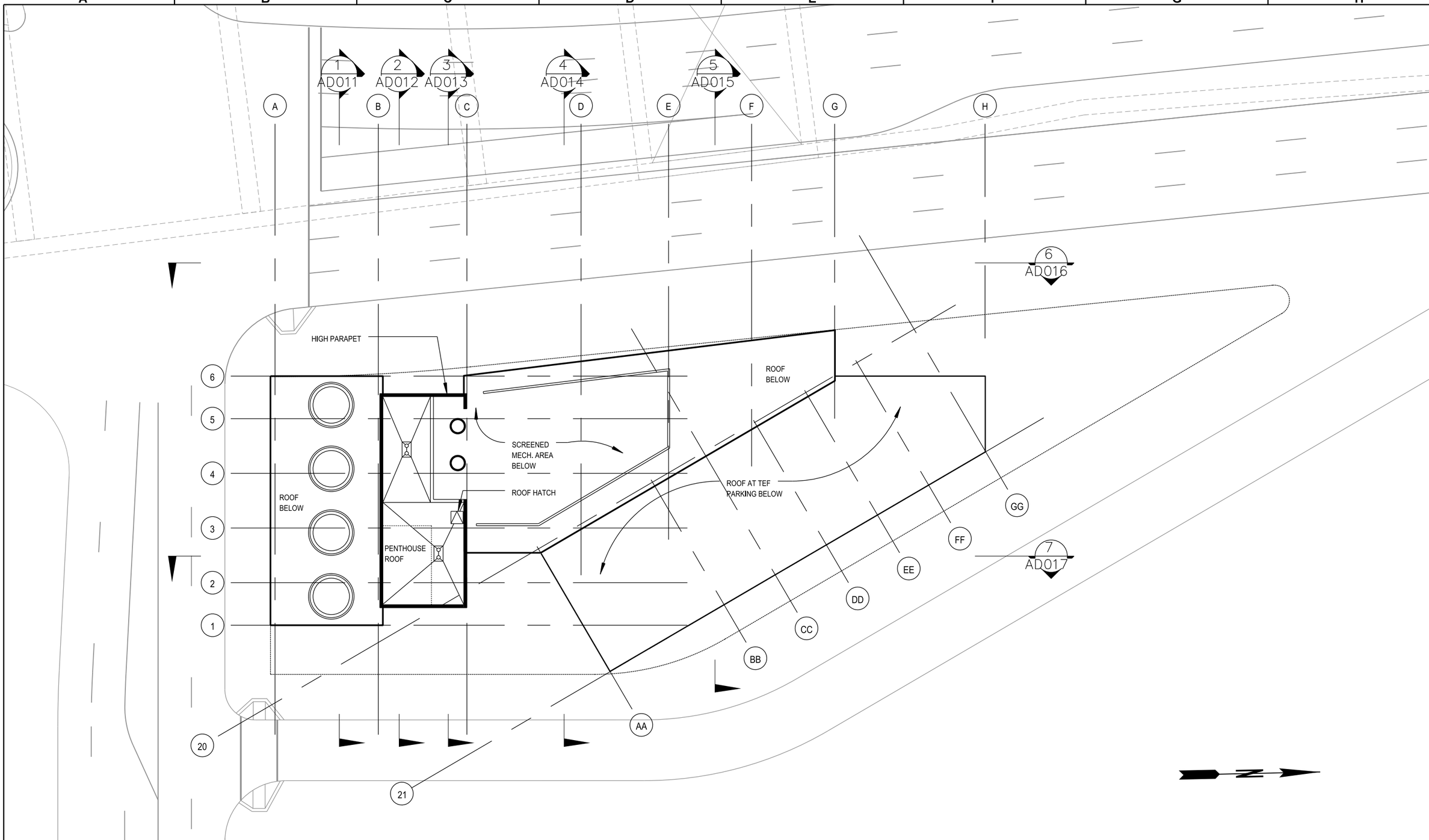

FILE NAME	IP_PWP:dms69909\46055-Sxx-14FP108_OptM.DLV					
TIME	22-OCT-2010 06:16					
DATE	22-OCT-2010					
PLOTTED BY	groe					
DESIGNED BY	T. BULFIN					
ENTERED BY	W. HUI					
CHECKED BY	T. BULFIN					
PROJ. ENGR.	S. EVERETT					
REGIONAL ADM.	R. PAANANEN	REVISION	DATE	BY		

REGION NO.	STATE	FED.AID PROJ.NO.
10	WASH	
JOB NUMBER		
CONTRACT NO.		LOCATION NO.

4367 REGISTERED ARCHITECT
TERRENCE W. BULFIN
STATE OF WASHINGTON
EXPIRES 1/6/

RFP DESIGN
SUBMITTED BY
SEATTLE TUNNEL PARTNERS

NOT FOR CONSTRUCTION

Washington State Department of Transportation
U.S. Department of Transportation Federal Highway Administration
City of Seattle

ALASKAN WAY VIADUCT
REPLACEMENT PROJECT
SR 99 BORED TUNNEL
CONTRACT PACKAGE 14

SOUTH: FLOOR PLAN LEVEL 4

FP108

SHEET 156 OF 208 SHEETS

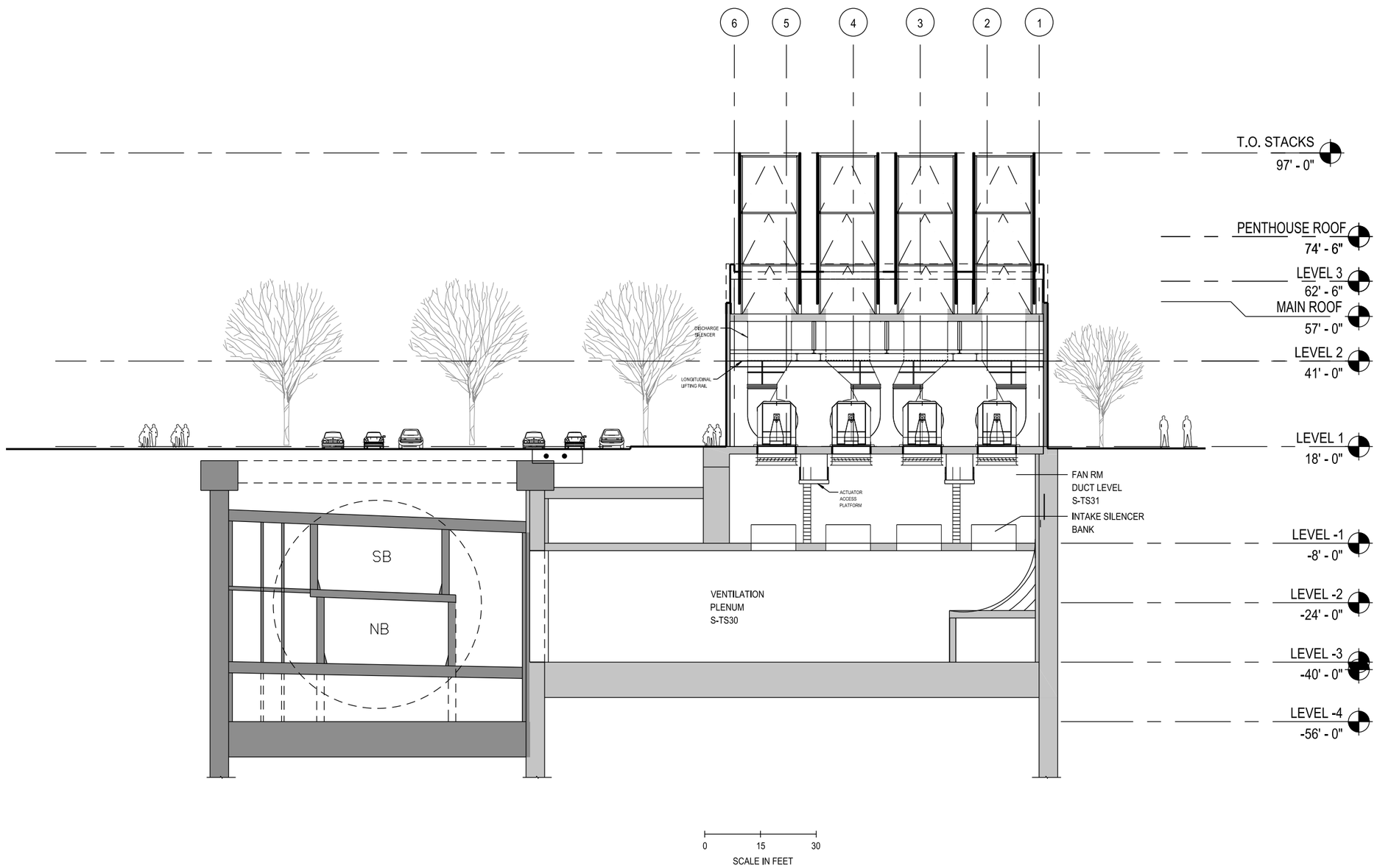

FILE NAME	IP_PWP:dms69909\46055-Sxx-14AD011_OptM.DLV				REGION NO. 10	STATE WASH	FED.AID PROJ.NO.
TIME	22-OCT-2010 06:16				JOB NUMBER		
DATE	22-OCT-2010						
PLOTTED BY	groe						
DESIGNED BY	T. BULFIN				CONTRACT NO.		LOCATION NO.
ENTERED BY	W. HUI						
CHECKED BY	T. BULFIN						
PROJ. ENGR.	S. EVERETT						
REGIONAL ADM.	R. PAANANEN	REVISION	DATE	BY			

4367 REGISTERED ARCHITECT
TERRENCE W. BULFIN
STATE OF WASHINGTON
EXPIRES 1/6/

RFP DESIGN
SUBMITTED BY
SEATTLE TUNNEL PARTNERS

NOT FOR CONSTRUCTION

Washington State Department of Transportation
U.S. Department of Transportation Federal Highway Administration
City of Seattle

ALASKAN WAY VIADUCT
REPLACEMENT PROJECT
SR 99 BORED TUNNEL
CONTRACT PACKAGE 14

SOUTH: BUILDING SECTION 1

AD011

SHEET 157 OF 208 SHEETS

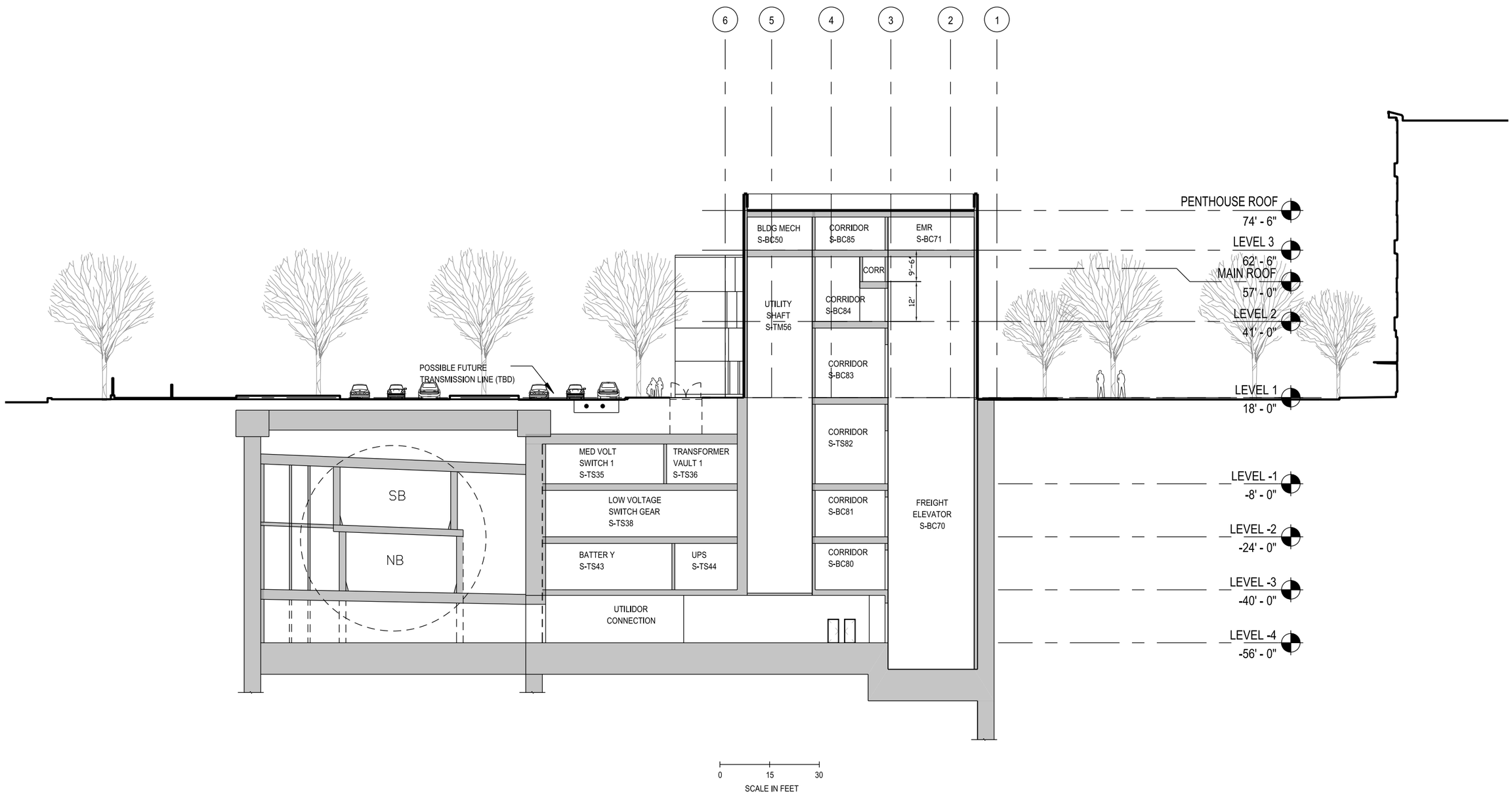

FILE NAME	IP_PWP:dms69909\46055-Sxx-14AD012_OptM.DLV						
TIME	22-OCT-2010 06:16				REGION NO. 10	STATE WASH	FED.AID PROJ.NO.
DATE	22-OCT-2010						
PLOTTED BY	groe				JOB NUMBER		
DESIGNED BY	T. BULFIN						
ENTERED BY	W. HUI						
CHECKED BY	T. BULFIN				CONTRACT NO.		LOCATION NO.
PROJ. ENGR.	S. EVERETT						
REGIONAL ADM.	R. PAANANEN	REVISION	DATE	BY			

4367 REGISTERED ARCHITECT
TERRENCE W. BULFIN
STATE OF WASHINGTON
EXPIRES 1/6/

RFP DESIGN
SUBMITTED BY
SEATTLE TUNNEL PARTNERS

NOT FOR CONSTRUCTION

Washington State Department of Transportation
U.S. Department of Transportation Federal Highway Administration
City of Seattle

ALASKAN WAY VIADUCT
REPLACEMENT PROJECT
SR 99 BORED TUNNEL
CONTRACT PACKAGE 14

SOUTH: BUILDING SECTION 2

AD012

SHEET 158 OF 208 SHEETS

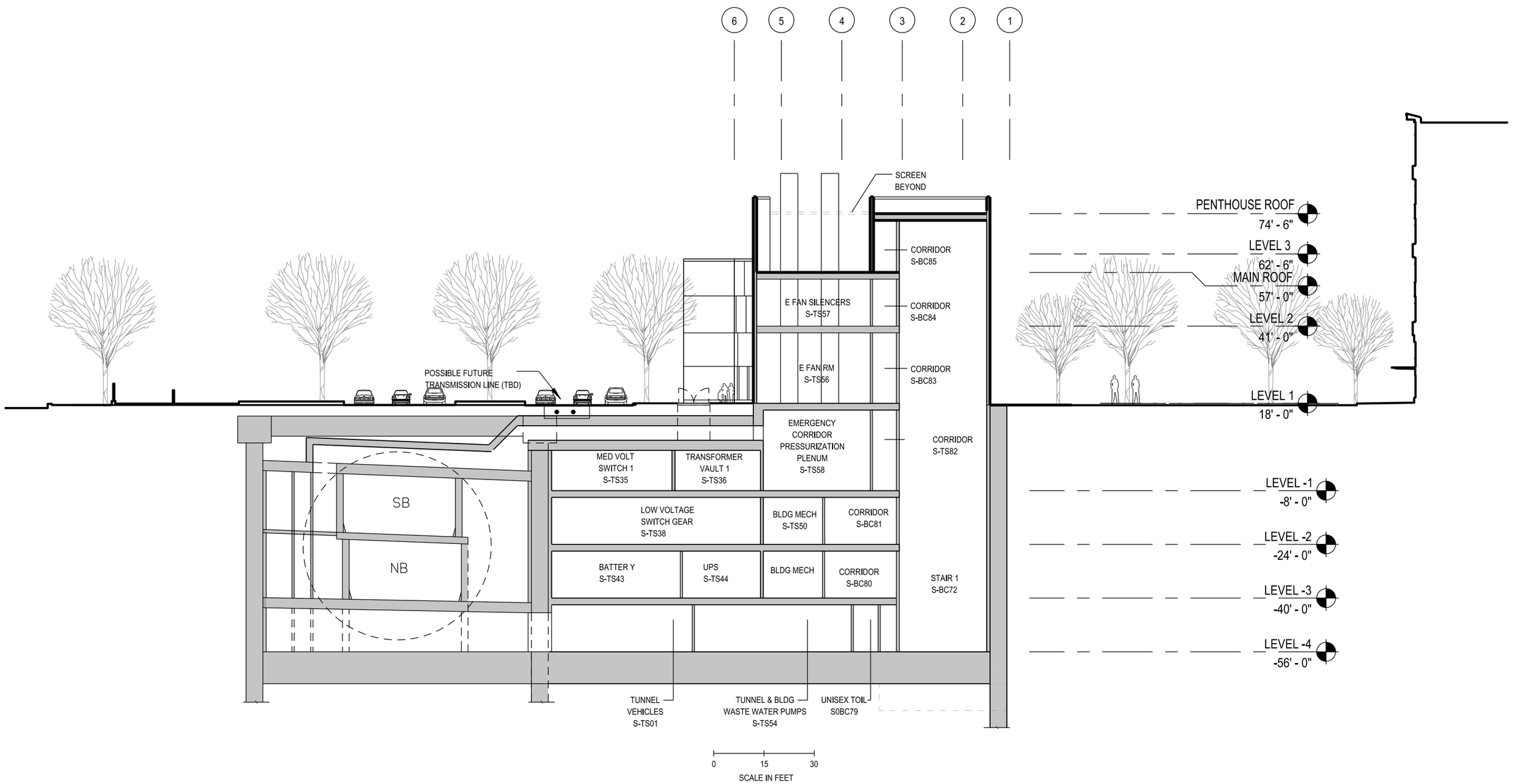

FILE NAME	IP_PWP:dms69909\46055-Sxx-14AD013_OptM.DLV
TIME	22-OCT-2010 06:17
DATE	22-OCT-2010
PLOTTED BY	groe
DESIGNED BY	T. BULFIN
ENTERED BY	W. HUI
CHECKED BY	T. BULFIN
PROJ. ENGR.	S. EVERETT
REGIONAL ADM.	R. PAANANEN

REVISION	DATE	BY

REGION NO.	STATE	FED.AID PROJ.NO.
10	WASH	
JOB NUMBER		
CONTRACT NO.		LOCATION NO.

4367 REGISTERED ARCHITECT
TERRENCE W. BULFIN
STATE OF WASHINGTON
EXPIRES 1/6/

RFP DESIGN
SUBMITTED BY
SEATTLE TUNNEL PARTNERS

NOT FOR CONSTRUCTION

Washington State Department of Transportation
U.S. Department of Transportation Federal Highway Administration
City of Seattle

ALASKAN WAY VIADUCT
REPLACEMENT PROJECT
SR 99 BORED TUNNEL
CONTRACT PACKAGE 14

SOUTH: BUILDING SECTION 3

AD013

SHEET 159 OF 208 SHEETS

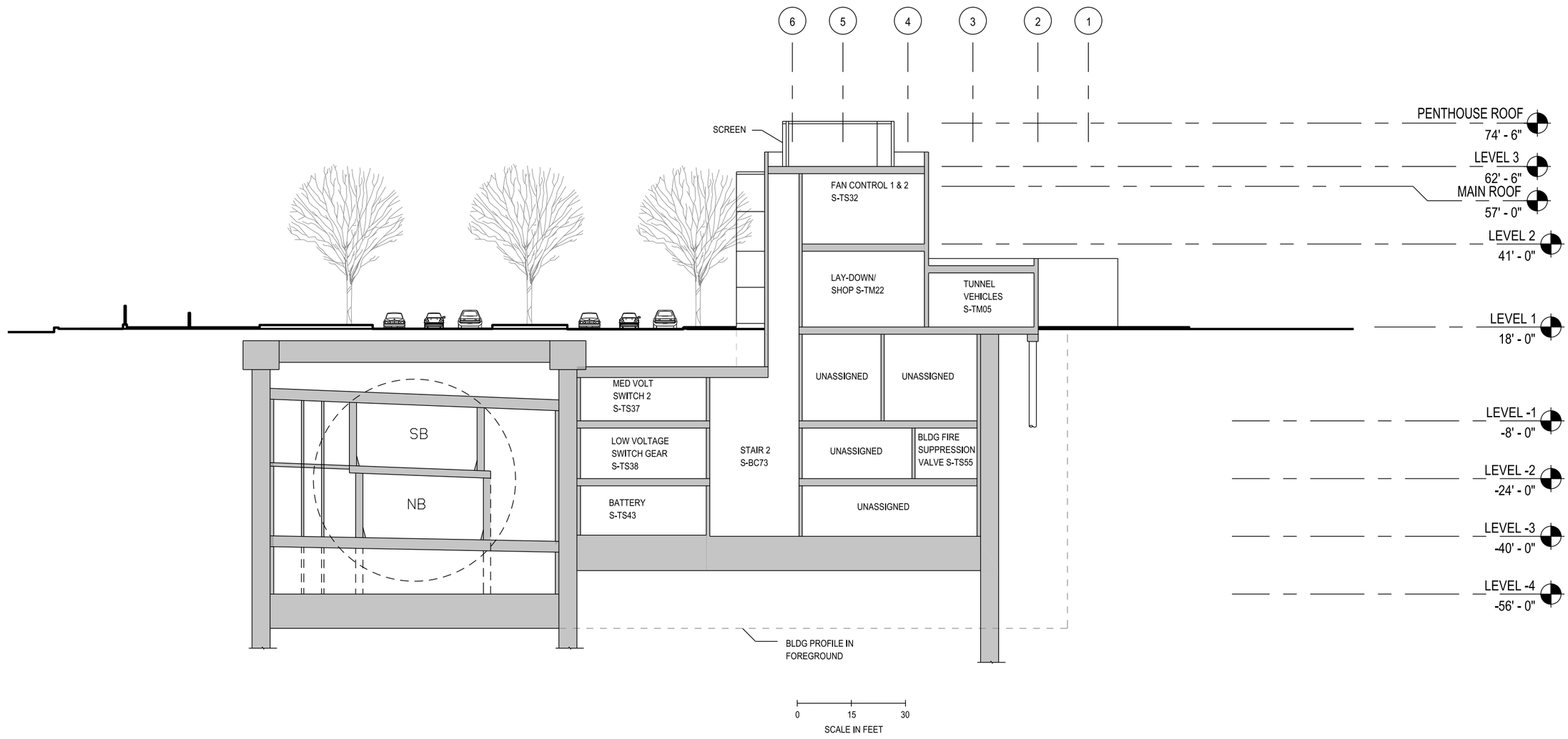

FILE NAME	IP_PWP:dms69909\46055-Sxx-14AD014_OptM.DLV
TIME	22-OCT-2010 06:17
DATE	22-OCT-2010
PLOTTED BY	gree
DESIGNED BY	T. BULFIN
ENTERED BY	W. HUI
CHECKED BY	T. BULFIN
PROJ. ENGR.	S. EVERETT
REGIONAL ADM.	R. PAANANEN

REVISION	DATE	BY

REGION NO.	STATE	FED.AID PROJ.NO.
10	WASH	
JOB NUMBER		
CONTRACT NO.		LOCATION NO.

4367 REGISTERED ARCHITECT
TERRENCE W. BULFIN
STATE OF WASHINGTON
EXPIRES 1/6/

RFP DESIGN
SUBMITTED BY
SEATTLE TUNNEL PARTNERS

NOT FOR CONSTRUCTION

Washington State Department of Transportation
U.S. Department of Transportation Federal Highway Administration
City of Seattle

ALASKAN WAY VIADUCT
REPLACEMENT PROJECT
SR 99 BORED TUNNEL
CONTRACT PACKAGE 14

SOUTH: BUILDING SECTION 4

AD014

SHEET 160 OF 208 SHEETS

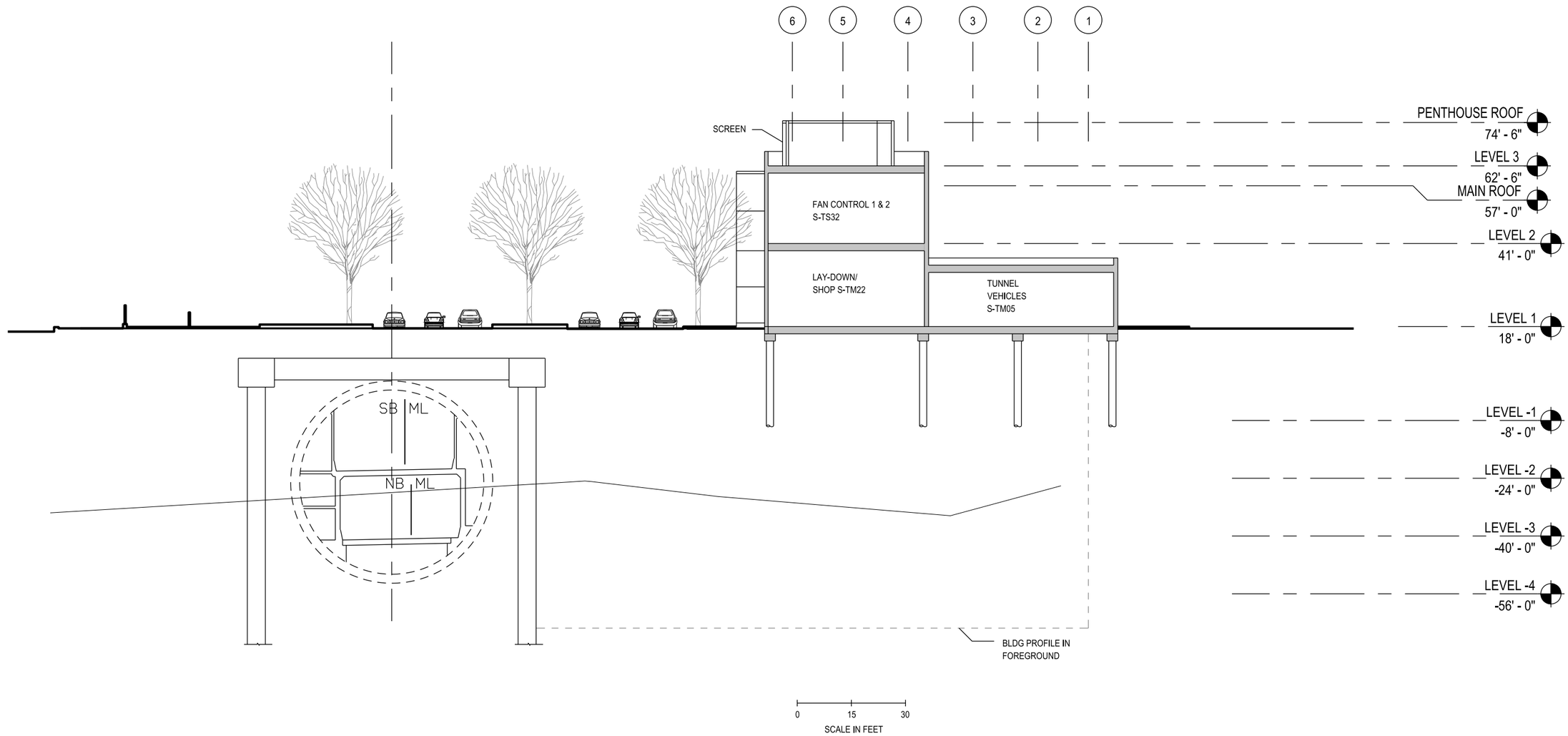

FILE NAME	IP_PWP:dms69909\46055-Sxx-14AD015_OptM.DLV				REGION NO.	STATE	FED.AID PROJ.NO.
TIME	22-OCT-2010 06:17				10	WASH	
DATE	22-OCT-2010				JOB NUMBER		
PLOTTED BY	groe						
DESIGNED BY	T. BULFIN						
ENTERED BY	W. HUI						
CHECKED BY	T. BULFIN				CONTRACT NO.		LOCATION NO.
PROJ. ENGR.	S. EVERETT						
REGIONAL ADM.	R. PAANANEN	REVISION	DATE	BY			

4367 REGISTERED ARCHITECT
TERRENCE W. BULFIN
STATE OF WASHINGTON
EXPIRES 1/6/

RFP DESIGN
SUBMITTED BY
SEATTLE TUNNEL PARTNERS

NOT FOR CONSTRUCTION

Washington State Department of Transportation
U.S. Department of Transportation Federal Highway Administration
City of Seattle

ALASKAN WAY VIADUCT
REPLACEMENT PROJECT
SR 99 BORED TUNNEL
CONTRACT PACKAGE 14

SOUTH: BUILDING SECTION 5

AD015

SHEET 161 OF 208 SHEETS

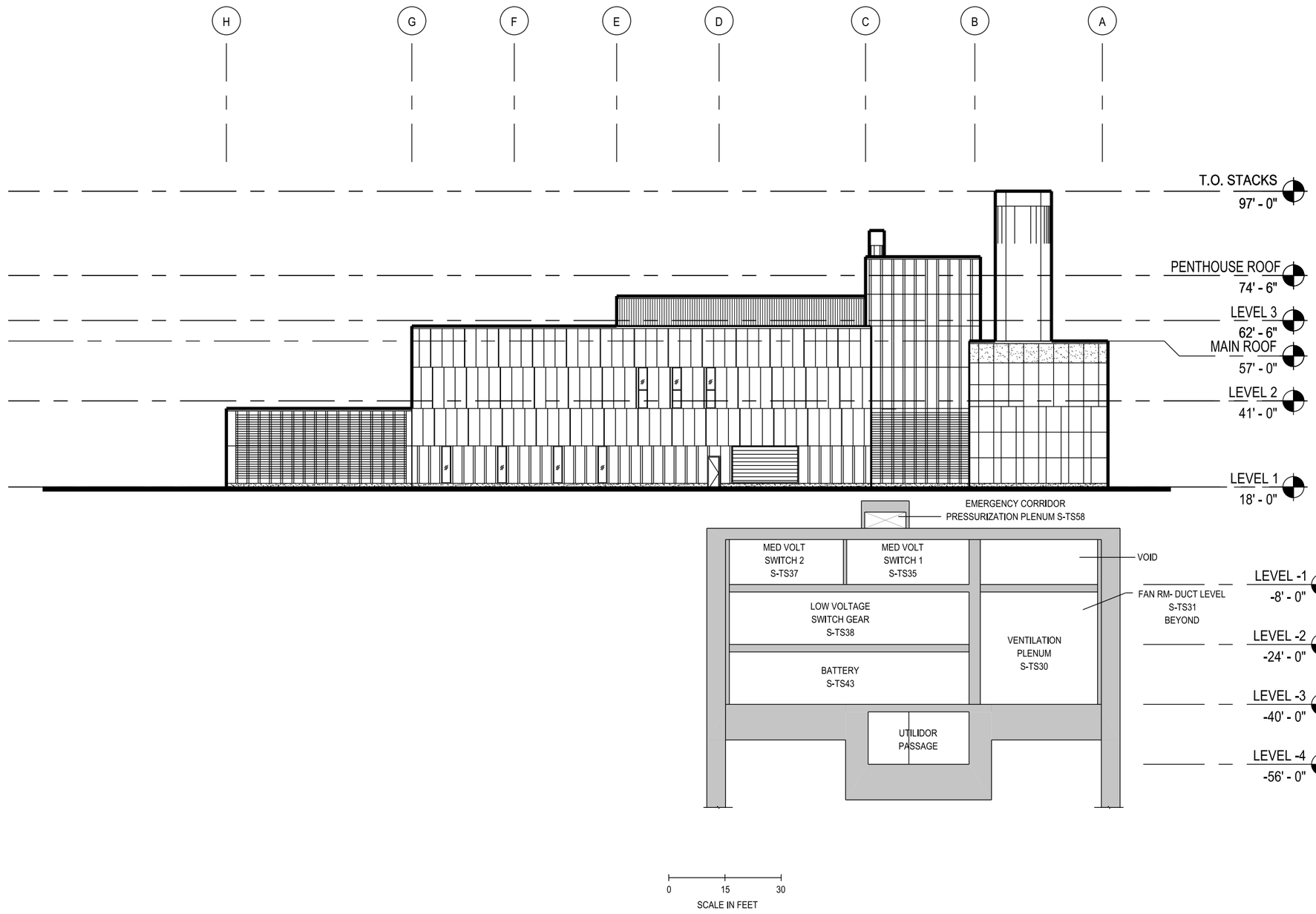

FILE NAME	IP_PWP:dms69909\46055-Sxx-14AD016_OptM.DLV						
TIME	22-OCT-2010 06:17				REGION NO. 10	STATE WASH	FED.AID PROJ.NO.
DATE	22-OCT-2010						
PLOTTED BY	groe				JOB NUMBER		
DESIGNED BY	T. BULFIN						
ENTERED BY	W. HUI						
CHECKED BY	T. BULFIN				CONTRACT NO.		LOCATION NO.
PROJ. ENGR.	S. EVERETT						
REGIONAL ADM.	R. PAANANEN	REVISION	DATE	BY			

4367 REGISTERED ARCHITECT
TERRENCE W. BULFIN
STATE OF WASHINGTON
EXPIRES 1/6/

RFP DESIGN
SUBMITTED BY
SEATTLE TUNNEL PARTNERS

NOT FOR CONSTRUCTION

Washington State Department of Transportation
U.S. Department of Transportation Federal Highway Administration
City of Seattle

ALASKAN WAY VIADUCT
REPLACEMENT PROJECT
SR 99 BORED TUNNEL
CONTRACT PACKAGE 14

SOUTH: BUILDING SECTION 6

AD016

SHEET 162 OF 208 SHEETS

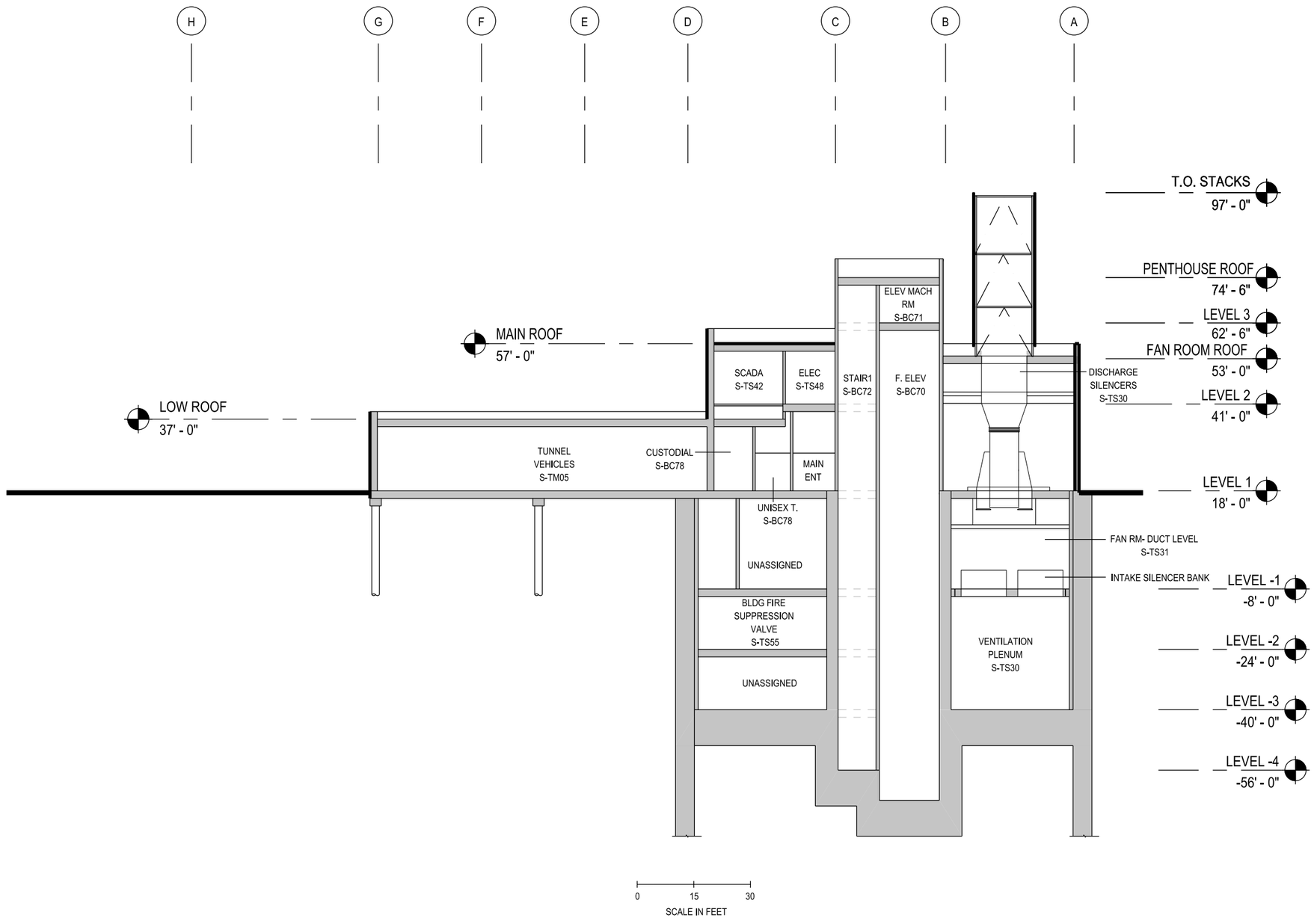

FILE NAME	IP_PWP:dms69909\46055-Sxx-14AD017_OptM.DLV				REGION NO. 10	STATE WASH	FED.AID PROJ.NO.
TIME	22-OCT-2010 06:18				JOB NUMBER		
DATE	22-OCT-2010						
PLOTTED BY	groe						
DESIGNED BY	T. BULFIN						
ENTERED BY	W. HUI						
CHECKED BY	T. BULFIN				CONTRACT NO.		LOCATION NO.
PROJ. ENGR.	S. EVERETT						
REGIONAL ADM.	R. PAANANEN	REVISION	DATE	BY			

4367 REGISTERED ARCHITECT
TERRENCE W. BULFIN
STATE OF WASHINGTON
EXPIRES 1/6/

RFP DESIGN
SUBMITTED BY
SEATTLE TUNNEL PARTNERS

NOT FOR CONSTRUCTION

Washington State Department of Transportation
U.S. Department of Transportation Federal Highway Administration
City of Seattle

ALASKAN WAY VIADUCT
REPLACEMENT PROJECT
SR 99 BORED TUNNEL
CONTRACT PACKAGE 14

SOUTH: BUILDING SECTION 7

AD017

SHEET 163 OF 208 SHEETS

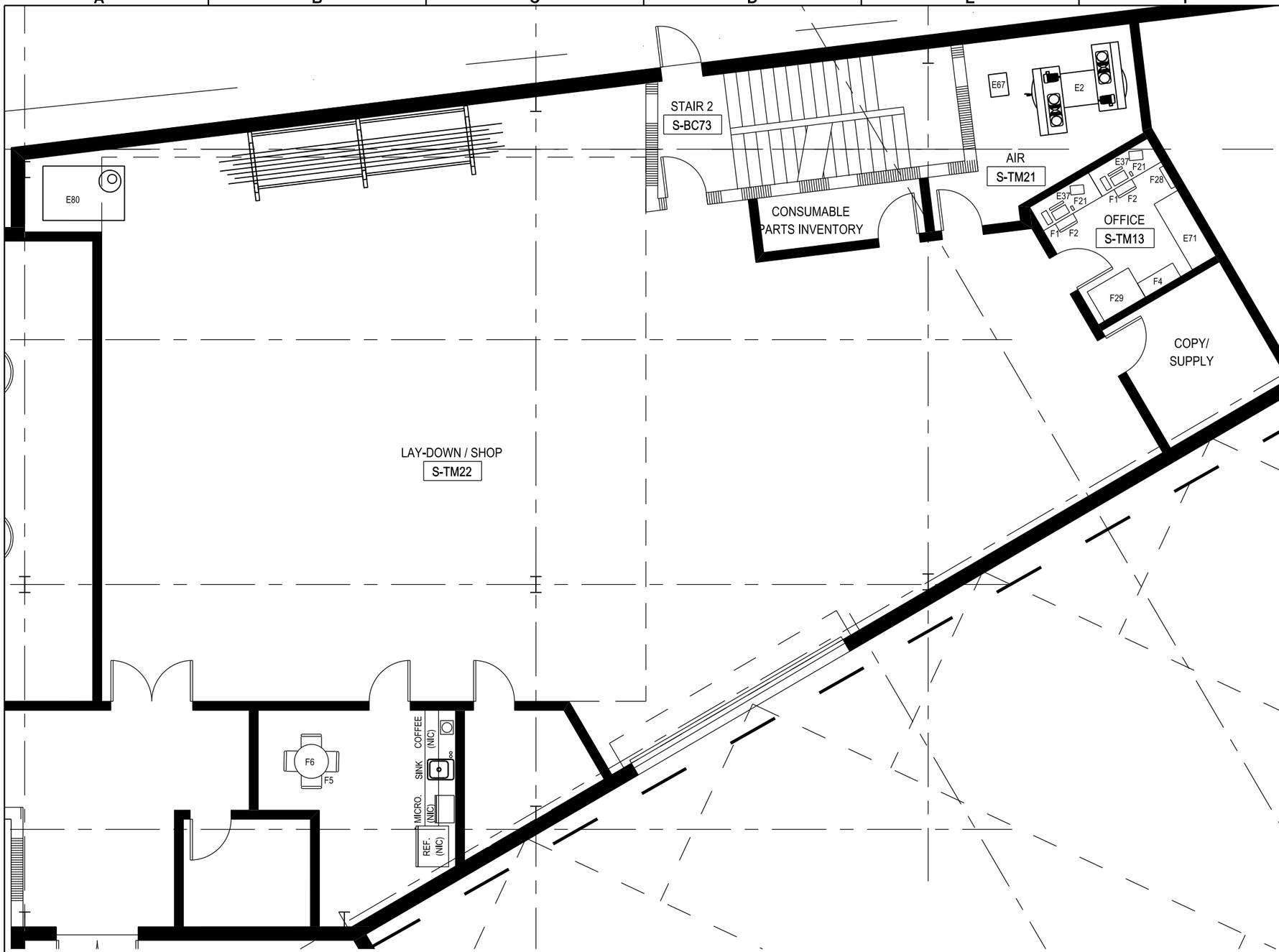

ENLARGED PLAN– SHOPS 1

0 4 8
SCALE IN FEET

CF/CI EQUIPMENT SCHEDULE

EQ ID #	DESCRIPTION
E2	COMPRESSOR, AIR, REC. MTD., DUPLEX
E10	SHOWER, DRENCH, WITH EYE WASH
E67	DRYER, AIR REFRIGERATED
E80	DUST COLLECTION SYSTEM

NIC EQUIPMENT SCHEDULE

EQ ID #	DESCRIPTION
E37	COMPUTER
E71	COPY MACHINE
F1	OFFICE DESK
F2	OFFICE CHAIRS
F4	SHELVING UNIT, 12 INCHES
F5	SIDE CHAIR
F6	ROUND TABLE
F8	CABINET, FILE, VERTICAL (LEGAL)
F21	TELEPHONE
F28	PAPER SHREDDER
F29	FOUR DRAWER LATERAL FILE
S9	RACK, 48 INCH ARM, 20 FOOT STOCK

FILE NAME	IP_PWP:dms69909\46055-Sxx-14AD021_OptM.DLV
TIME	22-OCT-2010 06:18
DATE	22-OCT-2010
PLOTTED BY	groe
DESIGNED BY	T. BULFIN
ENTERED BY	W. HUI
CHECKED BY	T. BULFIN
PROJ. ENGR.	S. EVERETT
REGIONAL ADM.	R. PAANANEN

REVISION | DATE | BY

REGION NO. 10 | STATE WASH | FED.AID PROJ.NO.
JOB NUMBER
CONTRACT NO. | LOCATION NO.

4367 REGISTERED ARCHITECT
TERRENCE W. BULFIN
STATE OF WASHINGTON
EXPIRES 1/6/

RFP DESIGN
SUBMITTED BY
SEATTLE TUNNEL PARTNERS
NOT FOR CONSTRUCTION

Washington State Department of Transportation
U.S. Department of Transportation Federal Highway Administration
City of Seattle

ALASKAN WAY VIADUCT REPLACEMENT PROJECT
SR 99 BORED TUNNEL
CONTRACT PACKAGE 14

SOUTH: CENTRAL SHOP

AD021

SHEET 164 OF 208 SHEETS

LEGEND

- Planting Areas – Off–structure
- Planting Areas – On–structure
- Scored Concrete or Unit Pavers
- Plain Concrete Pavement/Stairs
- Pervious Sidewalk Paving
- Green Walls
- Special Architectural Feature/Screen

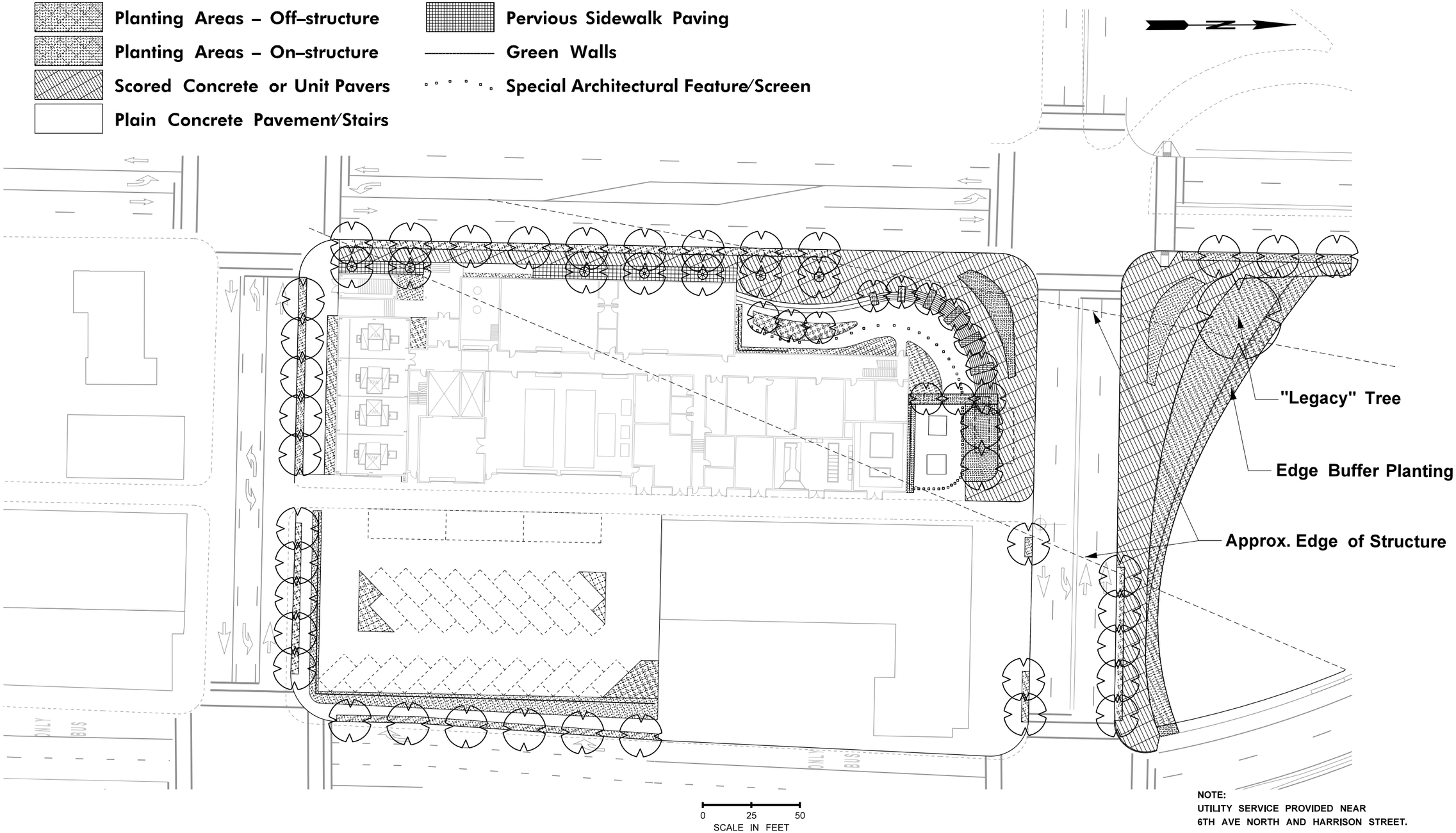

NOTE:
UTILITY SERVICE PROVIDED NEAR
6TH AVE NORTH AND HARRISON STREET.

FILE NAME	IP_PWP:dms69909\46055-Nxx-14AS300_OptM.DLV
TIME	25-OCT-2010 13:43
DATE	25-OCT-2010
PLOTTED BY	groe
DESIGNED BY	W. HUI
ENTERED BY	W. HUI
CHECKED BY	T. BULFIN
PROJ. ENGR.	S. EVERETT
REGIONAL ADM.	R. PAANANEN

REVISION	DATE	BY

REGION NO.	STATE	FED.AID PROJ.NO.
10	WASH	
JOB NUMBER		
CONTRACT NO.		LOCATION NO.

4367 REGISTERED ARCHITECT
TERRENCE W. BULFIN
STATE OF WASHINGTON
EXPIRES 1/6/

RFP DESIGN
SUBMITTED BY
SEATTLE TUNNEL PARTNERS

NOT FOR CONSTRUCTION

Washington State Department of Transportation
U.S. Department of Transportation Federal Highway Administration
City of Seattle

ALASKAN WAY VIADUCT
REPLACEMENT PROJECT
SR 99 BORED TUNNEL
CONTRACT PACKAGE 14

NORTH: SITE PLAN

AS300

SHEET 165 OF 208 SHEETS

LEGEND

- Public Access
- Employee Access
- Parking Access
- Delivery Access
- Fueling Access

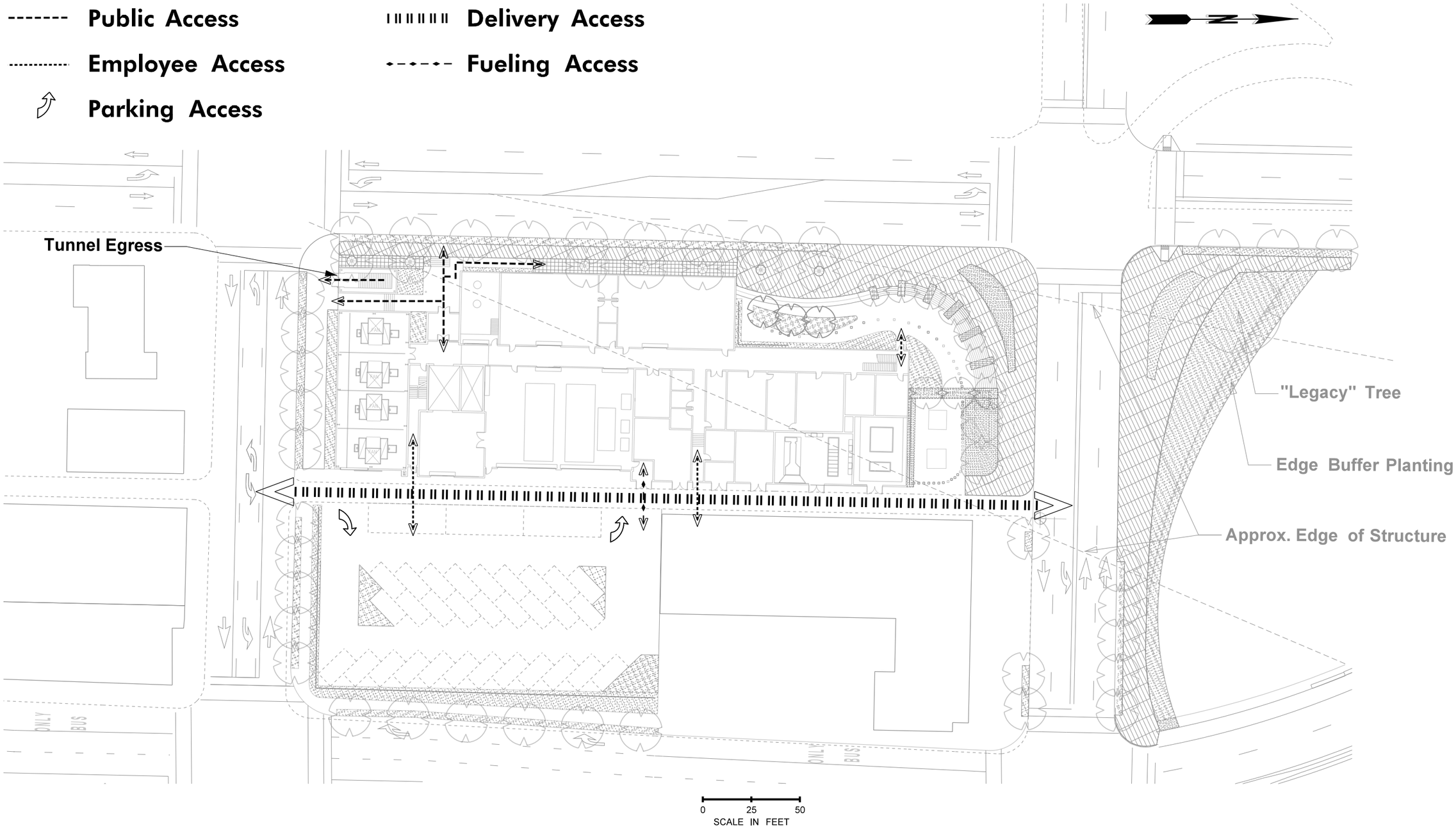

FILE NAME	IP_PWP:dms69909\46055-Nxx-14AS301_OptM.DLV				REGION NO.	STATE	FED.AID PROJ.NO.
TIME	22-OCT-2010 06:18				10	WASH	
DATE	22-OCT-2010				JOB NUMBER		
PLOTTED BY	groe						
DESIGNED BY	W. HUI				CONTRACT NO.		LOCATION NO.
ENTERED BY	W. HUI						
CHECKED BY	T. BULFIN						
PROJ. ENGR.	S. EVERETT						
REGIONAL ADM.	R. PAANANEN	REVISION	DATE	BY			

4367 REGISTERED ARCHITECT
TERRENCE W. BULFIN
STATE OF WASHINGTON
EXPIRES 1/6/

RFP DESIGN
SUBMITTED BY
SEATTLE TUNNEL PARTNERS

NOT FOR CONSTRUCTION

Washington State Department of Transportation
U.S. Department of Transportation Federal Highway Administration
City of Seattle

ALASKAN WAY VIADUCT
REPLACEMENT PROJECT
SR 99 BORED TUNNEL
CONTRACT PACKAGE 14

NORTH: SITE PLAN
CIRCULATION DIAGRAM

AS301

SHEET 166 OF 208 SHEETS

FILE NAME	IP_PWP:dms69909\46055-Nxx-14AS302_OptM.DLV						
TIME	22-OCT-2010 06:19				REGION NO. 10	STATE WASH	FED.AID PROJ.NO.
DATE	22-OCT-2010						
PLOTTED BY	groe				JOB NUMBER		
DESIGNED BY	E. CHANG						
ENTERED BY	E. CHANG						
CHECKED BY	T. BULFIN				CONTRACT NO.		LOCATION NO.
PROJ. ENGR.	S. EVERETT	ADDED NOTE		BPR			
REGIONAL ADM.	R. PAANANEN	REVISION	DATE	BY			

4367 REGISTERED ARCHITECT
TERRENCE W. BULFIN
STATE OF WASHINGTON
EXPIRES 1/6/

RFP DESIGN
SUBMITTED BY
SEATTLE TUNNEL PARTNERS

NOT FOR CONSTRUCTION

Washington State Department of Transportation
U.S. Department of Transportation Federal Highway Administration
City of Seattle

ALASKAN WAY VIADUCT
REPLACEMENT PROJECT
SR 99 BORED TUNNEL
CONTRACT PACKAGE 14

PERSPECTIVE: NORTH BUILDING

AS302

SHEET 167 OF 208 SHEETS

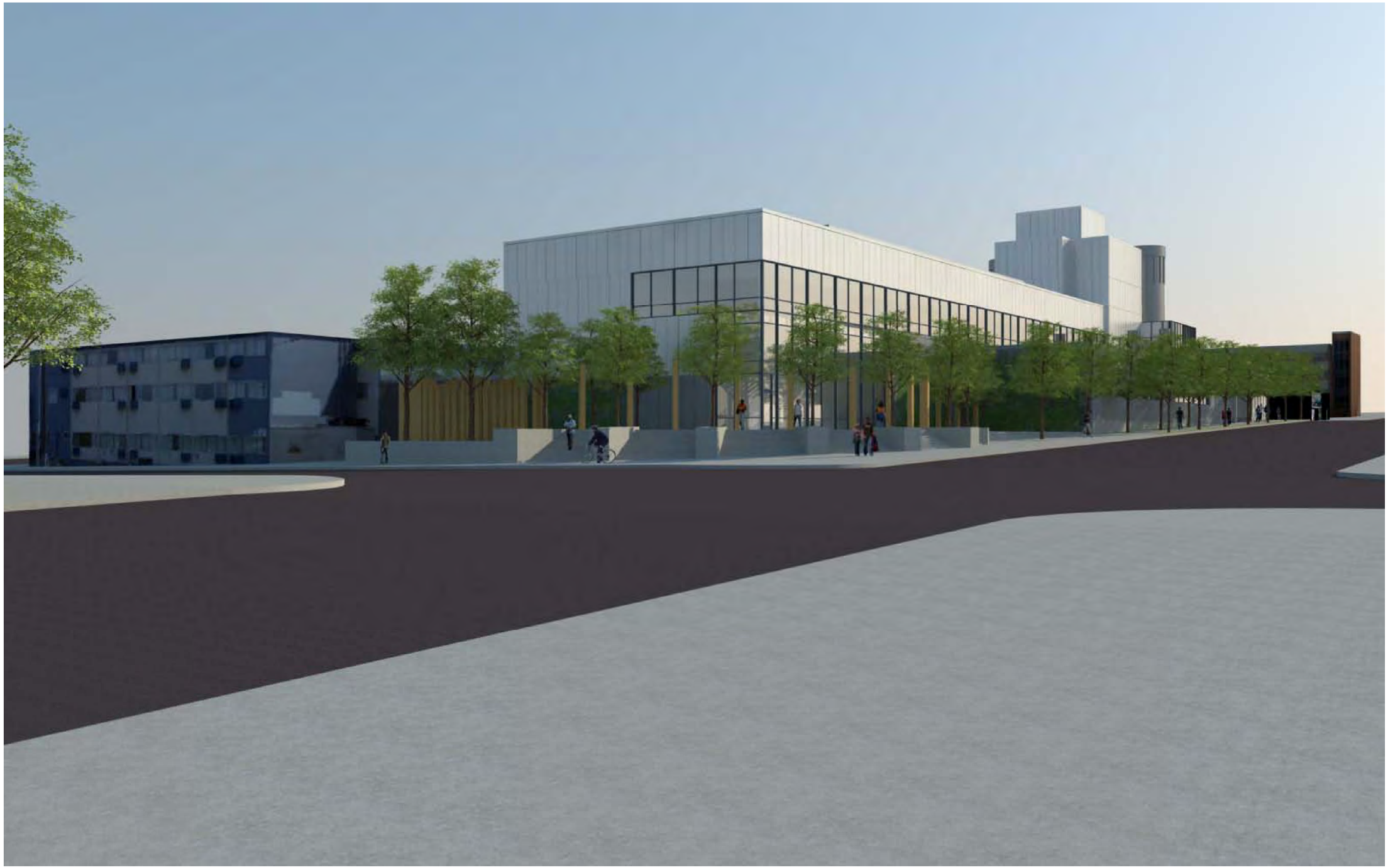

FILE NAME	IP_PWP:dms69909\46055-Nxx-14AS303_OptM.DLV						
TIME	22-OCT-2010 07:44				REGION NO. 10	STATE WASH	FED.AID PROJ.NO.
DATE	22-OCT-2010						
PLOTTED BY	groe				JOB NUMBER		
DESIGNED BY	E. CHANG						
ENTERED BY	E. CHANG						
CHECKED BY	T. BULFIN				CONTRACT NO.		LOCATION NO.
PROJ. ENGR.	S. EVERETT	ADDED NOTE		BPR			
REGIONAL ADM.	R. PAANANEN	REVISION	DATE	BY			

4367 REGISTERED ARCHITECT
TERRENCE W. BULFIN
STATE OF WASHINGTON
EXPIRES 1/6/

RFP DESIGN
SUBMITTED BY
SEATTLE TUNNEL PARTNERS

NOT FOR CONSTRUCTION

Washington State Department of Transportation
U.S. Department of Transportation Federal Highway Administration
City of Seattle

ALASKAN WAY VIADUCT
REPLACEMENT PROJECT
SR 99 BORED TUNNEL
CONTRACT PACKAGE 14

PERSPECTIVE: NORTH BUILDING

AS303

SHEET 168 OF 208 SHEETS

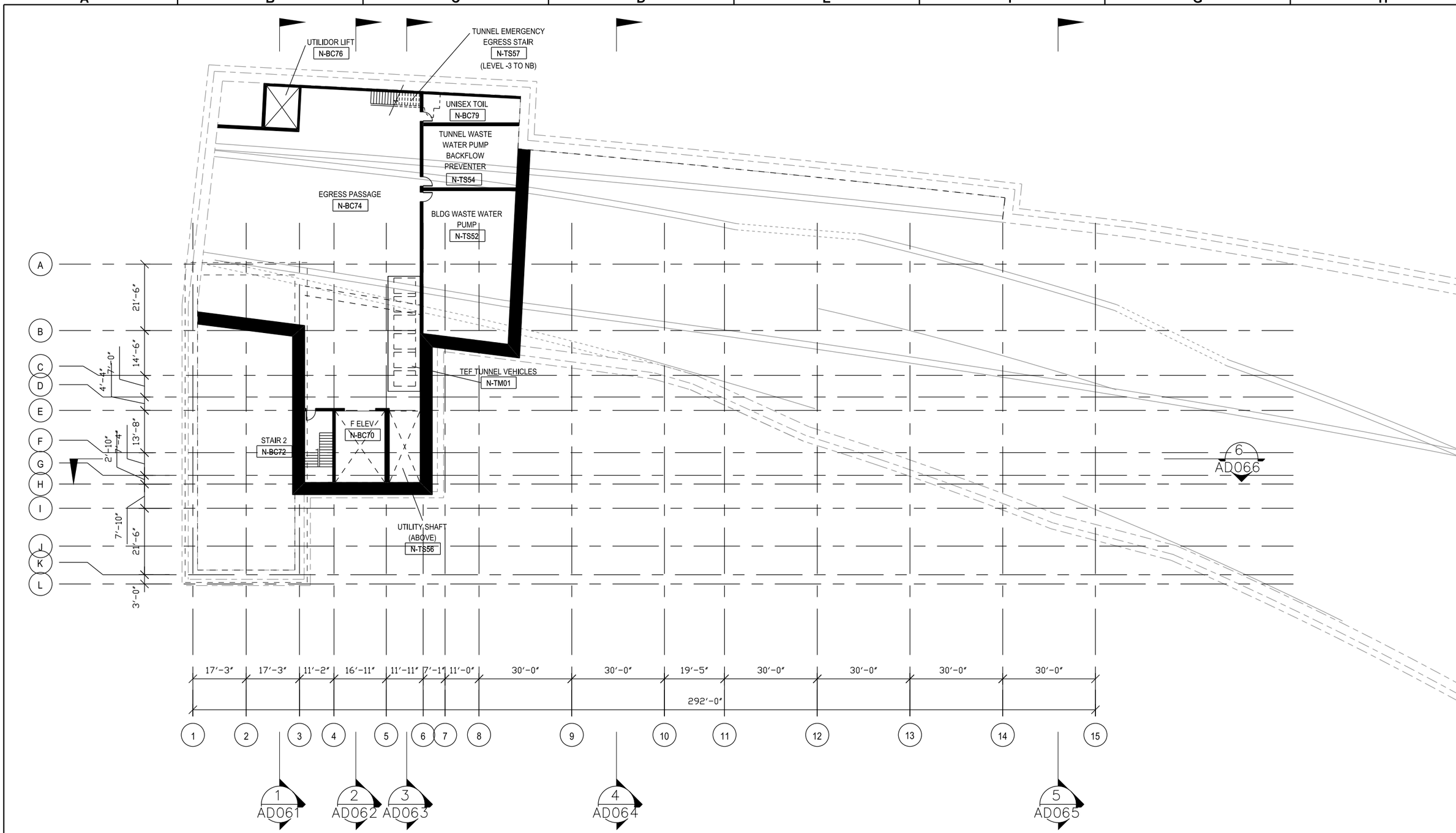

FILE NAME	IP_PWP:dms69909\46055-Nxx-14FP301_OptM.DLV				REGION NO.	STATE	FED.AID PROJ.NO.
TIME	22-OCT-2010 06:20				10	WASH	
DATE	22-OCT-2010				JOB NUMBER		
PLOTTED BY	groe						
DESIGNED BY	T. BULFIN				CONTRACT NO.		LOCATION NO.
ENTERED BY	W. HUI						
CHECKED BY	T. BULFIN						
PROJ. ENGR.	S. EVERETT						
REGIONAL ADM.	R. PAANANEN	REVISION	DATE	BY			

4367 REGISTERED ARCHITECT
TERRENCE W. BULFIN
STATE OF WASHINGTON
EXPIRES 1/6/

RFP DESIGN
SUBMITTED BY
SEATTLE TUNNEL PARTNERS

NOT FOR CONSTRUCTION

Washington State Department of Transportation
U.S. Department of Transportation Federal Highway Administration
City of Seattle

ALASKAN WAY VIADUCT REPLACEMENT PROJECT
SR 99 BORED TUNNEL
CONTRACT PACKAGE 14

NORTH: FLOOR PLAN LEVEL –3

FP301

SHEET 169 OF 208 SHEETS

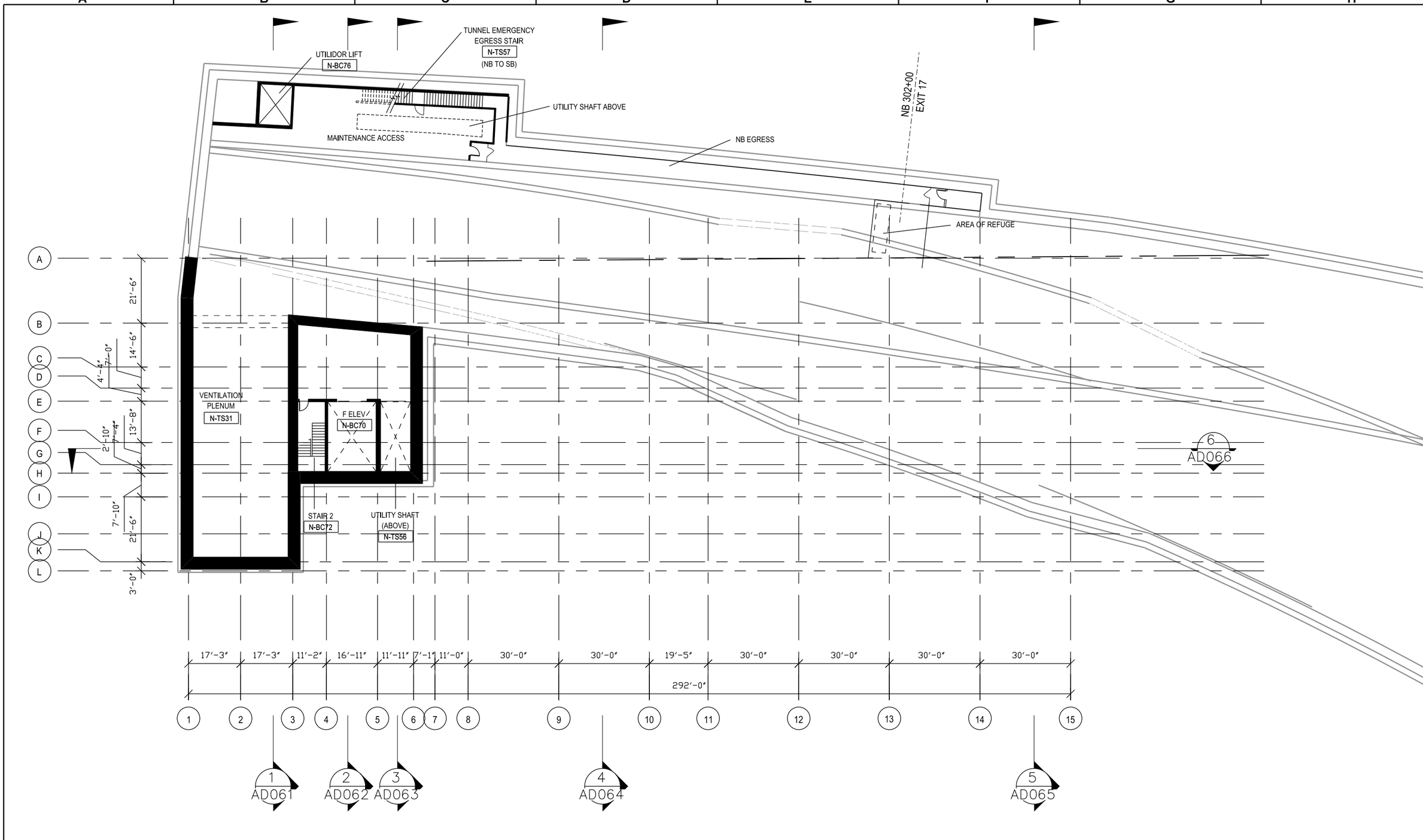

FILE NAME	IP_PWP:dms69909\46055-Nxx-14FP301a_OptM.DLV						
TIME	22-OCT-2010 06:20				REGION NO. 10	STATE WASH	FED.AID PROJ.NO.
DATE	22-OCT-2010				JOB NUMBER		
PLOTTED BY	groe						
DESIGNED BY	T. BULFIN						
ENTERED BY	W. HUI						
CHECKED BY	T. BULFIN				CONTRACT NO.		LOCATION NO.
PROJ. ENGR.	S. EVERETT						
REGIONAL ADM.	R. PAANANEN	REVISION	DATE	BY			

4367 REGISTERED ARCHITECT
TERRENCE W. BULFIN
STATE OF WASHINGTON
EXPIRES 1/6/

RFP DESIGN
SUBMITTED BY
SEATTLE TUNNEL PARTNERS

NOT FOR CONSTRUCTION

Washington State Department of Transportation
U.S. Department of Transportation Federal Highway Administration
City of Seattle

ALASKAN WAY VIADUCT
REPLACEMENT PROJECT
SR 99 BORED TUNNEL
CONTRACT PACKAGE 14

NORTH: FLOOR PLAN LEVEL –2

FP301A

SHEET 170 OF 208 SHEETS

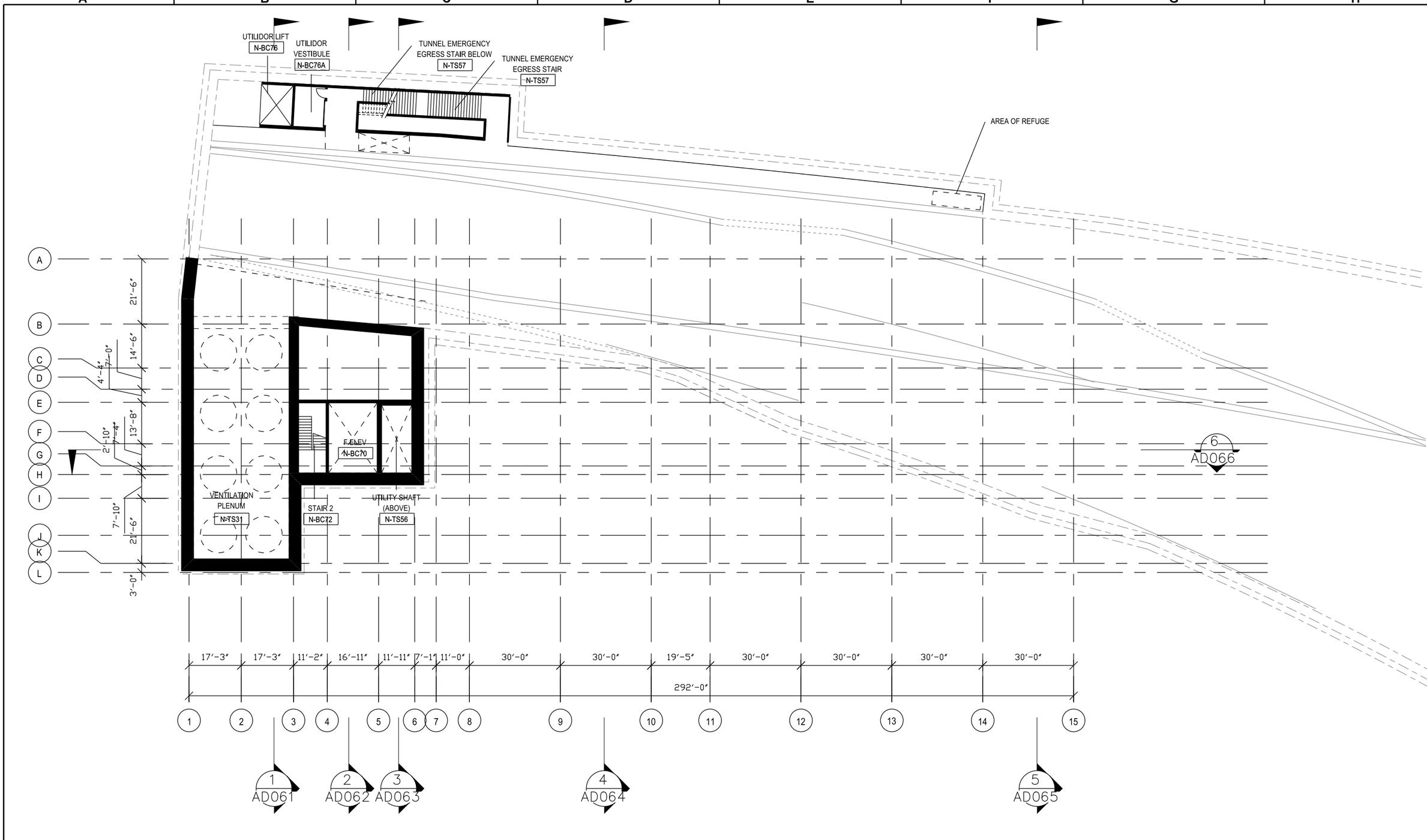

FILE NAME	IP_PWP:dms69909\46055-Nxx-14FP301b_OptM.DLV						
TIME	22-OCT-2010 06:20				REGION NO. 10	STATE WASH	FED.AID PROJ.NO.
DATE	22-OCT-2010				JOB NUMBER		
PLOTTED BY	groe						
DESIGNED BY	T. BULFIN						
ENTERED BY	W. HUI						
CHECKED BY	T. BULFIN				CONTRACT NO.		LOCATION NO.
PROJ. ENGR.	S. EVERETT						
REGIONAL ADM.	R. PAANANEN	REVISION	DATE	BY			

4367 REGISTERED ARCHITECT
TERRENCE W. BULFIN
STATE OF WASHINGTON
EXPIRES 1/6/

RFP DESIGN
SUBMITTED BY
SEATTLE TUNNEL PARTNERS

NOT FOR CONSTRUCTION

Washington State Department of Transportation
U.S. Department of Transportation Federal Highway Administration
City of Seattle

ALASKAN WAY VIADUCT REPLACEMENT PROJECT
SR 99 BORED TUNNEL
CONTRACT PACKAGE 14

NORTH: FLOOR PLAN LEVEL SB

FP301B

SHEET 171 OF 208 SHEETS

FILE NAME	IP_PWP:dms69909\46055-Nxx-14FP302_OptM.DLV
TIME	22-OCT-2010 06:20
DATE	22-OCT-2010
PLOTTED BY	groe
DESIGNED BY	T. BULFIN
ENTERED BY	W. HUI
CHECKED BY	T. BULFIN
PROJ. ENGR.	S. EVERETT
REGIONAL ADM.	R. PAANANEN

REVISION	DATE	BY

REGION NO.	STATE	FED.AID PROJ.NO.
10	WASH	
JOB NUMBER		
CONTRACT NO.		LOCATION NO.

4367 REGISTERED ARCHITECT
TERRENCE W. BULFIN
STATE OF WASHINGTON
EXPIRES 1/6/

RFP DESIGN
SUBMITTED BY
SEATTLE TUNNEL PARTNERS

NOT FOR CONSTRUCTION

Washington State Department of Transportation
U.S. Department of Transportation Federal Highway Administration
City of Seattle

ALASKAN WAY VIADUCT REPLACEMENT PROJECT
SR 99 BORED TUNNEL
CONTRACT PACKAGE 14

NORTH: FLOOR PLAN LEVEL –1

FP302

SHEET 172 OF 208 SHEETS

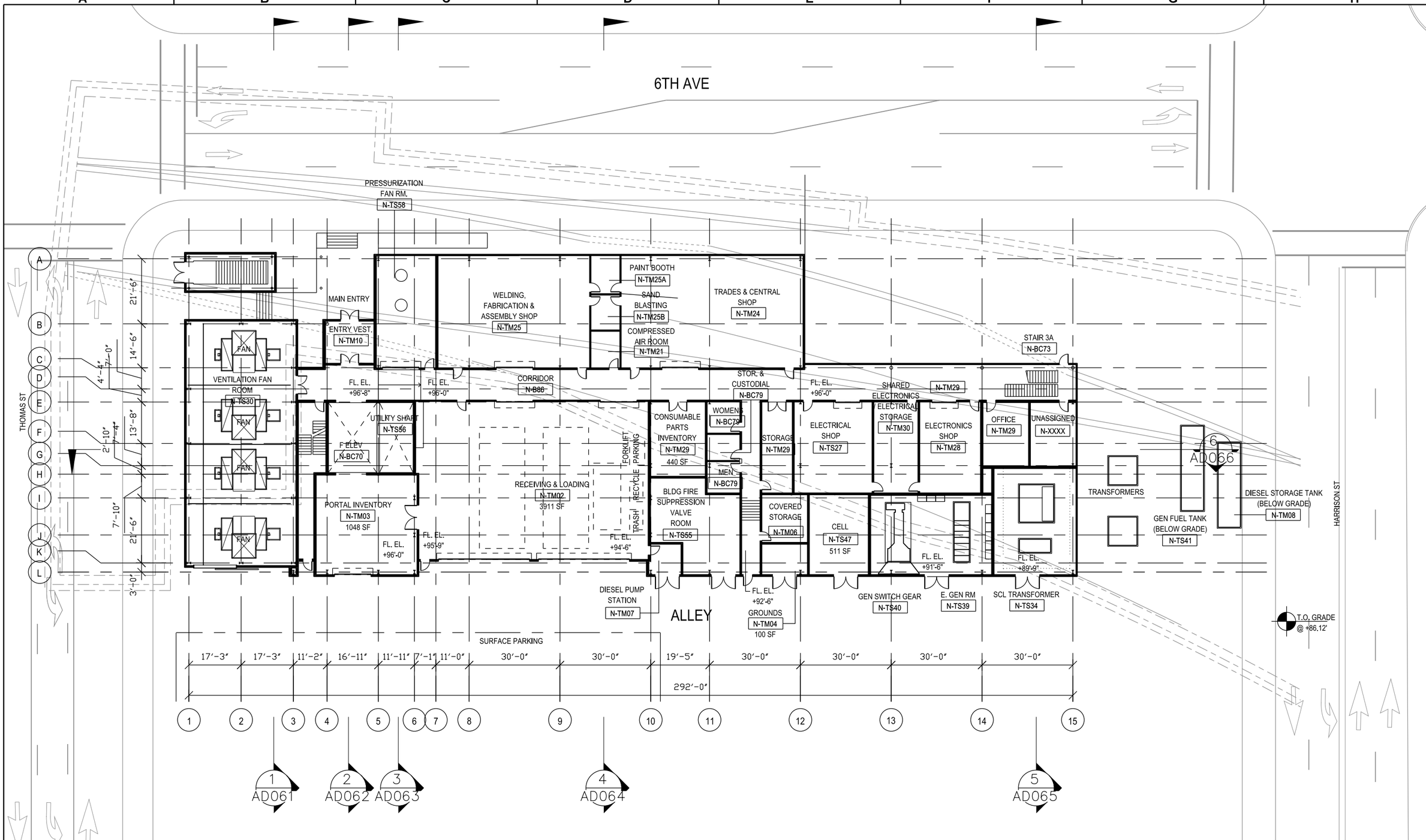

FILE NAME	IP_PWP:dms69909\46055-Nxx-14FP303_OptM.DLV					
TIME	22-OCT-2010 06:21					
DATE	22-OCT-2010					
PLOTTED BY	groe					
DESIGNED BY	T. BULFIN					
ENTERED BY	W. HUI					
CHECKED BY	T. BULFIN					
PROJ. ENGR.	S. EVERETT					
REGIONAL ADM.	R. PAANANEN	REVISION	DATE	BY		

REGION NO.	STATE	FED.AID PROJ.NO.
10	WASH	
JOB NUMBER		
CONTRACT NO.		LOCATION NO.

4367 REGISTERED ARCHITECT
TERRENCE W. BULFIN
STATE OF WASHINGTON
EXPIRES 1/6/

RFP DESIGN
SUBMITTED BY
SEATTLE TUNNEL PARTNERS

NOT FOR CONSTRUCTION

Washington State Department of Transportation
U.S. Department of Transportation Federal Highway Administration
City of Seattle

ALASKAN WAY VIADUCT REPLACEMENT PROJECT
SR 99 BORED TUNNEL
CONTRACT PACKAGE 14

NORTH: FLOOR PLAN LEVEL 1

FP303

SHEET 173 OF 208 SHEETS

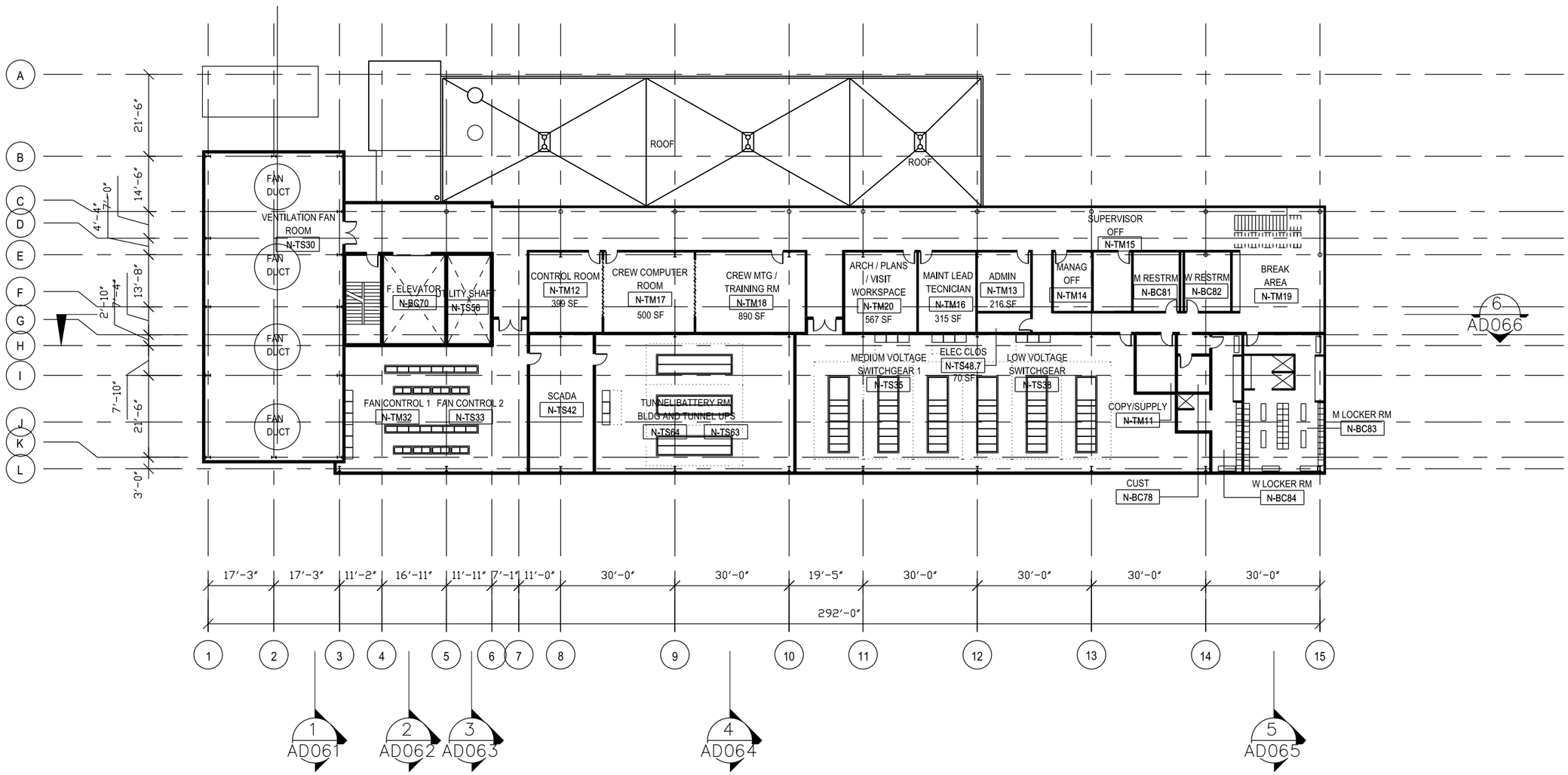

FILE NAME	IP_PWP:dms69909\46055-Nxx-14FP304_OptM.DLV				REGION NO.	STATE	FED.AID PROJ.NO.
TIME	22-OCT-2010 06:21				10	WASH	
DATE	22-OCT-2010				JOB NUMBER		
PLOTTED BY	groe						
DESIGNED BY	T. BULFIN				CONTRACT NO.		LOCATION NO.
ENTERED BY	W. HUI						
CHECKED BY	T. BULFIN						
PROJ. ENGR.	S. EVERETT						
REGIONAL ADM.	R. PAANANEN	REVISION	DATE	BY			

4367 REGISTERED ARCHITECT
TERRENCE W. BULFIN
STATE OF WASHINGTON
EXPIRES 1/6/

RFP DESIGN
SUBMITTED BY
SEATTLE TUNNEL PARTNERS

NOT FOR CONSTRUCTION

Washington State Department of Transportation
U.S. Department of Transportation Federal Highway Administration
City of Seattle

ALASKAN WAY VIADUCT
REPLACEMENT PROJECT
SR 99 BORED TUNNEL
CONTRACT PACKAGE 14

NORTH: FLOOR PLAN LEVEL 2

FP304

SHEET 174 OF 208 SHEETS

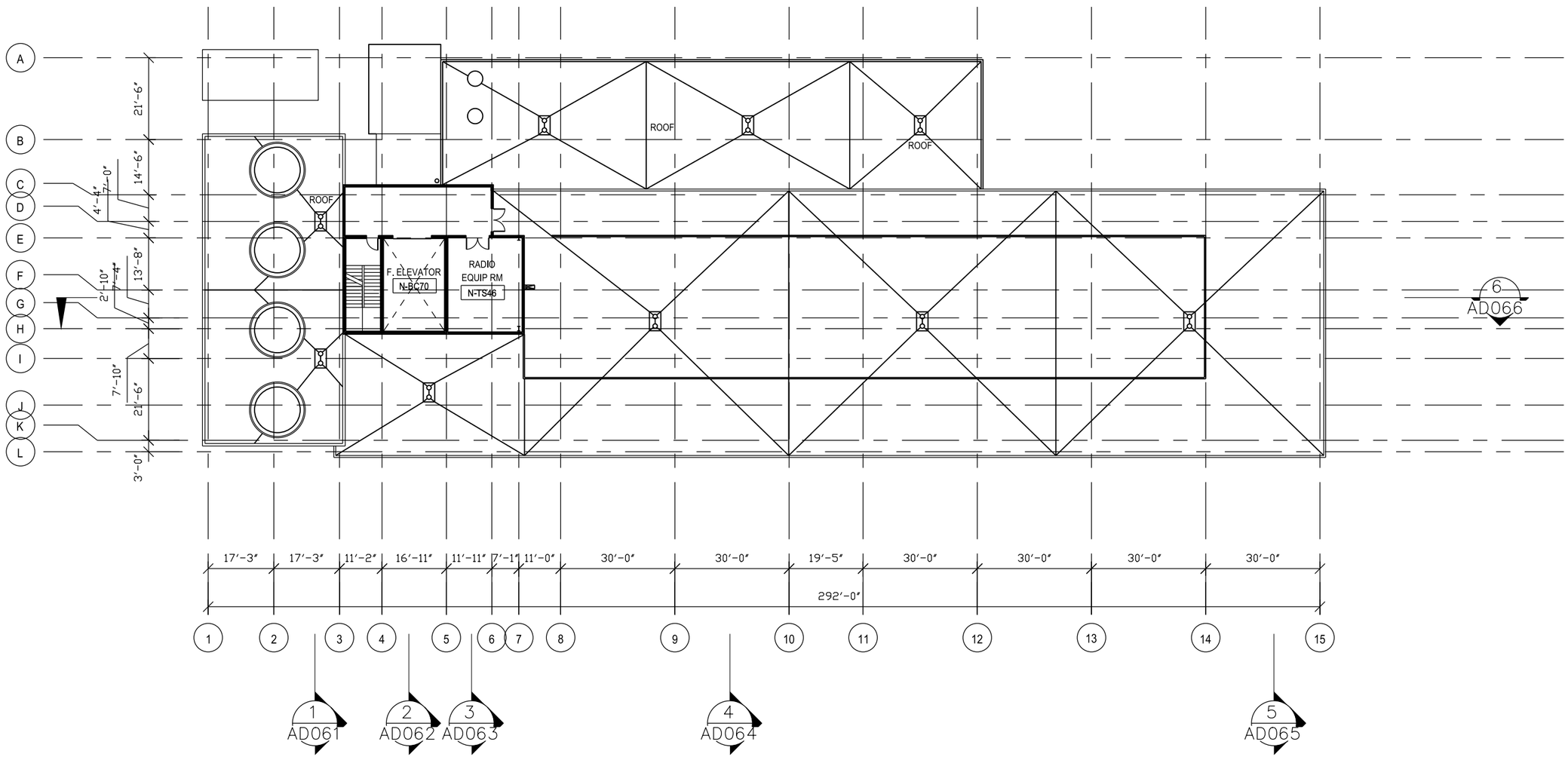

FILE NAME	IP_PWP:dms69909\46055-Nxx-14FP305_OptM.DLV				REGION NO.	STATE	FED.AID PROJ.NO.
TIME	22-OCT-2010 06:21				10	WASH	
DATE	22-OCT-2010				JOB NUMBER		
PLOTTED BY	groe						
DESIGNED BY	T. BULFIN				CONTRACT NO.		LOCATION NO.
ENTERED BY	W. HUI						
CHECKED BY	T. BULFIN						
PROJ. ENGR.	S. EVERETT						
REGIONAL ADM.	R. PAANANEN	REVISION	DATE	BY			

4367 REGISTERED ARCHITECT
TERRENCE W. BULFIN
STATE OF WASHINGTON
EXPIRES 1/6/

RFP DESIGN
SUBMITTED BY
SEATTLE TUNNEL PARTNERS

NOT FOR CONSTRUCTION

Washington State Department of Transportation
U.S. Department of Transportation Federal Highway Administration
City of Seattle

ALASKAN WAY VIADUCT
REPLACEMENT PROJECT
SR 99 BORED TUNNEL
CONTRACT PACKAGE 14

NORTH: FLOOR PLAN PENTHOUSE

FP305

SHEET 175 OF 208 SHEETS

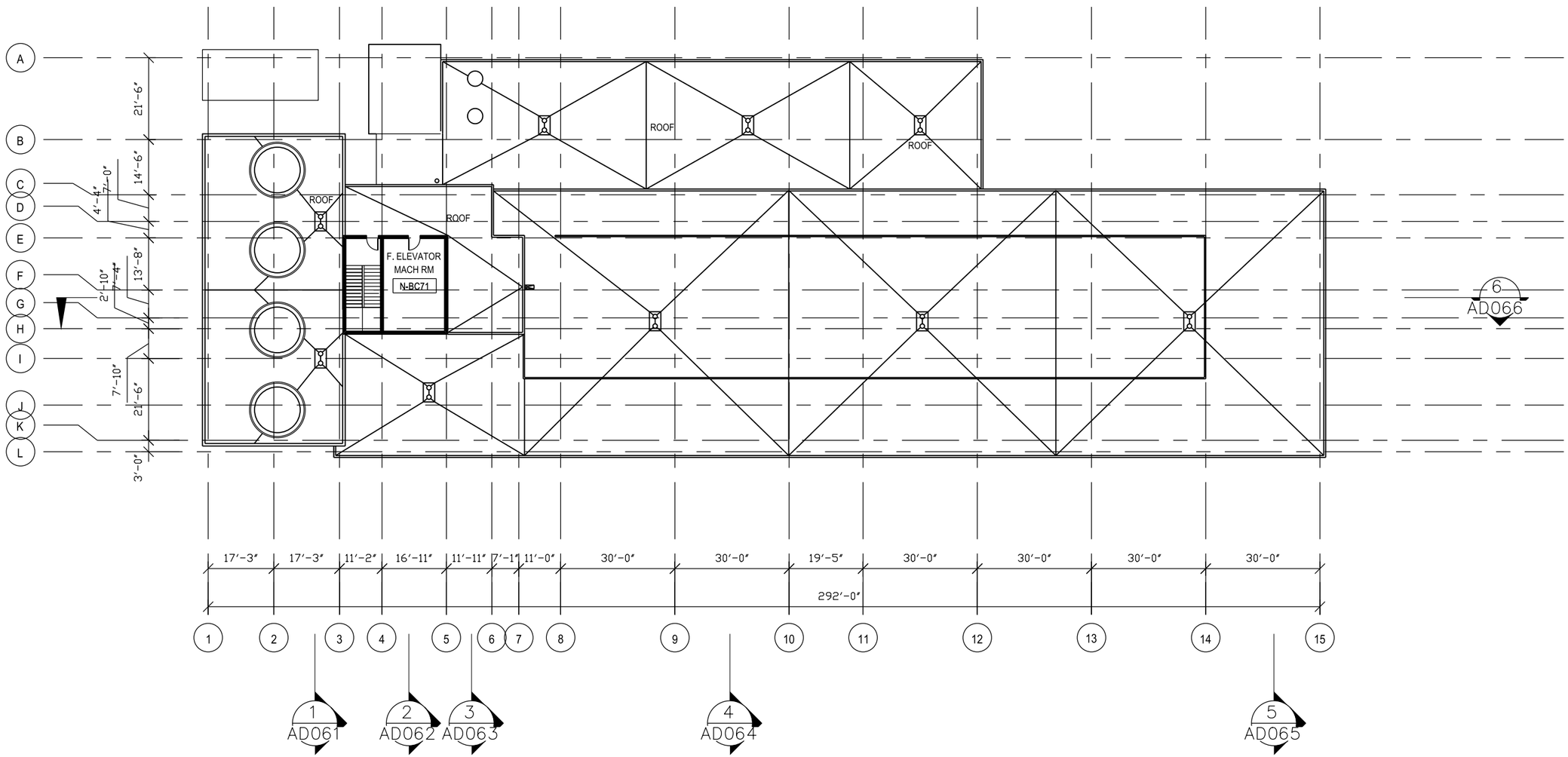

FILE NAME	IP_PWP:dms69909\46055-Nxx-14FP306_OptM.DLV				REGION NO.	STATE	FED.AID PROJ.NO.
TIME	22-OCT-2010 06:21				10	WASH	
DATE	22-OCT-2010				JOB NUMBER		
PLOTTED BY	groe						
DESIGNED BY	T. BULFIN				CONTRACT NO.		LOCATION NO.
ENTERED BY	W. HUI						
CHECKED BY	T. BULFIN						
PROJ. ENGR.	S. EVERETT						
REGIONAL ADM.	R. PAANANEN	REVISION	DATE	BY			

4367 REGISTERED ARCHITECT
TERRENCE W. BULFIN
STATE OF WASHINGTON
EXPIRES 1/6/

RFP DESIGN
SUBMITTED BY
SEATTLE TUNNEL PARTNERS

NOT FOR CONSTRUCTION

Washington State Department of Transportation
U.S. Department of Transportation Federal Highway Administration
City of Seattle

ALASKAN WAY VIADUCT
REPLACEMENT PROJECT
SR 99 BORED TUNNEL
CONTRACT PACKAGE 14

NORTH: FLOOR PLAN EMR

FP306

SHEET 176 OF 208 SHEETS

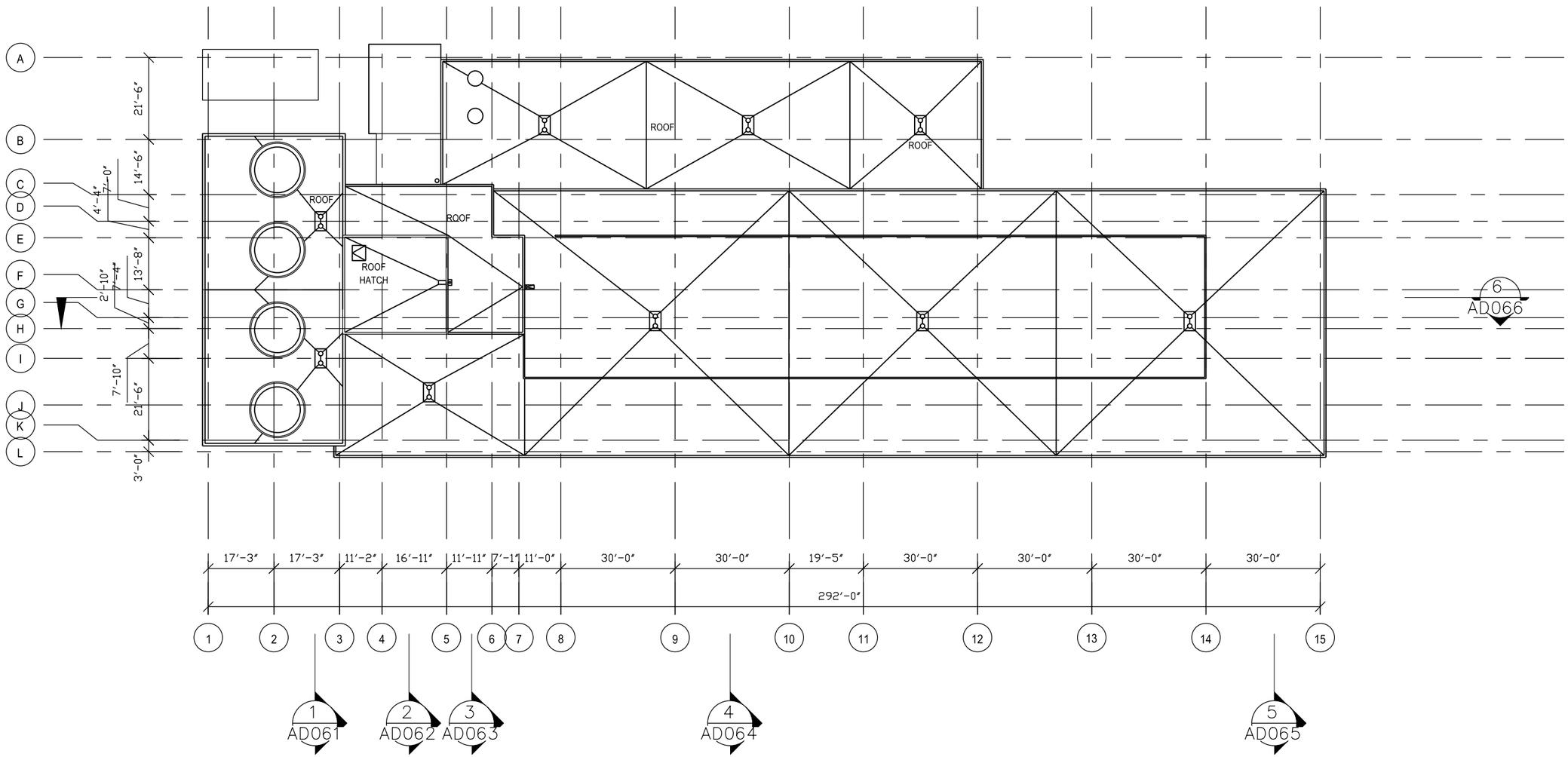

FILE NAME	IP_PWP:dms69909\46055-Nxx-14FP307_OptM.DLV				REGION NO.	STATE	FED.AID PROJ.NO.
TIME	22-OCT-2010 06:22				10	WASH	
DATE	22-OCT-2010				JOB NUMBER		
PLOTTED BY	groe						
DESIGNED BY	T. BULFIN				CONTRACT NO.		LOCATION NO.
ENTERED BY	W. HUI						
CHECKED BY	T. BULFIN						
PROJ. ENGR.	S. EVERETT						
REGIONAL ADM.	R. PAANANEN	REVISION	DATE	BY			

4367 REGISTERED ARCHITECT
TERRENCE W. BULFIN
STATE OF WASHINGTON
EXPIRES 1/6/

RFP DESIGN
SUBMITTED BY
SEATTLE TUNNEL PARTNERS

NOT FOR CONSTRUCTION

Washington State Department of Transportation
U.S. Department of Transportation Federal Highway Administration
City of Seattle

ALASKAN WAY VIADUCT
REPLACEMENT PROJECT
SR 99 BORED TUNNEL
CONTRACT PACKAGE 14

NORTH: FLOOR PLAN PENT ROOF

FP307

SHEET 177 OF 208 SHEETS

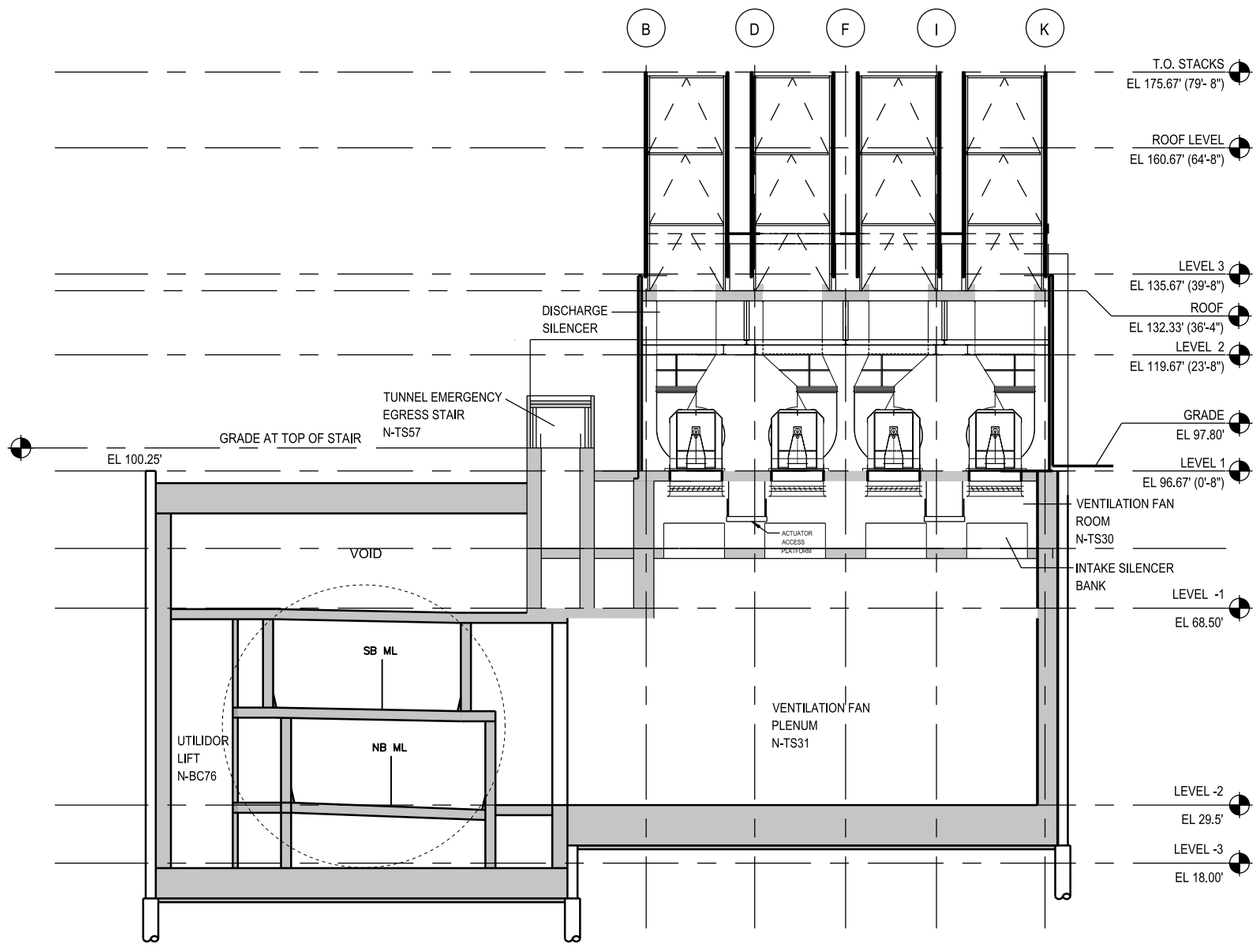

SECTION 1 AD061

0 15 30
SCALE IN FEET

NOTES:

1. THE DIMENSIONS SHOWN ARE CONCEPTUAL AND ARE PROVIDED FOR INFORMATION ONLY. THE DESIGN-BUILDER MAY NOT RELY ON DIMENSIONS SHOWN AS THE BASIS OF ITS BID. THE DIMENSIONS SHALL BE DETERMINED BY THE DESIGN-BUILDER IN ACCORDANCE WITH THE DESIGN CRITERIA.
2. THE TEMPORARY SUPPORT OF EXCAVATION WALLS SHOWN ARE CONCEPTUAL. ADDITIONAL TEMPORARY SUPPORT OF EXCAVATION WALLS MAY BE REQUIRED TO SATISFY CONSTRUCTION AND TRAFFIC STAGING.
3. SEE ARCHITECTURAL DRAWINGS FOR NORTH TUNNEL OPERATIONS BUILDING DETAILS.
4. EXISTING AND PROPOSED UTILITIES NOT SHOWN.
5. DRAWINGS SHOW FINAL CONDITION OF COMPLETED STRUCTURE ONLY AND DO NOT DISTINGUISH BETWEEN DIFFERENT CONTRACTS. TEMPORARY DETOUR AND CONSTRUCTION SEQUENCING STRUCTURES MAY ALSO BE NECESSARY AT INTERIM STAGES.
6. SURFACE ROADS AND FEATURES NOT SHOWN. FOR ADDITIONAL INFORMATION, SEE CIVIL AND URBAN DESIGN DRAWINGS.
7. ALL EXTERIOR SURFACES OF CUT-AND-COVER TUNNEL SHALL BE WATERPROOFED.
8. TEMPORARY SUPPORT OF EXCAVATION WALLS MAY BE BRACED WITH INTERNAL STRUTS OR EXTERNAL TIEBACKS. TIEBACKS MAY EXTEND BEYOND PROJECT LIMITS AND REQUIRE TEMPORARY EASEMENTS.

FILE NAME	IP_PWP:dms69909\46055-Nxx-14AD061_OptM.DLV				REGION NO. 10	STATE WASH	FED.AID PROJ.NO.
TIME	22-OCT-2010 06:22						
DATE	22-OCT-2010						
PLOTTED BY	groe				JOB NUMBER		
DESIGNED BY	T. BULFIN						
ENTERED BY	W. HUI						
CHECKED BY	T. BULFIN				CONTRACT NO.		LOCATION NO.
PROJ. ENGR.	S. EVERETT						
REGIONAL ADM.	R. PAANANEN	REVISION	DATE	BY			

4367 REGISTERED ARCHITECT
TERRENCE W. BULFIN
STATE OF WASHINGTON
EXPIRES 1/6/

RFP DESIGN
SUBMITTED BY
SEATTLE TUNNEL PARTNERS

NOT FOR CONSTRUCTION

Washington State Department of Transportation
U.S. Department of Transportation Federal Highway Administration
City of Seattle

ALASKAN WAY VIADUCT
REPLACEMENT PROJECT
SR 99 BORED TUNNEL
CONTRACT PACKAGE 14

NORTH: BUILDING SECTION 1

AD061

SHEET 178 OF 208 SHEETS

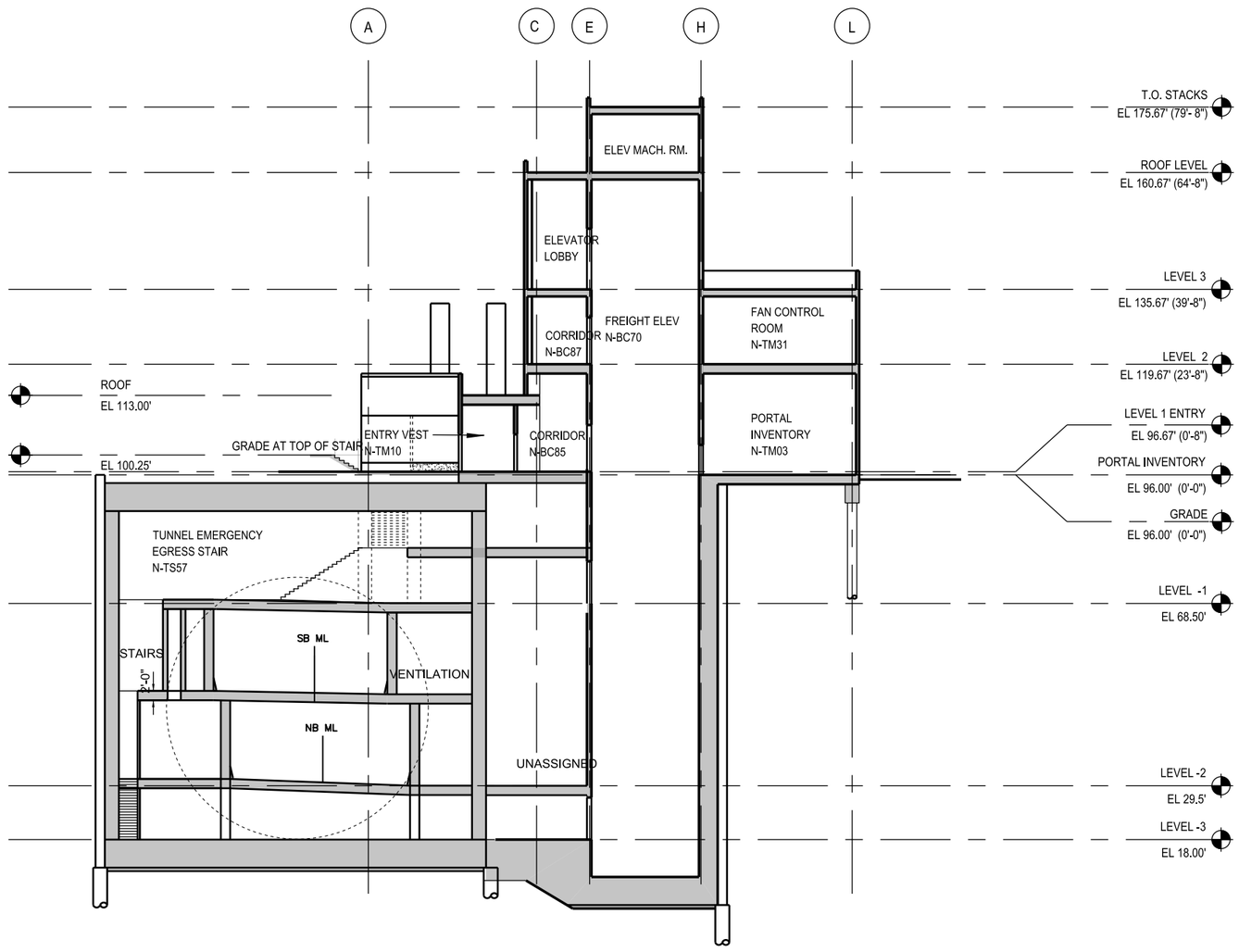

SECTION 2 AD062

0 15 30
SCALE IN FEET

NOTES:

1. THE DIMENSIONS SHOWN ARE CONCEPTUAL AND ARE PROVIDED FOR INFORMATION ONLY. THE CONTRACTOR MAY NOT RELY ON DIMENSIONS SHOWN AS THE BASIS OF ITS BID. THE DIMENSIONS SHALL BE DETERMINED BY THE CONTRACTOR IN ACCORDANCE WITH THE APPROVED DESIGN CRITERIA.

FILE NAME	IP_PWP:dms69909\46055-Nxx-14AD062_OptM.DLV				REGION NO. 10	STATE WASH
TIME	22-OCT-2010 06:22				JOB NUMBER	FED.AID PROJ.NO.
DATE	22-OCT-2010					
PLOTTED BY	groe					
DESIGNED BY	T. BULFIN					
ENTERED BY	W. HUI					
CHECKED BY	T. BULFIN				CONTRACT NO.	LOCATION NO.
PROJ. ENGR.	S. EVERETT					
REGIONAL ADM.	R. PAANANEN	REVISION	DATE	BY		

4367 REGISTERED ARCHITECT
TERRENCE W. BULFIN
STATE OF WASHINGTON
EXPIRES 1/6/

RFP DESIGN
SUBMITTED BY
SEATTLE TUNNEL PARTNERS

NOT FOR CONSTRUCTION

Washington State Department of Transportation
U.S. Department of Transportation Federal Highway Administration
City of Seattle

ALASKAN WAY VIADUCT
REPLACEMENT PROJECT
SR 99 BORED TUNNEL
CONTRACT PACKAGE 14

NORTH: BUILDING SECTION 2

AD062

SHEET 179 OF 208 SHEETS

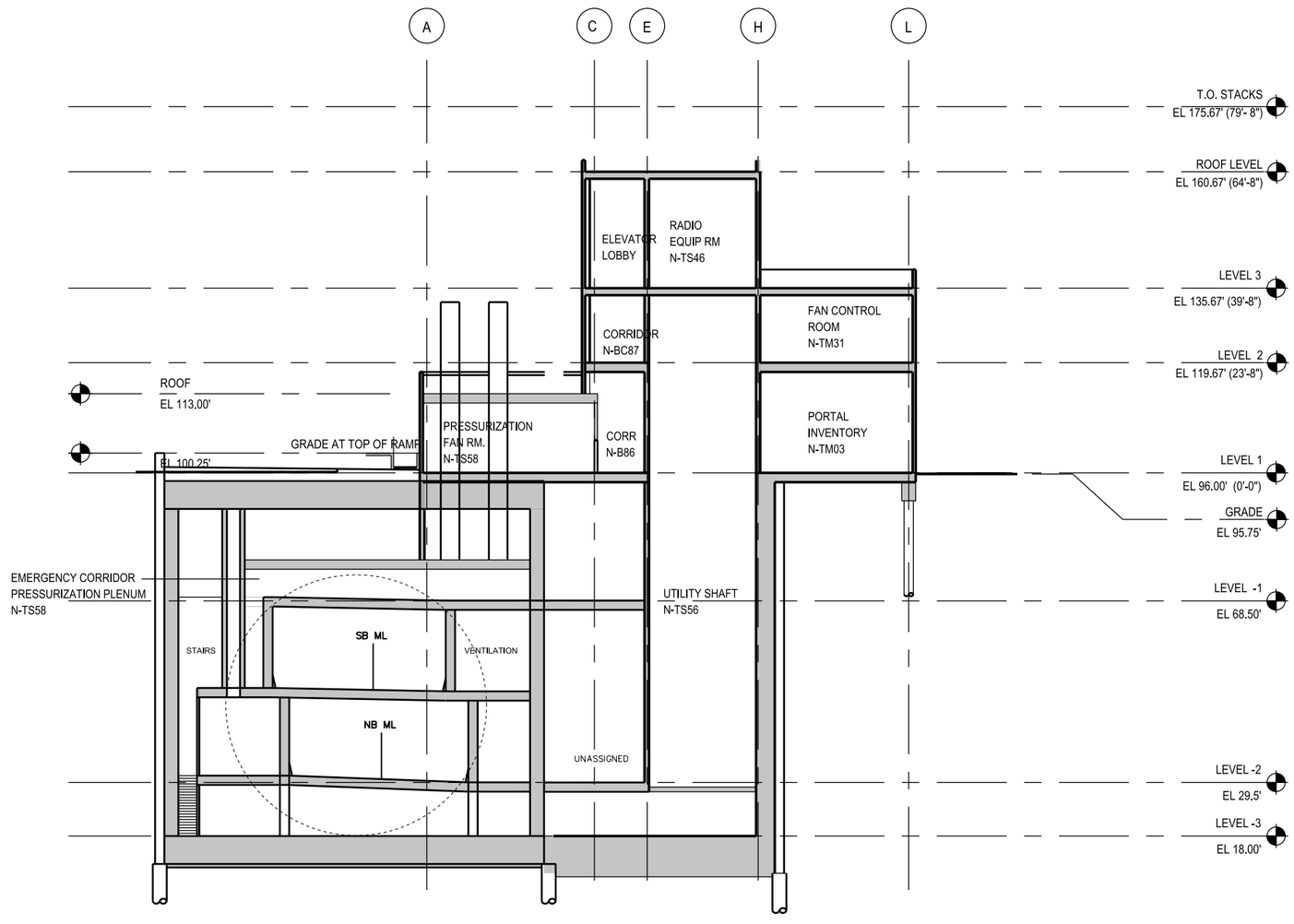

SECTION 3 / AD063

0 15 30
SCALE IN FEET

NOTES:

1. THE DIMENSIONS SHOWN ARE CONCEPTUAL AND ARE PROVIDED FOR INFORMATION ONLY. THE CONTRACTOR MAY NOT RELY ON DIMENSIONS SHOWN AS THE BASIS OF ITS BID. THE DIMENSIONS SHALL BE DETERMINED BY THE CONTRACTOR IN ACCORDANCE WITH THE APPROVED DESIGN CRITERIA.

FILE NAME	IP_PWP:dms69909\46055-Nxx-14AD063_OptM.DLV				REGION NO. 10	STATE WASH
TIME	22-OCT-2010 06:22				JOB NUMBER	FED.AID PROJ.NO.
DATE	22-OCT-2010					
PLOTTED BY	groe					
DESIGNED BY	T. BULFIN					
ENTERED BY	W. HUI					
CHECKED BY	T. BULFIN				CONTRACT NO.	LOCATION NO.
PROJ. ENGR.	S. EVERETT					
REGIONAL ADM.	R. PAANANEN	REVISION	DATE	BY		

4367 REGISTERED ARCHITECT
TERRENCE W. BULFIN
STATE OF WASHINGTON
EXPIRES 1/6/

RFP DESIGN
SUBMITTED BY
SEATTLE TUNNEL PARTNERS

NOT FOR CONSTRUCTION

Washington State Department of Transportation
U.S. Department of Transportation Federal Highway Administration
City of Seattle

ALASKAN WAY VIADUCT
REPLACEMENT PROJECT
SR 99 BORED TUNNEL
CONTRACT PACKAGE 14

NORTH: BUILDING SECTION 3

AD063

SHEET 180 OF 208 SHEETS

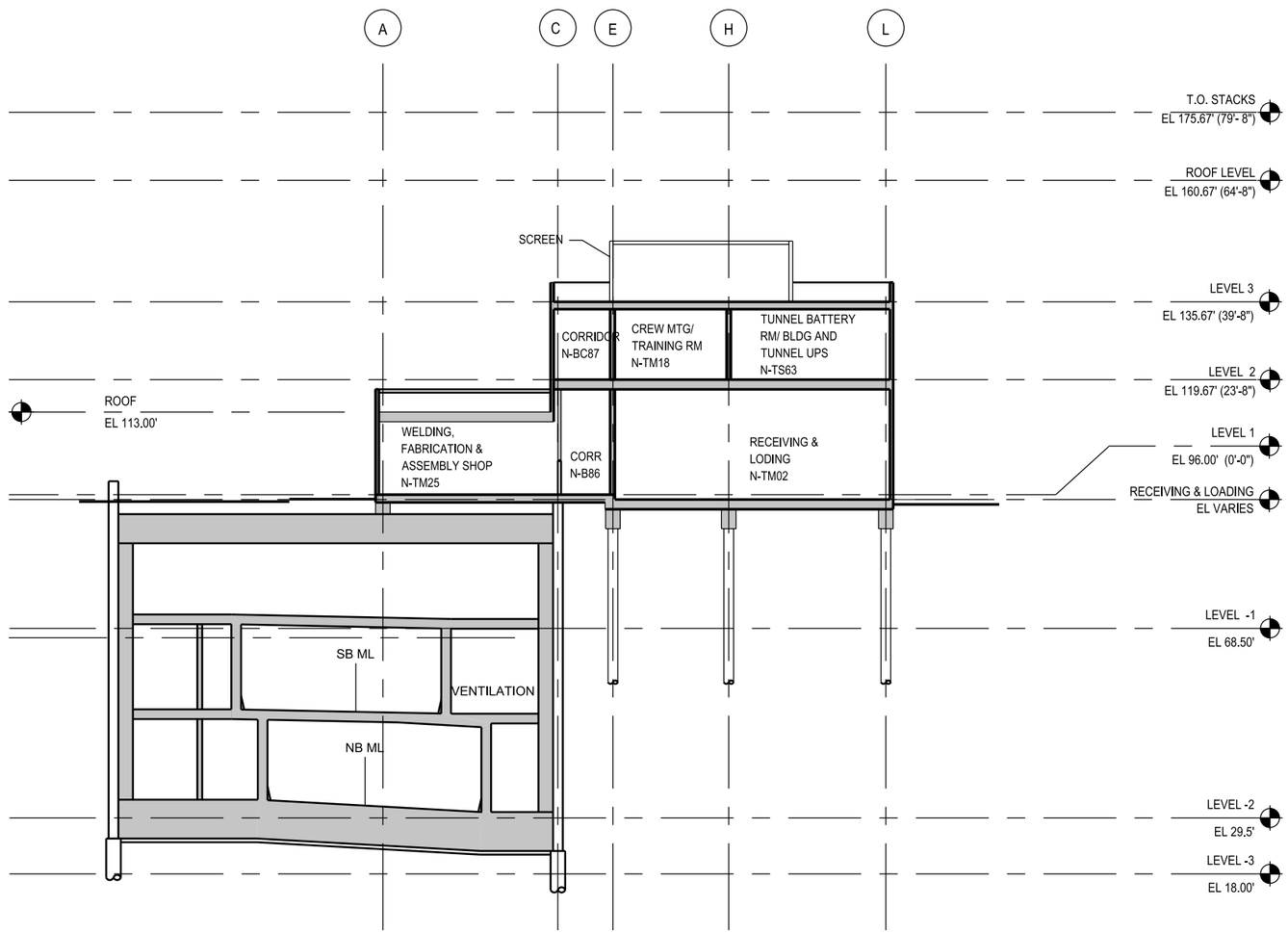

SECTION 4 AD064

0 15 30
SCALE IN FEET

NOTES:

1. THE DIMENSIONS SHOWN ARE CONCEPTUAL AND ARE PROVIDED FOR INFORMATION ONLY. THE CONTRACTOR MAY NOT RELY ON DIMENSIONS SHOWN AS THE BASIS OF ITS BID. THE DIMENSIONS SHALL BE DETERMINED BY THE CONTRACTOR IN ACCORDANCE WITH THE APPROVED DESIGN CRITERIA.

FILE NAME	IP_PWP:dms69909\46055-Nxx-14AD064_OptM.DLV					
TIME	22-OCT-2010 06:22					
DATE	22-OCT-2010					
PLOTTED BY	groe					
DESIGNED BY	T. BULFIN					
ENTERED BY	W. HUI					
CHECKED BY	T. BULFIN					
PROJ. ENGR.	S. EVERETT					
REGIONAL ADM.	R. PAANANEN	REVISION	DATE	BY		

REGION NO.	STATE	FED.AID PROJ.NO.
10	WASH	
JOB NUMBER		
CONTRACT NO.		LOCATION NO.

4367 REGISTERED ARCHITECT
TERRENCE W. BULFIN
STATE OF WASHINGTON
EXPIRES 1/6/

RFP DESIGN
SUBMITTED BY
SEATTLE TUNNEL PARTNERS

NOT FOR CONSTRUCTION

Washington State Department of Transportation
U.S. Department of Transportation Federal Highway Administration
City of Seattle

ALASKAN WAY VIADUCT
REPLACEMENT PROJECT
SR 99 BORED TUNNEL
CONTRACT PACKAGE 14

NORTH: BUILDING SECTION 4

AD064

SHEET 181 OF 208 SHEETS

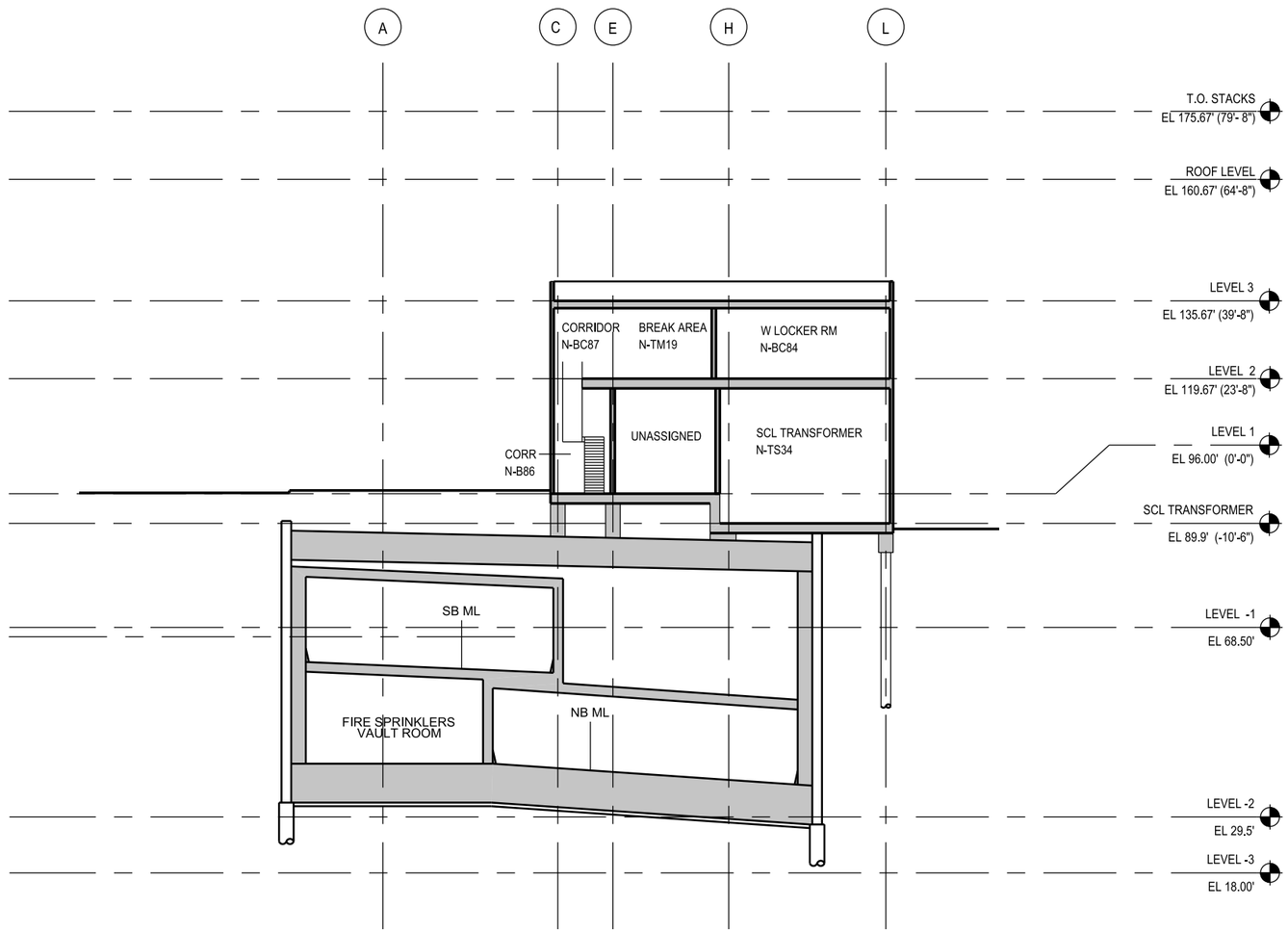

SECTION 5 / AD065

0 15 30
SCALE IN FEET

NOTES:

1. THE DIMENSIONS SHOWN ARE CONCEPTUAL AND ARE PROVIDED FOR INFORMATION ONLY. THE CONTRACTOR MAY NOT RELY ON DIMENSIONS SHOWN AS THE BASIS OF ITS BID. THE DIMENSIONS SHALL BE DETERMINED BY THE CONTRACTOR IN ACCORDANCE WITH THE APPROVED DESIGN CRITERIA.

FILE NAME	IP_PWP:dms69909\46055-Nxx-14AD065_OptM.DLV					
TIME	22-OCT-2010 06:23					
DATE	22-OCT-2010					
PLOTTED BY	groe					
DESIGNED BY	T. BULFIN					
ENTERED BY	W. HUI					
CHECKED BY	T. BULFIN					
PROJ. ENGR.	S. EVERETT					
REGIONAL ADM.	R. PAANANEN	REVISION	DATE	BY		

REGION NO.	STATE	FED.AID PROJ.NO.
10	WASH	
JOB NUMBER		
CONTRACT NO.		LOCATION NO.

4367 REGISTERED ARCHITECT
TERRENCE W. BULFIN
STATE OF WASHINGTON
EXPIRES 1/6/

RFP DESIGN
SUBMITTED BY
SEATTLE TUNNEL PARTNERS

NOT FOR CONSTRUCTION

Washington State Department of Transportation
U.S. Department of Transportation Federal Highway Administration
City of Seattle

ALASKAN WAY VIADUCT
REPLACEMENT PROJECT
SR 99 BORED TUNNEL
CONTRACT PACKAGE 14

NORTH: BUILDING SECTION 5

AD065

SHEET 182 OF 208 SHEETS

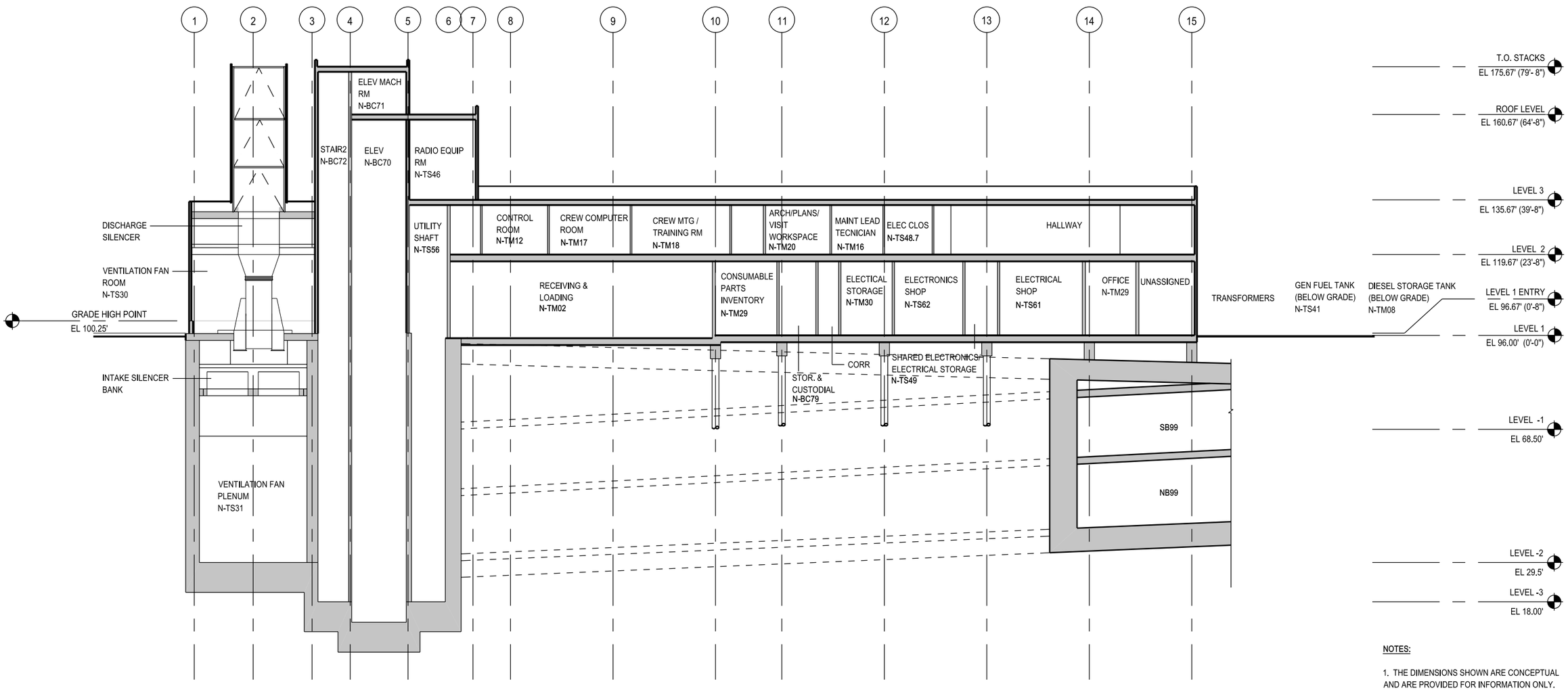

SECTION 6 AD066

NOTES:

1. THE DIMENSIONS SHOWN ARE CONCEPTUAL AND ARE PROVIDED FOR INFORMATION ONLY. THE CONTRACTOR MAY NOT RELY ON DIMENSIONS SHOWN AS THE BASIS OF ITS BID. THE DIMENSIONS SHALL BE DETERMINED BY THE CONTRACTOR IN ACCORDANCE WITH THE APPROVED DESIGN CRITERIA.

FILE NAME	IP_PWP:dms69909\46055-Nxx-14AD066_OptM.DLV				REGION NO. 10	STATE WASH	FED.AID PROJ.NO.
TIME	22-OCT-2010 06:23				JOB NUMBER		
DATE	22-OCT-2010						
PLOTTED BY	gree						
DESIGNED BY	T. BULFIN						
ENTERED BY	W. HUI						
CHECKED BY	T. BULFIN				CONTRACT NO.		LOCATION NO.
PROJ. ENGR.	S. EVERETT						
REGIONAL ADM.	R. PAANANEN	REVISION	DATE	BY			

4367 REGISTERED ARCHITECT
TERRENCE W. BULFIN STATE OF WASHINGTON
EXPIRES 1/6/

RFP DESIGN
SUBMITTED BY SEATTLE TUNNEL PARTNERS
NOT FOR CONSTRUCTION

Washington State Department of Transportation
U.S. Department of Transportation Federal Highway Administration
City of Seattle

ALASKAN WAY VIADUCT REPLACEMENT PROJECT
SR 99 BORED TUNNEL
CONTRACT PACKAGE 14

NORTH: BUILDING SECTION 6

AD066

SHEET 183 OF 208 SHEETS

CF/CI EQUIPMENT SCHEDULE	
EQ ID #	DESCRIPTION
E4	CRANE, BRIDGE, TOP RUNNING, 2 TON
E10	SHOWER, DRENCH, WITH EYE WASH
E15	REEL BANK (CA)
E16	REEL, ELECTRICAL, CABLE
E22	PRESS, BRAKE 3'x5'
E80	DUST COLLECTION SYSTEM

NIC EQUIPMENT SCHEDULE	
EQ ID #	DESCRIPTION
E5	SAW, BAND, VERTICAL
E7	DRILL PRESS, VARIABLE SPEED, 17 INCH
E9	CABINET, FLAMMABLE MATERIALS, LARGE
E13	BUFFER/GRINDER, 8 INCH, WITH PEDESTAL
E14	ROLLER, PORTABLE
E21	PARTS WASHER - SOLVENT
E31	WORKBENCH, STAINLESS STEEL, 6 FEET
E32	WORKBENCH, SEVERE USE, 8 FEET
E34	THREADER, PIPE
E35	LADDER, EXTENSION
E41	SAW, HACK, POWER, STORED IN LOCKERS
E42	PRESS, HYDRAULIC, 10 TON
E46	SAW, TABLE, 10 INCH
E47	SAW, COMPOUND MITER, SLIDING, 10 INCH W/ 16' TABLE UNDERNEATH
E52	SAW, CUTOFF, ABRASIVE, 14 INCH
E53	PUMP, AIR PISTON, 50:1, 120 LB. DRUM (CG)
E54	TANK, PARTS CLEANING
E56	SANDER, BELT/DISC, BENCH MOUNTED
E57	WELDER, OXYACETYLENE, WITH CART
E58	SANDER, BELT/DISC
F4	SHELVING UNIT, 12 INCHES
F10	TABLE, WORKSTATION, 6 FEET
S3	RACK, STORAGE, 72 BIN
S6	BOARD, PEG, TOOL
S7	SHELVING UNIT, 18 INCHES X 36 INCHES
S8	SHELVING UNIT, 24 INCHES X 72 INCHES
S10	TOOLBOX,ROLLING
S11	CABINET, STORAGE, SHOP
S12	12' STOCK WOOD RACK

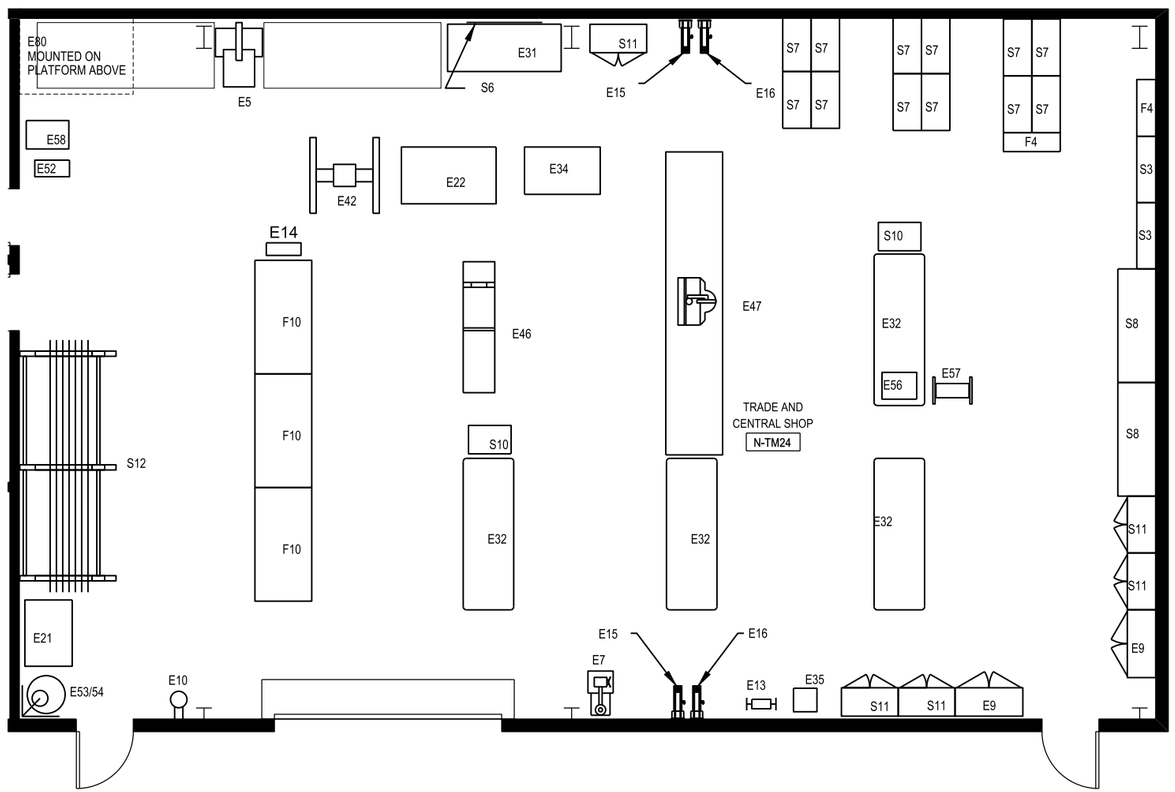

ENLARGED PLAN– SHOPS 1

0 4 8
SCALE IN FEET

FILE NAME	IP_PWP:dms69909\46055-Nxx-14AD071_OptM.DLV					
TIME	22-OCT-2010 06:23					
DATE	22-OCT-2010					
PLOTTED BY	groe					
DESIGNED BY	T. BULFIN					
ENTERED BY	W. HUI					
CHECKED BY	T. BULFIN					
PROJ. ENGR.	S. EVERETT					
REGIONAL ADM.	R. PAANANEN	REVISION	DATE	BY		

REGION NO.	STATE	FED.AID PROJ.NO.
10	WASH	
JOB NUMBER		
CONTRACT NO.		LOCATION NO.

RFP DESIGN
SUBMITTED BY
SEATTLE TUNNEL PARTNERS

NOT FOR CONSTRUCTION

Washington State Department of Transportation
U.S. Department of Transportation Federal Highway Administration
City of Seattle

ALASKAN WAY VIADUCT
REPLACEMENT PROJECT
SR 99 BORED TUNNEL
CONTRACT PACKAGE 14

NORTH: TRADE & CENTRAL SHOP

AD071

SHEET 184 OF 208 SHEETS

CF/CI EQUIPMENT SCHEDULE

EQ ID #	DESCRIPTION	EQ ID #	DESCRIPTION
E21	PARTS WASHER, AUTOMATIC, FRONT LOAD	E2	COMPRESSOR, AIR, RECEIVER MOUNTED, DUPLEX
E24	CABINET, ABRASIVE BLAST, WITH DUST COLLECTOR	E4	BRIDGE CRANE
E29	TABLE, WELDING, LAYOUT, 8 FEET	E10	SHOWER, DRENCH, WITH EYE WASH
E60	BOOTH, SPRAY, BENCH, OPEN	E15	REEL BANK (CA)
E67	DRYER, AIR, REFRIGERATED	E16	REEL, ELECTRICAL, CABLE

NIC EQUIPMENT SCHEDULE

EQ ID #	DESCRIPTION
E1	WELDER, ACETYLENE, WITH CART
E3	SAW, BAND, HORIZONTAL
E7	DRILL PRESS, VARIABLE SPEED, 17 INCH
E8	OVEN, ELECTRODE, STABILIZING
E9	CABINET, FLAMMABLE MATERIALS, LARGE
E13	BUFFER/GRINDER, 8 INCH, WITH PEDESTAL
E14	ROLLER, PORTABLE
E20	CUTTER, PLASMA
E27	BURNER, TRACK
E28	WELDER, MIG, PORTABLE
E30	WELDER, TIG
E32	WORKBENCH, SEVERE USE, 8 FEET
E59	FUME FILTER, ELECTROSTATIC, PORTABLE
S1	RACK, COAT, HOOK
S3	RACK, STORAGE, 72 BIN
S5	RACK, TOOL
S6	BOARD, PEG, TOOL
S8	SHELVING UNIT, 18 INCH
S9	RACK, 48 INCH ARM, 20 FOOT STOCK
S10	TOOLBOX,ROLLING
S11	CABINET, STORAGE, SHOP
S15	RACK, SPOOL, WIRE

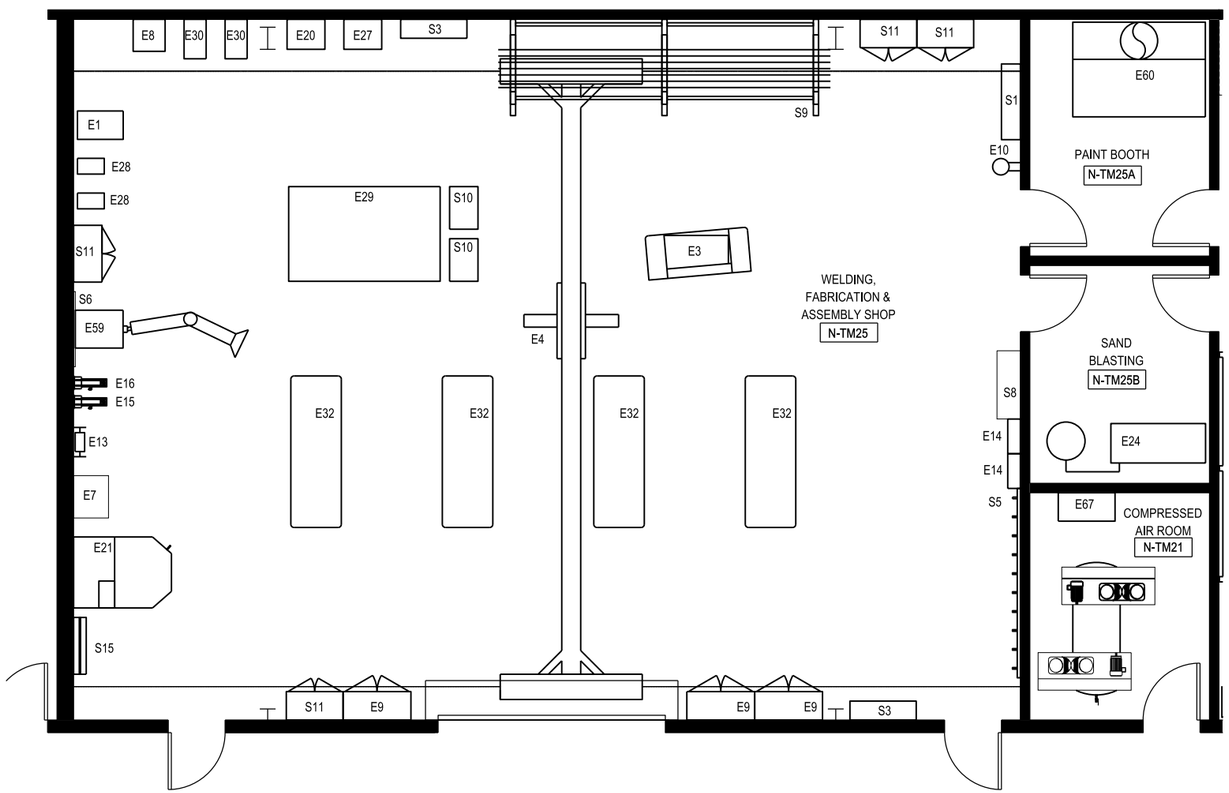

ENLARGED PLAN– SHOPS (1)

0 4 8
SCALE IN FEET

FILE NAME	IP_PWP:dms69909\46055-Nxx-14AD072_OptM.DLV
TIME	22-OCT-2010 06:23
DATE	22-OCT-2010
PLOTTED BY	groe
DESIGNED BY	T. BULFIN
ENTERED BY	W. HUI
CHECKED BY	T. BULFIN
PROJ. ENGR.	S. EVERETT
REGIONAL ADM.	R. PAANANEN

REVISION | DATE | BY

REGION NO. 10 | STATE WASH | FED.AID PROJ.NO.
JOB NUMBER
CONTRACT NO. | LOCATION NO.

4367 REGISTERED ARCHITECT
TERRENCE W. BULFIN
STATE OF WASHINGTON
EXPIRES 1/6/

RFP DESIGN
SUBMITTED BY
SEATTLE TUNNEL PARTNERS

NOT FOR CONSTRUCTION

Washington State Department of Transportation
U.S. Department of Transportation Federal Highway Administration
City of Seattle

ALASKAN WAY VIADUCT
REPLACEMENT PROJECT
SR 99 BORED TUNNEL
CONTRACT PACKAGE 14

NORTH: WELDING, ASSEMBLY, FABRICATION

AD072

SHEET 185 OF 208 SHEETS

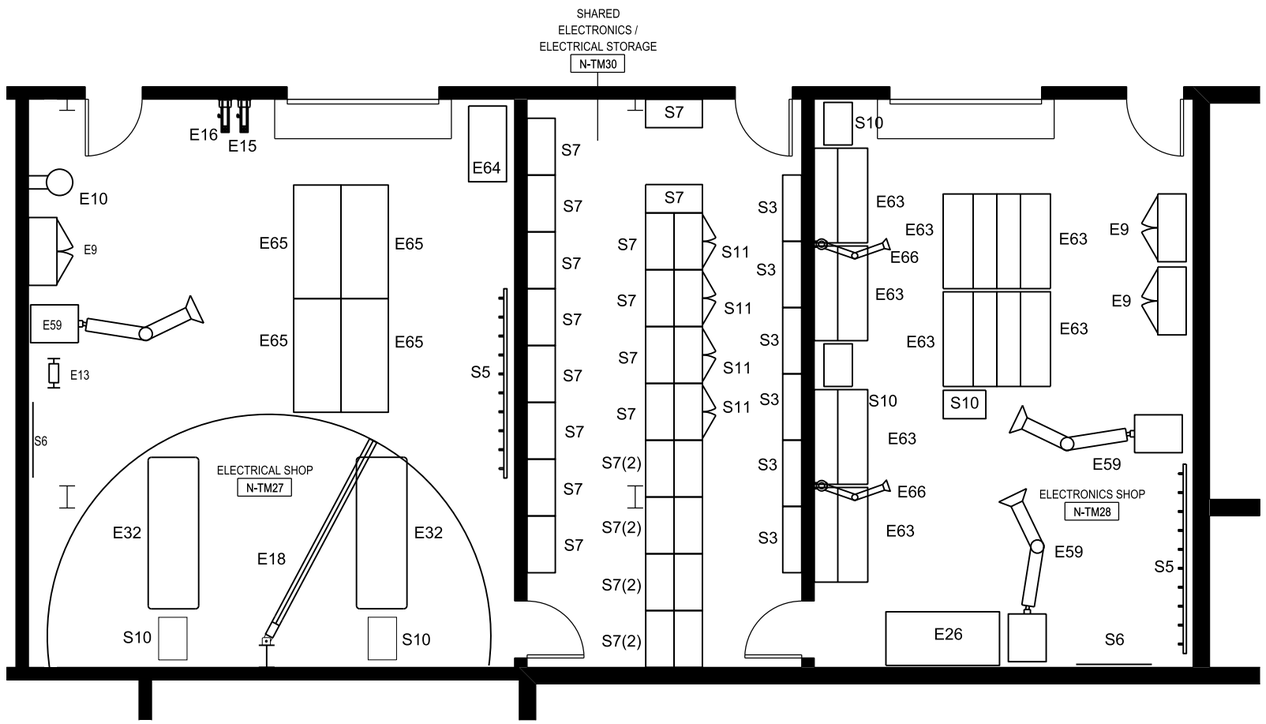

ENLARGED PLAN: ELECTRICAL SHOP AND STORAGE (1)

CF/CI EQUIPMENT SCHEDULE	
EQ ID #	DESCRIPTION
E10	SHOWER, DRENCH, WITH EYE WASH
E15	REEL BANK (CA)
E16	REEL, ELECTRICAL, CABLE
E18	CRANE, JIB, 1 TON

NIC EQUIPMENT SCHEDULE	
EQ ID #	DESCRIPTION
E9	CABINET, FLAMMABLE MATERIALS, LARGE
E13	BUFFER/GRINDER, 8 INCH, WITH PEDESTAL
E26	WORKBENCH, WOOD TOP, SOLDERING, 6 FEET
E32	WORKBENCH, SEVERE USE, 8 FEET
E59	FUME FILTER, ELECTROSTATIC, STATIC DISSIPATIVE
E63	WORKBENCH, ELECTRONICS, STATIC DISSIPATIVE
E64	CART, PARTS
E65	BENCH, TEST, ELECTRICAL, MULTI-VOLTAGE
E66	FUME EXTRACTION ARM, BENCH MOUNTED
S3	RACK, STORAGE, 72 BIN
S5	RACK, TOOL
S6	BOARD, PEG, TOOL
S7	SHELVING UNIT, 18 INCHES
S10	TOOLBOX,ROLLING
S11	CABINET, STORAGE, SHOP

0 4 8
SCALE IN FEET

FILE NAME	IP_PWP:dms69909\46055-Nxx-14AD073_OptM.DLV
TIME	22-OCT-2010 06:24
DATE	22-OCT-2010
PLOTTED BY	groe
DESIGNED BY	T. BULFIN
ENTERED BY	W. HUI
CHECKED BY	T. BULFIN
PROJ. ENGR.	S. EVERETT
REGIONAL ADM.	R. PAANANEN

REVISION | DATE | BY

REGION NO. 10 | STATE WASH | FED.AID PROJ.NO.
JOB NUMBER
CONTRACT NO. | LOCATION NO.

4367 REGISTERED ARCHITECT
TERRENCE W. BULFIN
STATE OF WASHINGTON
EXPIRES 1/6/

RFP DESIGN
SUBMITTED BY
SEATTLE TUNNEL PARTNERS
NOT FOR CONSTRUCTION

Washington State Department of Transportation
U.S. Department of Transportation Federal Highway Administration
City of Seattle

ALASKAN WAY VIADUCT
REPLACEMENT PROJECT
SR 99 BORED TUNNEL
CONTRACT PACKAGE 14

NORTH: ELECTRICAL SHOP AND STORAGE

AD073

SHEET 186 OF 208 SHEETS

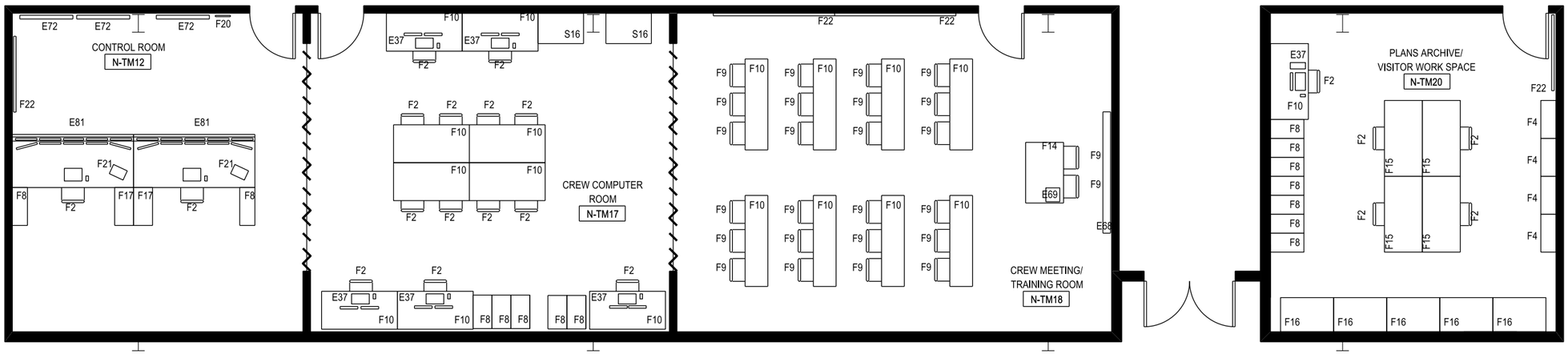

ENLARGED PLAN: PLANS ARCHIVES, CREW COMPUTER, CONTROL ROOM, AND TRAINING ROOM (1)

NIC EQUIPMENT SCHEDULE		NIC EQUIPMENT SCHEDULE		NIC EQUIPMENT SCHEDULE	
EQ ID #	DESCRIPTION	EQ ID #	DESCRIPTION	EQ ID #	DESCRIPTION
E37	COMPUTER	F8	METAL FILE CABINETS (VERTICAL)	F20	CLOCK - 24 HOUR, 18" DIAMETER
E68	MOTORIZED PROJECTION SCREEN	F9	STACKABLE CHAIR	F21	TELEPHONE
E69	DIGITAL PROJECTOR, CEILING MOUNTED	F10	WORK TABLE	F22	WHITE BOARD
E72	MONITORS, WALL HUNG, 42", LCD	F14	CONFERENCE ROOM TABLE	F23	TACK BOARD
E81	MONITORS, BANKS OF 10, DESK MOUNTED, LCD	F16	PLANS FILE	S16	CREW ROOM STORAGE CABINET
F2	OFFICE CHAIR	F17	CONTROL ROOM DESK - ELECT & DATA PORTS, SIDE PEDESTAL FILE CABINET AND SIDE BOOKCASE		
F4	OFFICE BOOKCASE				

NOTES:

1. THE DIMENSIONS SHOWN ARE CONCEPTUAL AND ARE PROVIDED FOR INFORMATION ONLY. THE CONTRACTOR MAY NOT RELY ON DIMENSIONS SHOWN AS THE BASIS OF ITS BID. THE DIMENSIONS SHALL BE DETERMINED BY THE CONTRACTOR IN ACCORDANCE WITH THE APPROVED DESIGN CRITERIA.

2. SEE DRAWINGS AD02x and AD07x FOR ENLARGED DRAWINGS OF MANDATORY SPACES.

0 4 8
SCALE IN FEET

FILE NAME	IP_PWP:dms69909\46055-Nxx-14AD074_OptM.DLV
TIME	22-OCT-2010 06:24
DATE	22-OCT-2010
PLOTTED BY	groe
DESIGNED BY	T. BULFIN
ENTERED BY	W. HUI
CHECKED BY	T. BULFIN
PROJ. ENGR.	S. EVERETT
REGIONAL ADM.	R. PAANANEN

REVISION | DATE | BY

REGION NO. 10 | STATE WASH | FED.AID PROJ.NO.
JOB NUMBER
CONTRACT NO. | LOCATION NO.

4367 REGISTERED ARCHITECT
TERRENCE W. BULFIN
STATE OF WASHINGTON
EXPIRES 1/6/

RFP DESIGN
SUBMITTED BY
SEATTLE TUNNEL PARTNERS

NOT FOR CONSTRUCTION

Washington State Department of Transportation
U.S. Department of Transportation Federal Highway Administration
City of Seattle

ALASKAN WAY VIADUCT
REPLACEMENT PROJECT
SR 99 BORED TUNNEL
CONTRACT PACKAGE 14

NORTH: CREW SPACE

AD074

SHEET 187 OF 208 SHEETS

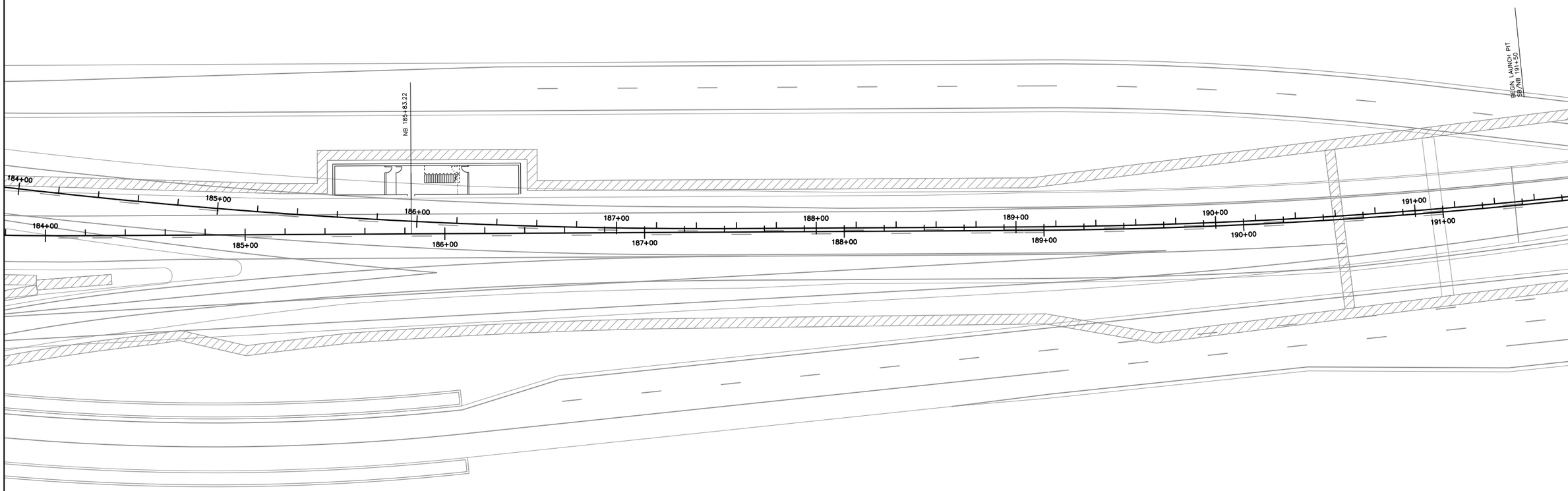

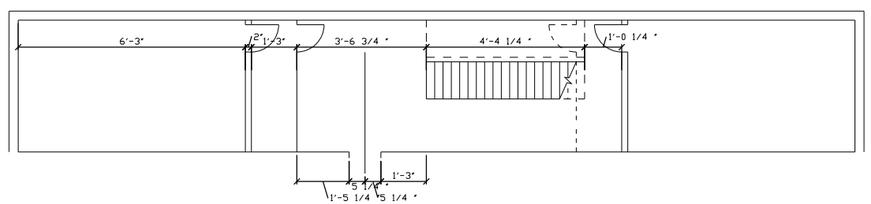

EGRESS DETAIL

0 25 50
SCALE IN FEET

FILE NAME	IP_PWP:dms69909\46055-Sxx-14AR101_OptM.DLV						
TIME	22-OCT-2010 06:24				REGION NO.	STATE	FED.AID PROJ.NO.
DATE	22-OCT-2010				10	WASH	
PLOTTED BY	groe				JOB NUMBER		
DESIGNED BY	T. BULFIN						
ENTERED BY	W. HUI						
CHECKED BY	T. BULFIN				CONTRACT NO.		LOCATION NO.
PROJ. ENGR.	S. EVERETT						
REGIONAL ADM.	R. PAANANEN	REVISION	DATE	BY			

RFP DESIGN
SUBMITTED BY
SEATTLE TUNNEL PARTNERS

NOT FOR CONSTRUCTION

Washington State Department of Transportation
U.S. Department of Transportation Federal Highway Administration
City of Seattle

ALASKAN WAY VIADUCT
REPLACEMENT PROJECT
SR 99 BORED TUNNEL
CONTRACT PACKAGE 14

SOUTH CUT & COVER EGRESS PLAN

AR101

SHEET 188 OF 208 SHEETS

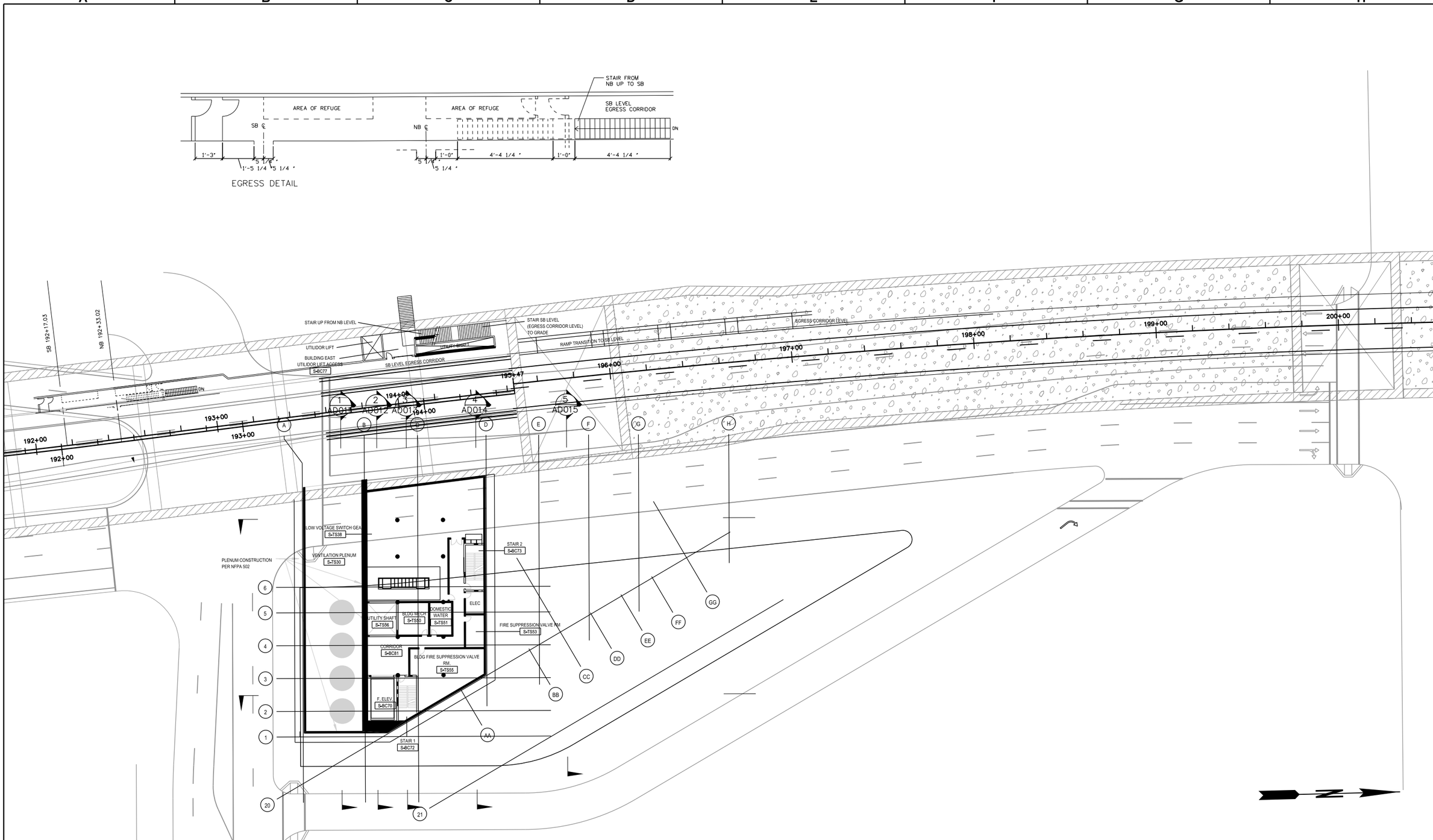

FILE NAME	IP_PWP:dms69909\46055-Sxx-14AR102_OptM.DLV				REGION NO.	STATE	FED.AID PROJ.NO.
TIME	22-OCT-2010 06:24				10	WASH	
DATE	22-OCT-2010				JOB NUMBER		
PLOTTED BY	groe						
DESIGNED BY	T. BULFIN						
ENTERED BY	W. HUI				CONTRACT NO.		LOCATION NO.
CHECKED BY	T. BULFIN						
PROJ. ENGR.	S. EVERETT						
REGIONAL ADM.	R. PAANANEN	REVISION	DATE	BY			

RFP DESIGN

SUBMITTED BY
SEATTLE TUNNEL PARTNERS

NOT FOR CONSTRUCTION

Washington State Department of Transportation

U.S. Department of Transportation
Federal Highway Administration

City of Seattle

ALASKAN WAY VIADUCT
REPLACEMENT PROJECT
SR 99 BORED TUNNEL
CONTRACT PACKAGE 14

SOUTH CUT & COVER EGRESS PLAN

AR102

SHEET 189 OF 208 SHEETS

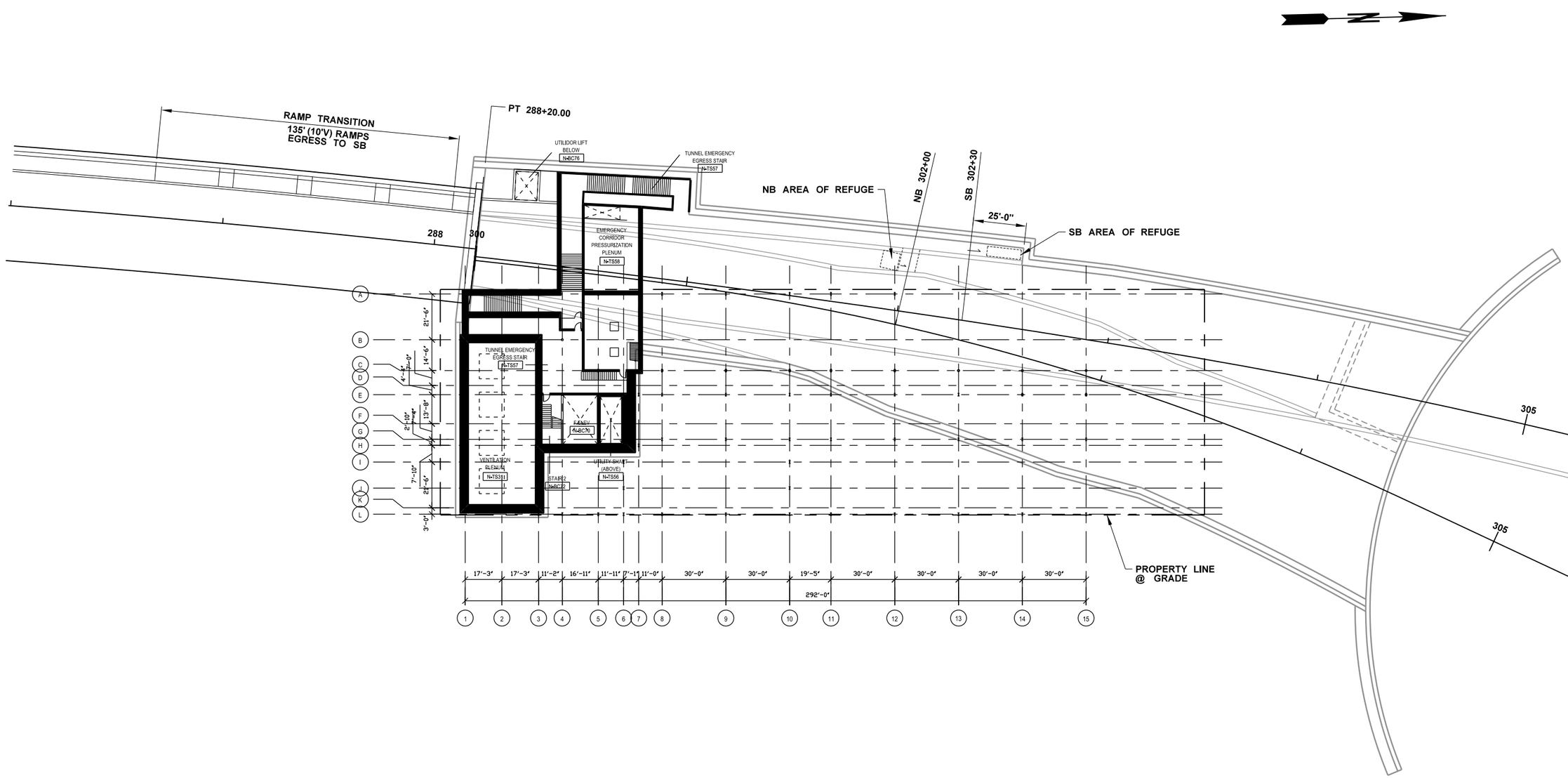

FILE NAME	IP_PWP:dms69909\46055-Nxx-14AR301_OptM.DLV			
TIME	22-OCT-2010 06:25			
DATE	22-OCT-2010			
PLOTTED BY	groe			
DESIGNED BY	T. BULFIN			
ENTERED BY	W. HUI			
CHECKED BY	T. BULFIN			
PROJ. ENGR.	S. EVERETT			
REGIONAL ADM.	R. PAANANEN	REVISION	DATE	BY

REGION NO.	STATE	FED.AID PROJ.NO.
10	WASH	
JOB NUMBER		
CONTRACT NO.		LOCATION NO.

4367 REGISTERED ARCHITECT
TERRENCE W. BULFIN
STATE OF WASHINGTON
EXPIRES 1/6/

RFP DESIGN
SUBMITTED BY
SEATTLE TUNNEL PARTNERS

NOT FOR CONSTRUCTION

Washington State Department of Transportation
U.S. Department of Transportation Federal Highway Administration
City of Seattle

ALASKAN WAY VIADUCT
REPLACEMENT PROJECT
SR 99 BORED TUNNEL
CONTRACT PACKAGE 14

NORTH CUT & COVER EGRESS PLAN

AR301

SHEET 190 OF 208 SHEETS

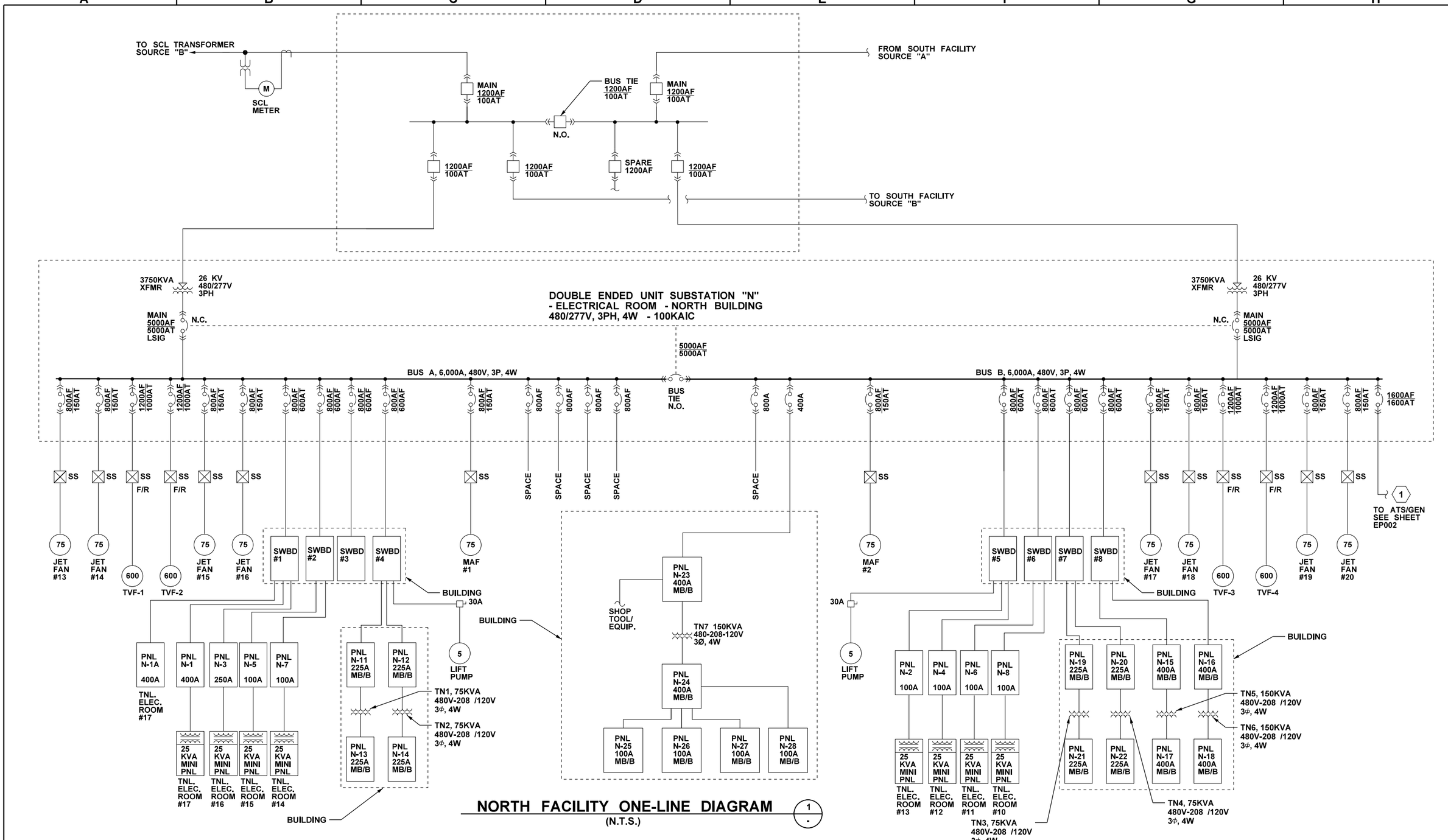

NORTH FACILITY ONE-LINE DIAGRAM

(N.T.S.)

1 / -

FILE NAME	IP_PWP:dms69911\46055-Txx-14EP001.DLV
TIME	20-OCT-2010 06:46
DATE	20-OCT-2010
PLOTTED BY	gree
DESIGNED BY	M. NAMAZI
ENTERED BY	D. BECKER
CHECKED BY	P. FORDYCE
PROJ. ENGR.	S. EVERETT
REGIONAL ADM.	R. PAANANEN

REVISION | DATE | BY

REGION NO. 10 | STATE WASH | FED.AID PROJ.NO.

JOB NUMBER

CONTRACT NO. | LOCATION NO.

PATRICIA L. FORDYCE — STATE OF WASHINGTON — 30958 — REGISTERED PROFESSIONAL ENGINEER

RFP DESIGN

SUBMITTED BY SEATTLE TUNNEL PARTNERS

NOT FOR CONSTRUCTION

Washington State Department of Transportation

U.S. Department of Transportation Federal Highway Administration

City of Seattle

ALASKAN WAY VIADUCT REPLACEMENT PROJECT
SR 99 BORED TUNNEL
CONTRACT PACKAGE 14

NORTH FACILITY ONE–LINE DIAGRAM

EP001

SHEET 191 OF 208 SHEETS

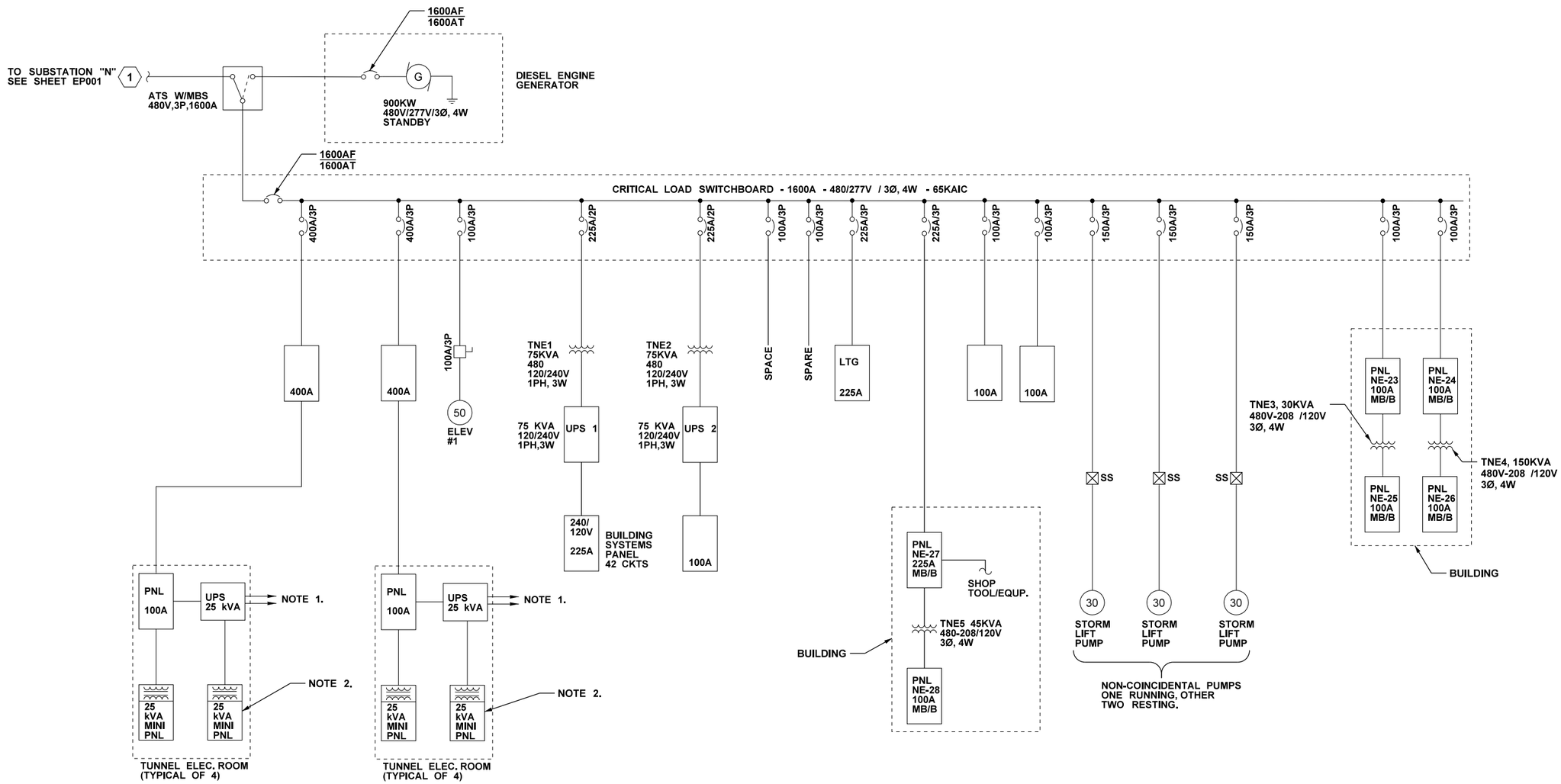

NORTH FACILITY EMERGENCY ONE-LINE DIAGRAM

(N.T.S.)

1
-

NOTES

1. FOR CONNECTION TO TUNNEL EMERGENCY LIGHTING.
2. FOR CONNECTION TO ITS, SECURITY CAMERAS, ACCESS CONTROL, COMM., SCADA, FIRE DETECTION, AND ILLUMINATED GUIDE SIGNS.

FILE NAME	IP_PWP:dms69911\46055-Txx-14EP002.DLV						
TIME	20-OCT-2010 06:47				REGION NO. 10	STATE WASH	FED.AID PROJ.NO.
DATE	20-OCT-2010				JOB NUMBER		
PLOTTED BY	groe						
DESIGNED BY	M. NAMAZI						
ENTERED BY	D. BECKER				CONTRACT NO.		LOCATION NO.
CHECKED BY	P. FORDYCE						
PROJ. ENGR.	S. EVERETT						
REGIONAL ADM.	R. PAANANEN	REVISION	DATE	BY			

PATRICIA L. FORDYCE — STATE OF WASHINGTON — 36932 — REGISTERED PROFESSIONAL ENGINEER

RFP DESIGN

SUBMITTED BY
SEATTLE TUNNEL PARTNERS

NOT FOR CONSTRUCTION

Washington State Department of Transportation

U.S. Department of Transportation Federal Highway Administration

City of Seattle

ALASKAN WAY VIADUCT
REPLACEMENT PROJECT
SR 99 BORED TUNNEL
CONTRACT PACKAGE 14

NORTH FACILITY EMERGENCY
ONE–LINE DIAGRAM

EP002

SHEET 192 OF 208 SHEETS

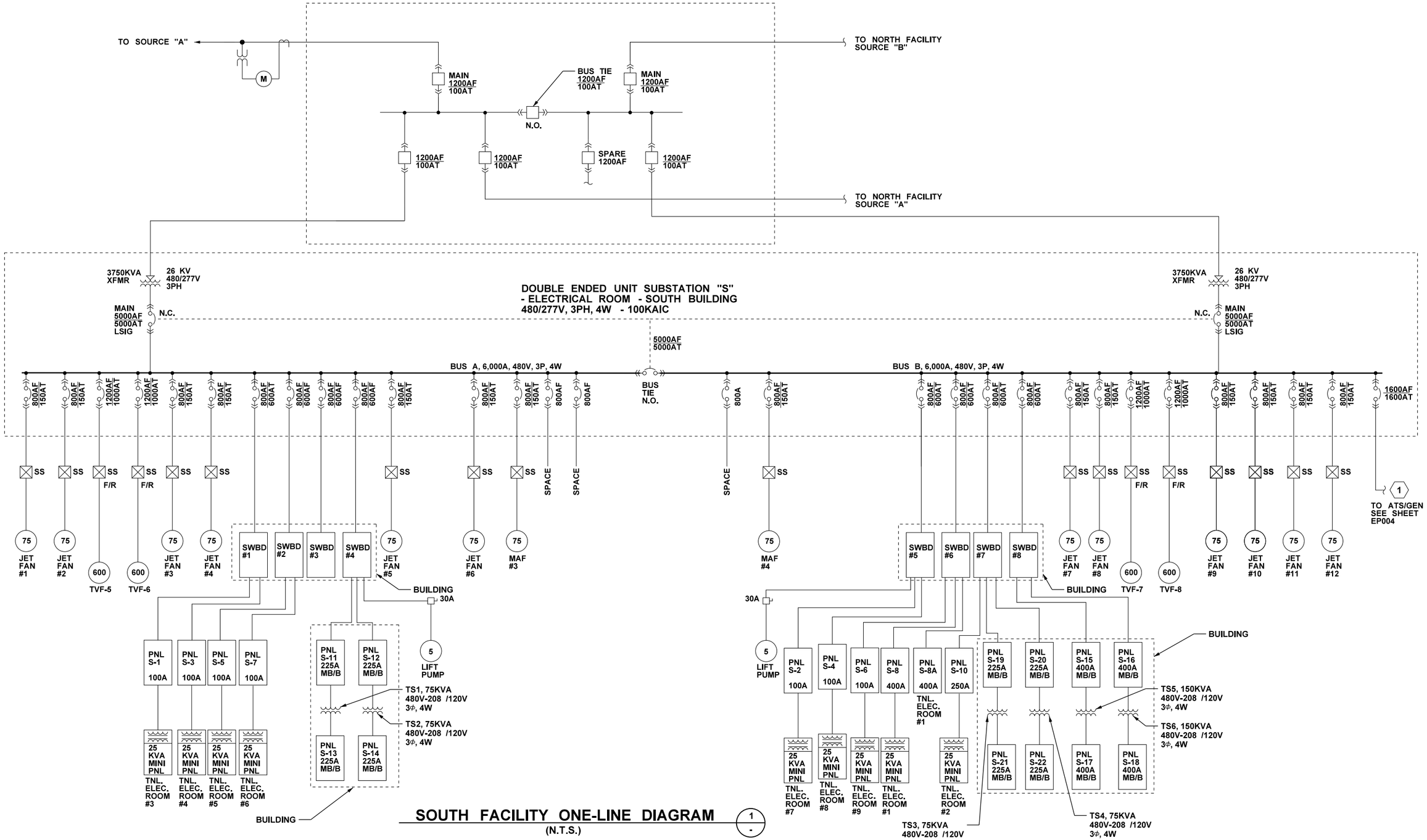

SOUTH FACILITY ONE-LINE DIAGRAM

(N.T.S.)

1 / -

FILE NAME	IP_PWP:dms69911\46055-Txx-14EP003.DLV				REGION NO. 10	STATE WASH	FED.AID PROJ.NO.
TIME	20-OCT-2010 06:47				JOB NUMBER		
DATE	20-OCT-2010				CONTRACT NO.		LOCATION NO.
PLOTTED BY	groe						
DESIGNED BY	M. NAMAZI						
ENTERED BY	D. BECKER						
CHECKED BY	P. FORDYCE						
PROJ. ENGR.	S. EVERETT						
REGIONAL ADM.	R. PAANANEN	REVISION	DATE	BY			

PATRICIA L. FORDYCE — STATE OF WASHINGTON — 20932 — REGISTERED PROFESSIONAL ENGINEER

RFP DESIGN

SUBMITTED BY SEATTLE TUNNEL PARTNERS

NOT FOR CONSTRUCTION

Washington State Department of Transportation

U.S. Department of Transportation Federal Highway Administration

City of Seattle

ALASKAN WAY VIADUCT REPLACEMENT PROJECT
SR 99 BORED TUNNEL
CONTRACT PACKAGE 14

SOUTH FACILITY ONE–LINE DIAGRAM

EP003

SHEET 193 OF 208 SHEETS

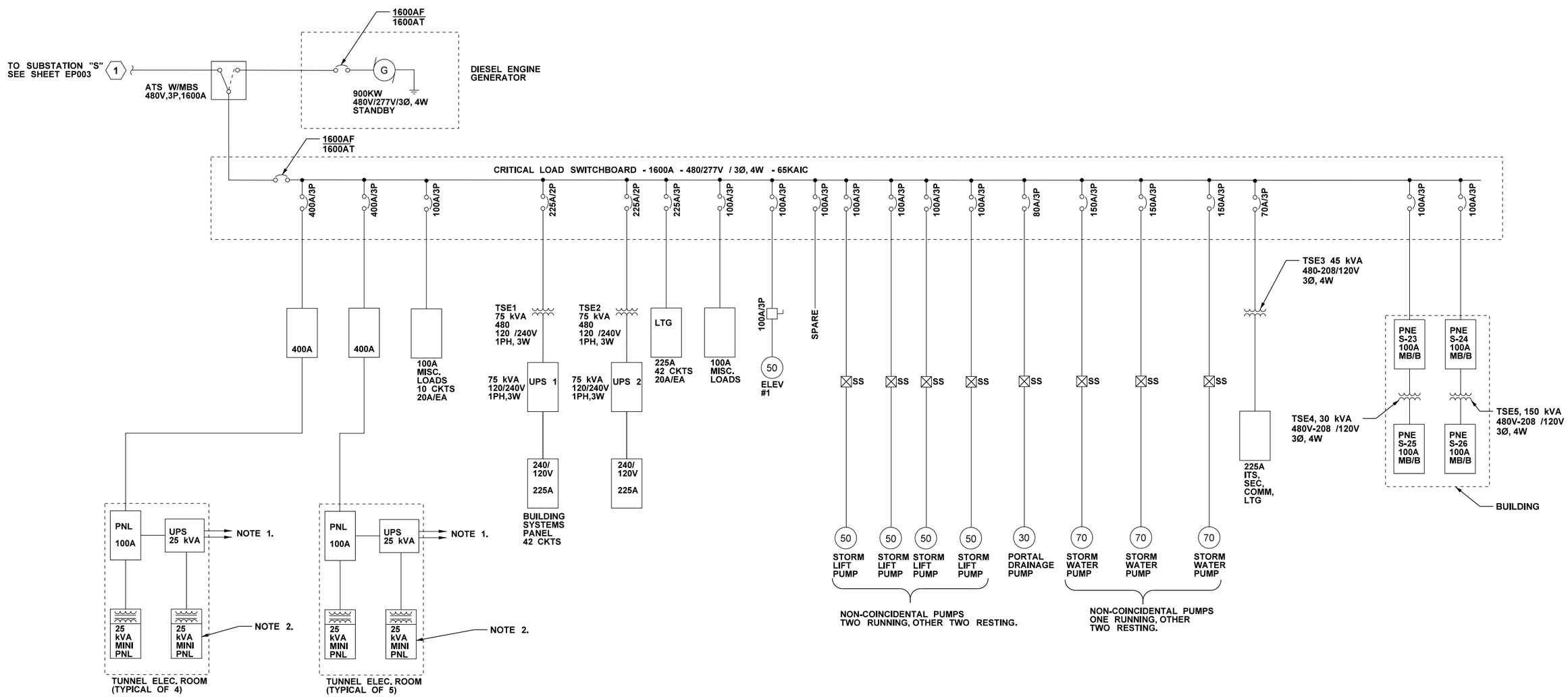

SOUTH FACILITY EMERGENCY ONE-LINE DIAGRAM

(N.T.S.)

1
-

NOTES

1. FOR CONNECTION TO TUNNEL EMERGENCY LIGHTING.
2. FOR CONNECTION TO ITS, SECURITY CAMERAS, ACCESS CONTROL, COMM., AND ILLUMINATED GUIDE SIGN.

FILE NAME	IP_PWP:dms69911\46055-Txx-14EP004.DLV						
TIME	20-OCT-2010 06:47				REGION NO. 10	STATE WASH	FED.AID PROJ.NO.
DATE	20-OCT-2010				JOB NUMBER		
PLOTTED BY	groe						
DESIGNED BY	M. NAMAZI						
ENTERED BY	D. BECKER				CONTRACT NO.		LOCATION NO.
CHECKED BY	P. FORDYCE						
PROJ. ENGR.	S. EVERETT						
REGIONAL ADM.	R. PAANANEN	REVISION	DATE	BY			

PATRICIA L. FORDYCE — STATE OF WASHINGTON — 26932 — REGISTERED PROFESSIONAL ENGINEER

RFP DESIGN

SUBMITTED BY
SEATTLE TUNNEL PARTNERS

NOT FOR CONSTRUCTION

Washington State Department of Transportation

U.S. Department of Transportation
Federal Highway Administration

City of Seattle

ALASKAN WAY VIADUCT
REPLACEMENT PROJECT
SR 99 BORED TUNNEL
CONTRACT PACKAGE 14

SOUTH FACILITY EMERGENCY
ONE–LINE DIAGRAM

EP004

SHEET 194 OF 208 SHEETS

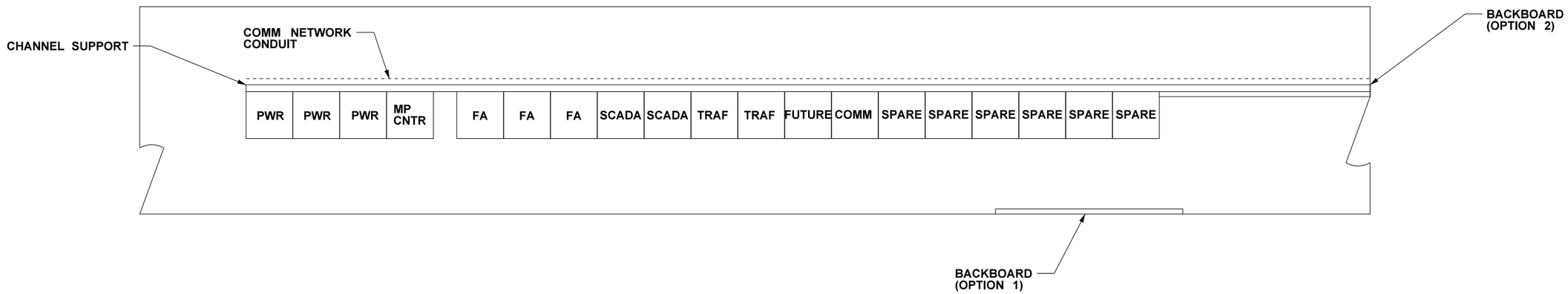

TYPICAL TUNNEL ELECTRICAL ROOM

(N.T.S.)

1 / -

FILE NAME	IP_PWP:dms69911\46055-Txx-14EP008.DLV						
TIME	20-OCT-2010 06:47				REGION NO. 10	STATE WASH	FED.AID PROJ.NO.
DATE	20-OCT-2010						
PLOTTED BY	groe				JOB NUMBER		
DESIGNED BY	M. MAUNG						
ENTERED BY	D. BECKER						
CHECKED BY	C. AYUBI				CONTRACT NO.	LOCATION NO.	
PROJ. ENGR.	S. EVERETT						
REGIONAL ADM.	R. PAANANEN	REVISION	DATE	BY			

PATRICIA L. FORDYCE — STATE OF WASHINGTON — 26953 — REGISTERED PROFESSIONAL ENGINEER

RFP DESIGN

SUBMITTED BY
SEATTLE TUNNEL PARTNERS

NOT FOR CONSTRUCTION

Washington State Department of Transportation

U.S. Department of Transportation
Federal Highway Administration

City of Seattle

ALASKAN WAY VIADUCT
REPLACEMENT PROJECT
SR 99 BORED TUNNEL
CONTRACT PACKAGE 14

TYPICAL TUNNEL
ELECTRICAL ROOM

EP008

SHEET 195 OF 208 SHEETS

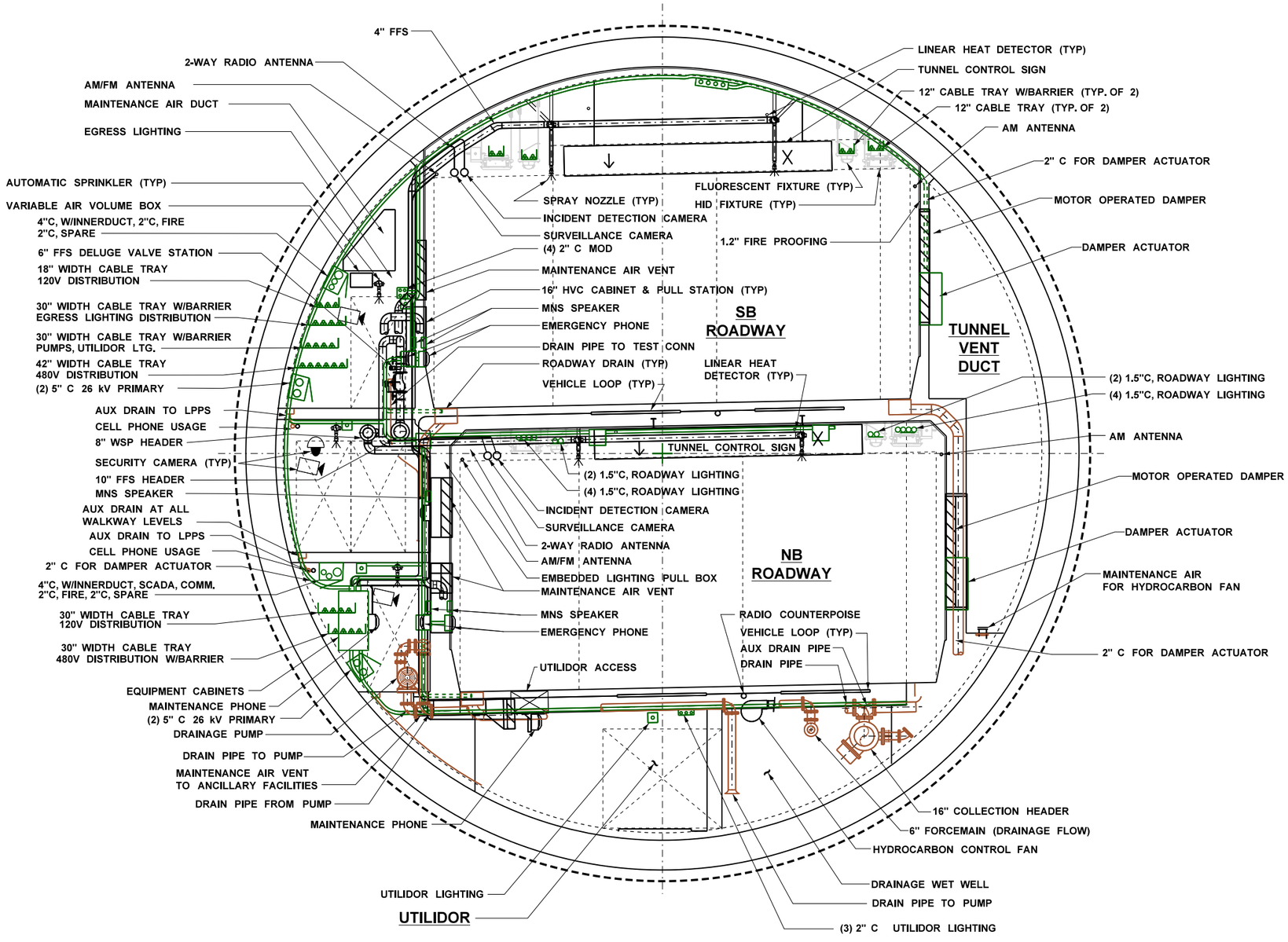

FILE NAME	IP_PWP:dms69911\46055-Txx-14EP009.DLV				REGION NO.	STATE	FED.AID PROJ.NO.
TIME	20-OCT-2010 06:47				10	WASH	
DATE	20-OCT-2010				JOB NUMBER		
PLOTTED BY	gree						
DESIGNED BY	P. FORDYCE						
ENTERED BY	D. BECKER				CONTRACT NO.		LOCATION NO.
CHECKED BY	P. FORDYCE						
PROJ. ENGR.	S. EVERETT						
REGIONAL ADM.	R. PAANANEN	REVISION	DATE	BY			

PATRICIA L. FORDYCE STATE OF WASHINGTON 26932 REGISTERED PROFESSIONAL ENGINEER

RFP DESIGN
SUBMITTED BY
SEATTLE TUNNEL PARTNERS

NOT FOR CONSTRUCTION

Washington State Department of Transportation
U.S. Department of Transportation Federal Highway Administration
City of Seattle

ALASKAN WAY VIADUCT
REPLACEMENT PROJECT
SR 99 BORED TUNNEL
CONTRACT PACKAGE 14

BORED TUNNEL CROSS SECTION

EP009

SHEET 196 OF 208 SHEETS

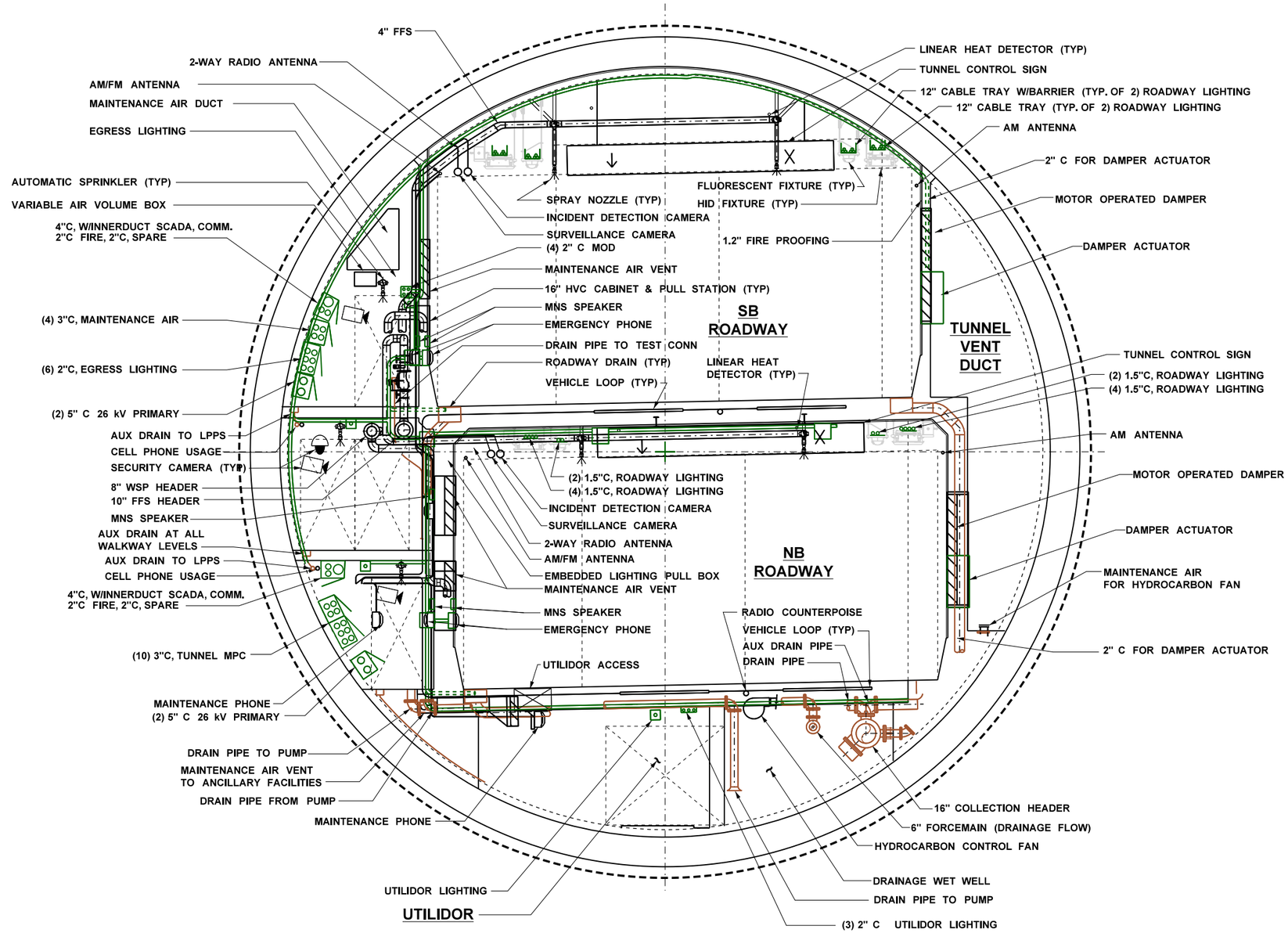

FILE NAME	IP_PWP:dms69911\46055-Txx-14EP010.DLV						
TIME	20-OCT-2010 06:48				REGION NO. 10	STATE WASH	FED.AID PROJ.NO.
DATE	20-OCT-2010						
PLOTTED BY	groe				JOB NUMBER		
DESIGNED BY	P. FORDYCE						
ENTERED BY	D. BECKER				CONTRACT NO.		LOCATION NO.
CHECKED BY	P. FORDYCE						
PROJ. ENGR.	S. EVERETT						
REGIONAL ADM.	R. PAANANEN	REVISION	DATE	BY			

PATRICIA L. FORDYCE — STATE OF WASHINGTON — 26052 — REGISTERED PROFESSIONAL ENGINEER

RFP DESIGN
SUBMITTED BY
SEATTLE TUNNEL PARTNERS

NOT FOR CONSTRUCTION

Washington State Department of Transportation
U.S. Department of Transportation Federal Highway Administration
City of Seattle

ALASKAN WAY VIADUCT
REPLACEMENT PROJECT
SR 99 BORED TUNNEL
CONTRACT PACKAGE 14

BORED TUNNEL CROSS SECTION
EGRESS CORRIDOR

EP010

SHEET 197 OF 208 SHEETS

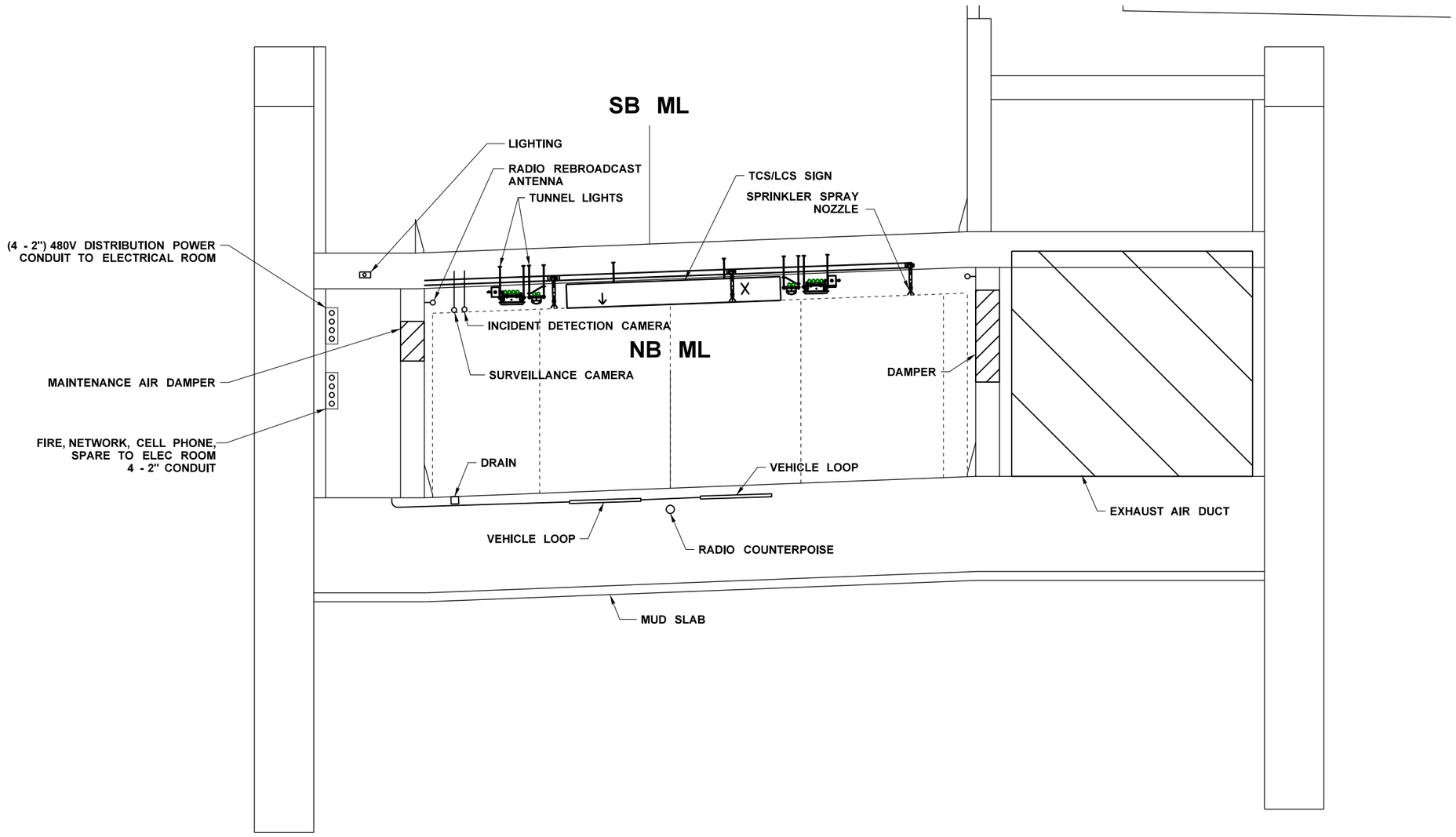

NOTE:
ELECTRICAL AND MECHANICAL
ARE COMBINED FOR SPACE PROOFING.

CUT AND COVER SECTION STA 190+00

(N.T.S.)

1 / -

FILE NAME	IP_PWP:dms69911\46055-Txx-14EP011.DLV				REGION NO.	STATE	FED.AID PROJ.NO.
TIME	20-OCT-2010 06:48				10	WASH	
DATE	20-OCT-2010				JOB NUMBER		
PLOTTED BY	groe						
DESIGNED BY	K. HOUGH						
ENTERED BY	D. BECKER				CONTRACT NO.		LOCATION NO.
CHECKED BY	P. FORDYCE						
PROJ. ENGR.	S. EVERETT						
REGIONAL ADM.	R. PAANANEN	REVISION	DATE	BY			

PATRICIA L. FORDYCE — STATE OF WASHINGTON — 26932 — REGISTERED PROFESSIONAL ENGINEER

RFP DESIGN
SUBMITTED BY
SEATTLE TUNNEL PARTNERS

NOT FOR CONSTRUCTION

Washington State Department of Transportation
U.S. Department of Transportation Federal Highway Administration
City of Seattle

ALASKAN WAY VIADUCT
REPLACEMENT PROJECT
SR 99 BORED TUNNEL
CONTRACT PACKAGE 14

CUT AND COVER CROSS SECTION

EP011

SHEET 198 OF 208 SHEETS

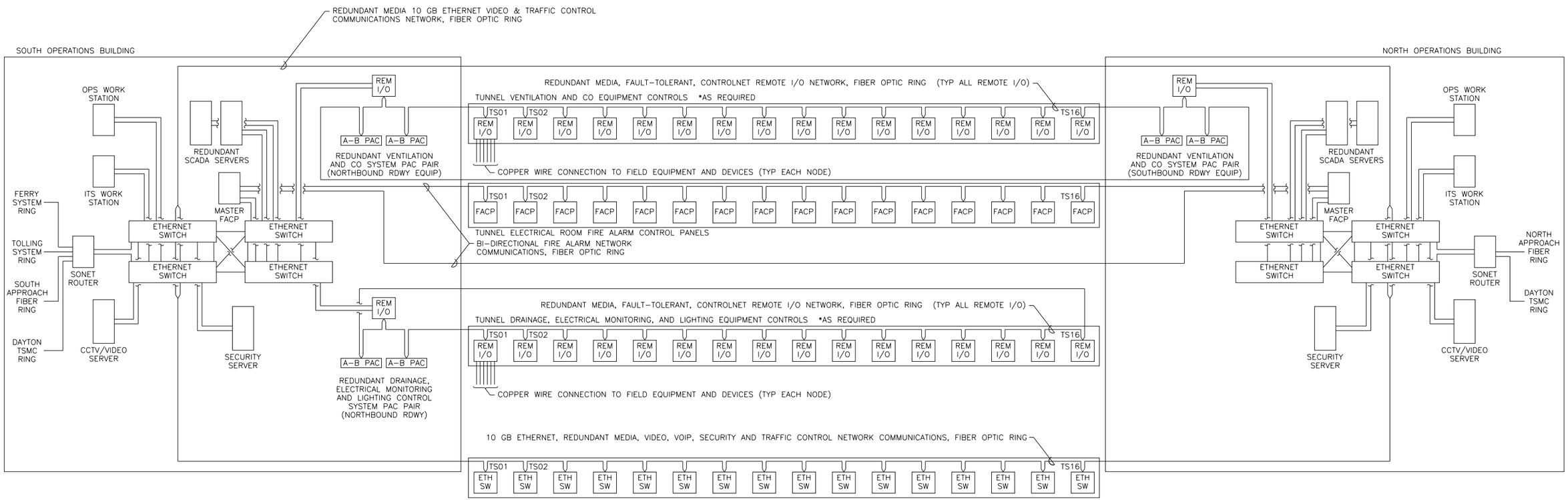

SCADA BLOCK DIAGRAM

(N.T.S.)

1 / -

FILE NAME	IP_PWP:dms69911\46055-Txx-14EL001.DLV				REGION NO.	STATE	FED.AID PROJ.NO.
TIME	20-OCT-2010 06:48				10	WASH	
DATE	20-OCT-2010				JOB NUMBER		
PLOTTED BY	groe						
DESIGNED BY	T. KINLEY						
ENTERED BY	D. BECKER				CONTRACT NO.		LOCATION NO.
CHECKED BY	P. FORDYCE						
PROJ. ENGR.	S. EVERETT						
REGIONAL ADM.	R. PAANANEN	REVISION	DATE	BY			

PATRICIA L. FORDYCE — STATE OF WASHINGTON — 26932 — REGISTERED PROFESSIONAL ENGINEER

RFP DESIGN

SUBMITTED BY SEATTLE TUNNEL PARTNERS

NOT FOR CONSTRUCTION

Washington State Department of Transportation

U.S. Department of Transportation Federal Highway Administration

City of Seattle

ALASKAN WAY VIADUCT REPLACEMENT PROJECT
SR 99 BORED TUNNEL
CONTRACT PACKAGE 14

SCADA SCHEMATIC DIAGRAM

EL001

SHEET 199 OF 208 SHEETS

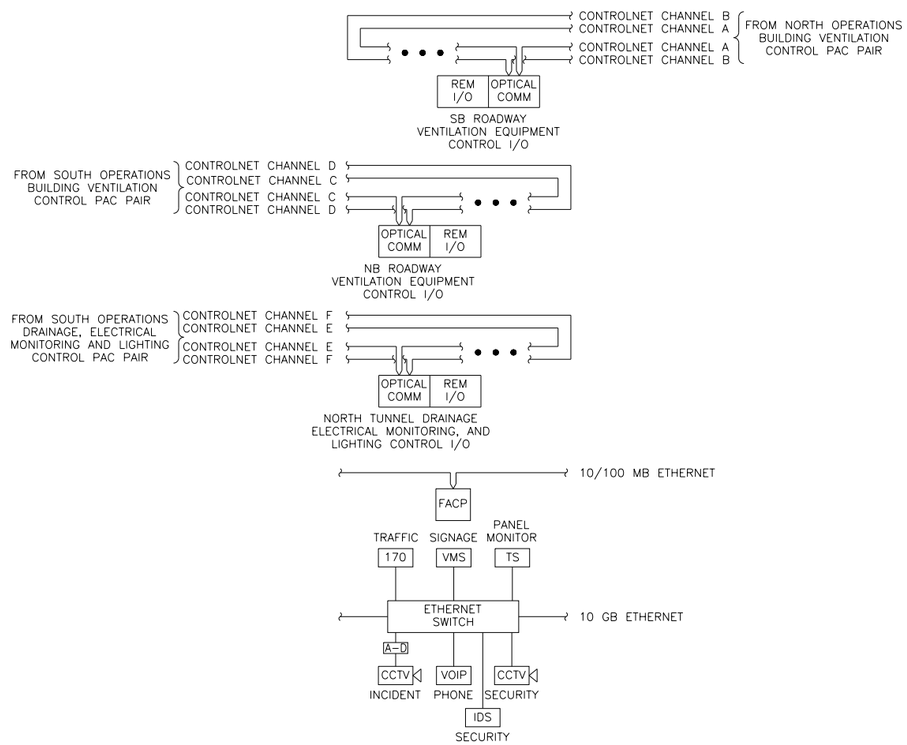

SCADA TYPICAL NODE BLOCK DIAGRAM

(N.T.S.)

1
-

FILE NAME	IP_PWP:dms69911\46055-Txx-14EL002.DLV						
TIME	20-OCT-2010 06:48				REGION NO.	STATE	FED.AID PROJ.NO.
DATE	20-OCT-2010				10	WASH	
PLOTTED BY	groe				JOB NUMBER		
DESIGNED BY	T. KINLEY						
ENTERED BY	D. BECKER						
CHECKED BY	P. FORDYCE				CONTRACT NO.		LOCATION NO.
PROJ. ENGR.	S. EVERETT						
REGIONAL ADM.	R. PAANANEN	REVISION	DATE	BY			

RFP DESIGN

SUBMITTED BY
SEATTLE TUNNEL PARTNERS

NOT FOR CONSTRUCTION

Washington State Department of Transportation

U.S. Department of Transportation
Federal Highway Administration

City of Seattle

ALASKAN WAY VIADUCT
REPLACEMENT PROJECT
SR 99 BORED TUNNEL
CONTRACT PACKAGE 14

SCADA TYPICAL NODE
BLOCK DIAGRAM

EL002

SHEET 200 OF 208 SHEETS

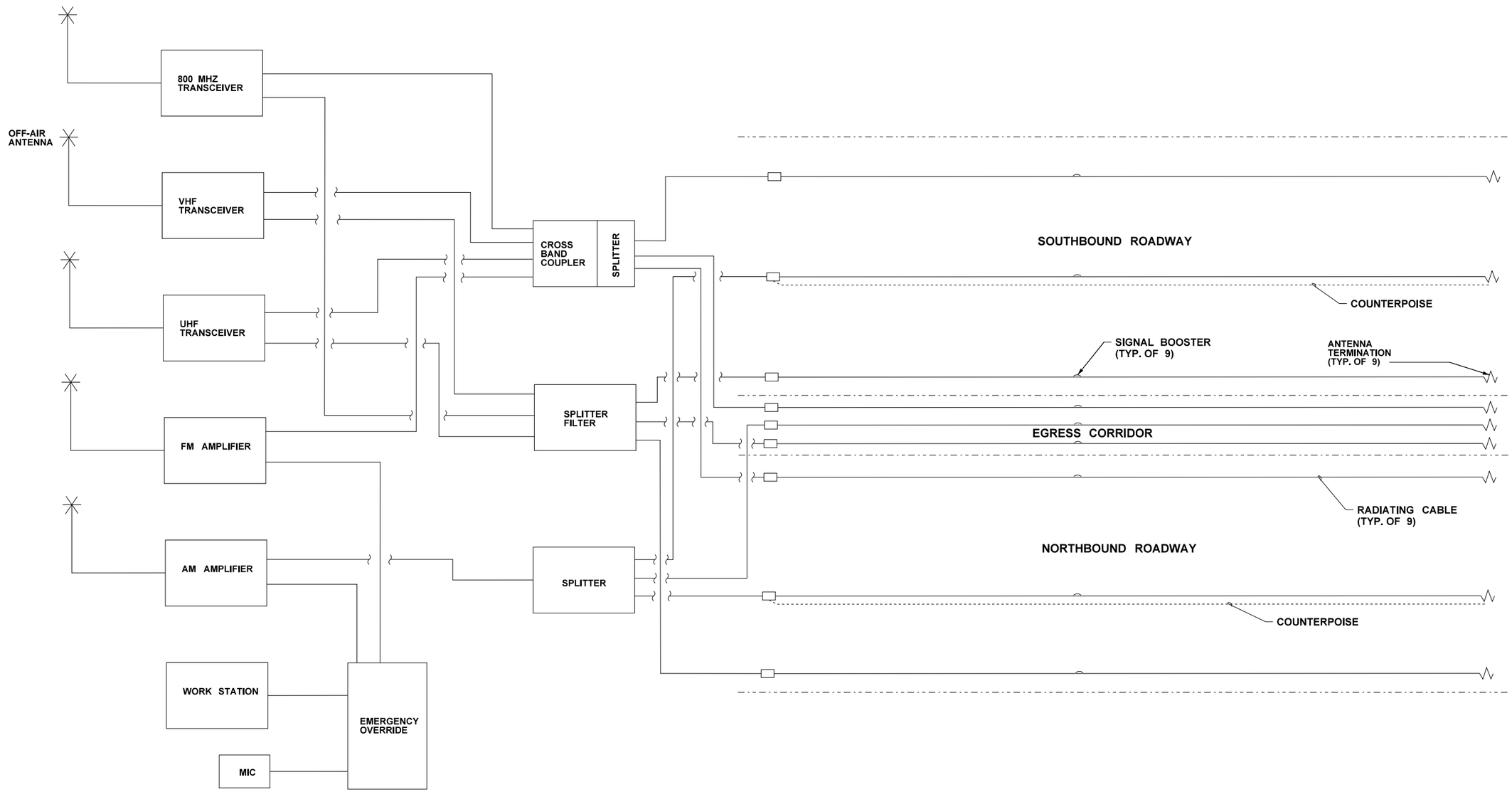

NOTES:

1. 2-WAY RADIO COVERAGE TO BE PROVIDED IN TUNNEL, EGRESS CORRIDOR AND VENT BUILDINGS.

RADIO SYSTEM ONE-LINE

(N.T.S.)

1 / -

FILE NAME	IP_PWP:dms69911\46055-Txx-14EL003.DLV				REGION NO. 10	STATE WASH	FED.AID PROJ.NO.
TIME	20-OCT-2010 06:49				JOB NUMBER		
DATE	20-OCT-2010						
PLOTTED BY	groe				CONTRACT NO.		LOCATION NO.
DESIGNED BY	P. FORDYCE						
ENTERED BY	D. BECKER						
CHECKED BY	L. SAFFELL						
PROJ. ENGR.	S. EVERETT						
REGIONAL ADM.	R. PAANANEN	REVISION	DATE	BY			

PATRICIA L. FORDYCE — STATE OF WASHINGTON — 26932 — REGISTERED PROFESSIONAL ENGINEER

RFP DESIGN
SUBMITTED BY
SEATTLE TUNNEL PARTNERS

NOT FOR CONSTRUCTION

Washington State Department of Transportation
U.S. Department of Transportation Federal Highway Administration
City of Seattle

ALASKAN WAY VIADUCT REPLACEMENT PROJECT
SR 99 BORED TUNNEL
CONTRACT PACKAGE 14

RADIO SYSTEM ONE–LINE

EL003

SHEET 201 OF 208 SHEETS

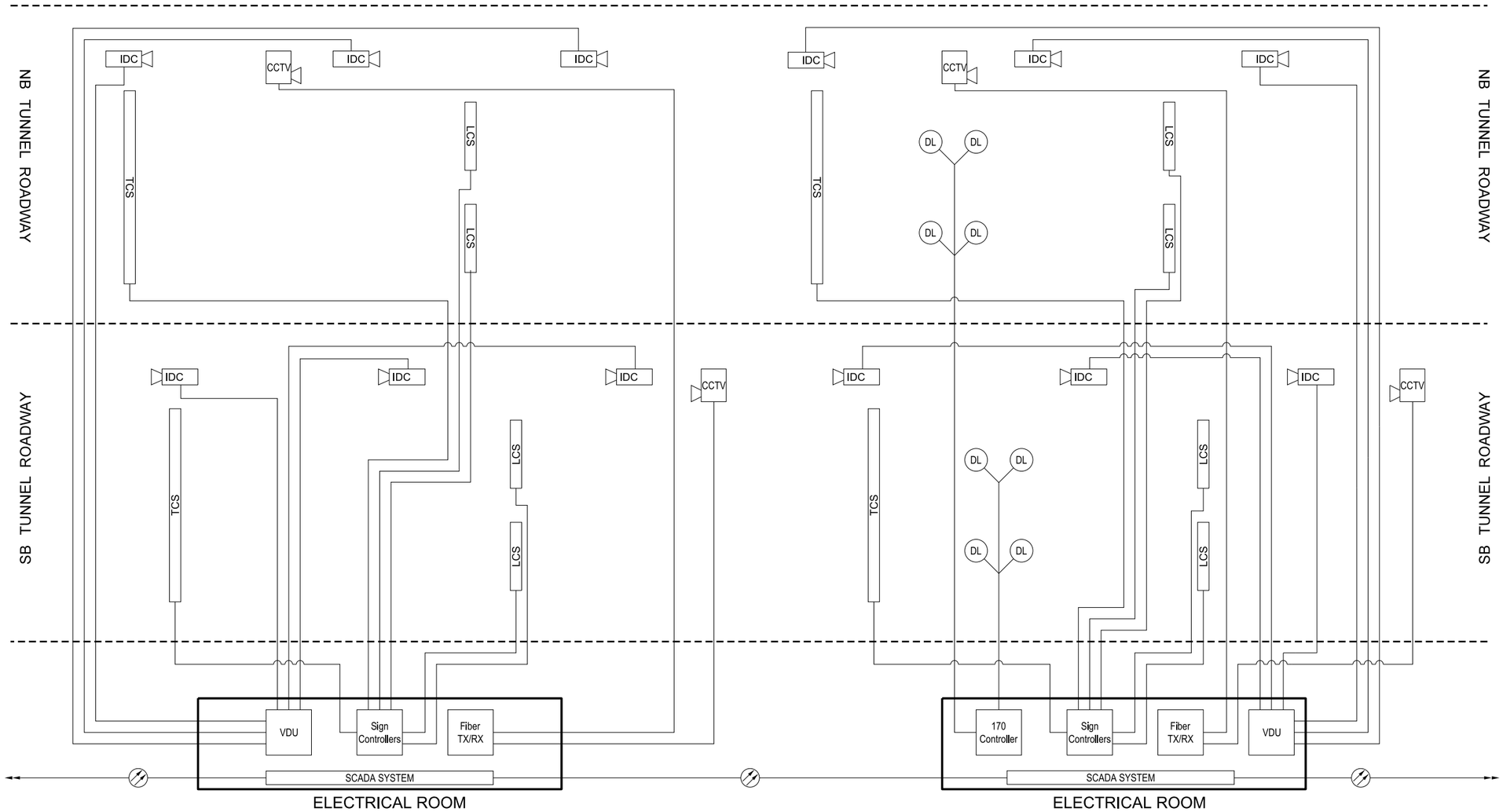

LEGEND

- IDC — INCIDENT DETECTION CAMERA
- CCTV — CCTV CAMERA (PTZ)
- LCS — LANE CONTROL SIGNS
- TCS — TUNNEL CONTROL SIGN
- DL — LOOP DETECTOR
- FIBER OPTIC COMMUNICATION NETWORK
- EQUIPMENT RACK

ITS SCHEMATIC TYPICAL

(N.T.S.)

1 / -

FILE NAME	IP_PWP:dms69911\46055-Txx-14EL004.DLV
TIME	20-OCT-2010 06:49
DATE	20-OCT-2010
PLOTTED BY	groe
DESIGNED BY	K. HOUGH
ENTERED BY	D. BECKER
CHECKED BY	P. FORDYCE
PROJ. ENGR.	S. EVERETT
REGIONAL ADM.	R. PAANANEN

REVISION | DATE | BY

REGION NO. 10 | STATE WASH | FED.AID PROJ.NO.

JOB NUMBER

CONTRACT NO. | LOCATION NO.

PATRICIA L. FORDYCE — STATE OF WASHINGTON — 36982 — REGISTERED PROFESSIONAL ENGINEER

RFP DESIGN

SUBMITTED BY SEATTLE TUNNEL PARTNERS

NOT FOR CONSTRUCTION

Washington State Department of Transportation

U.S. Department of Transportation Federal Highway Administration

City of Seattle

ALASKAN WAY VIADUCT REPLACEMENT PROJECT
SR 99 BORED TUNNEL
CONTRACT PACKAGE 14

ITS SCHEMATIC TYPICAL

EL004

SHEET 202 OF 208 SHEETS

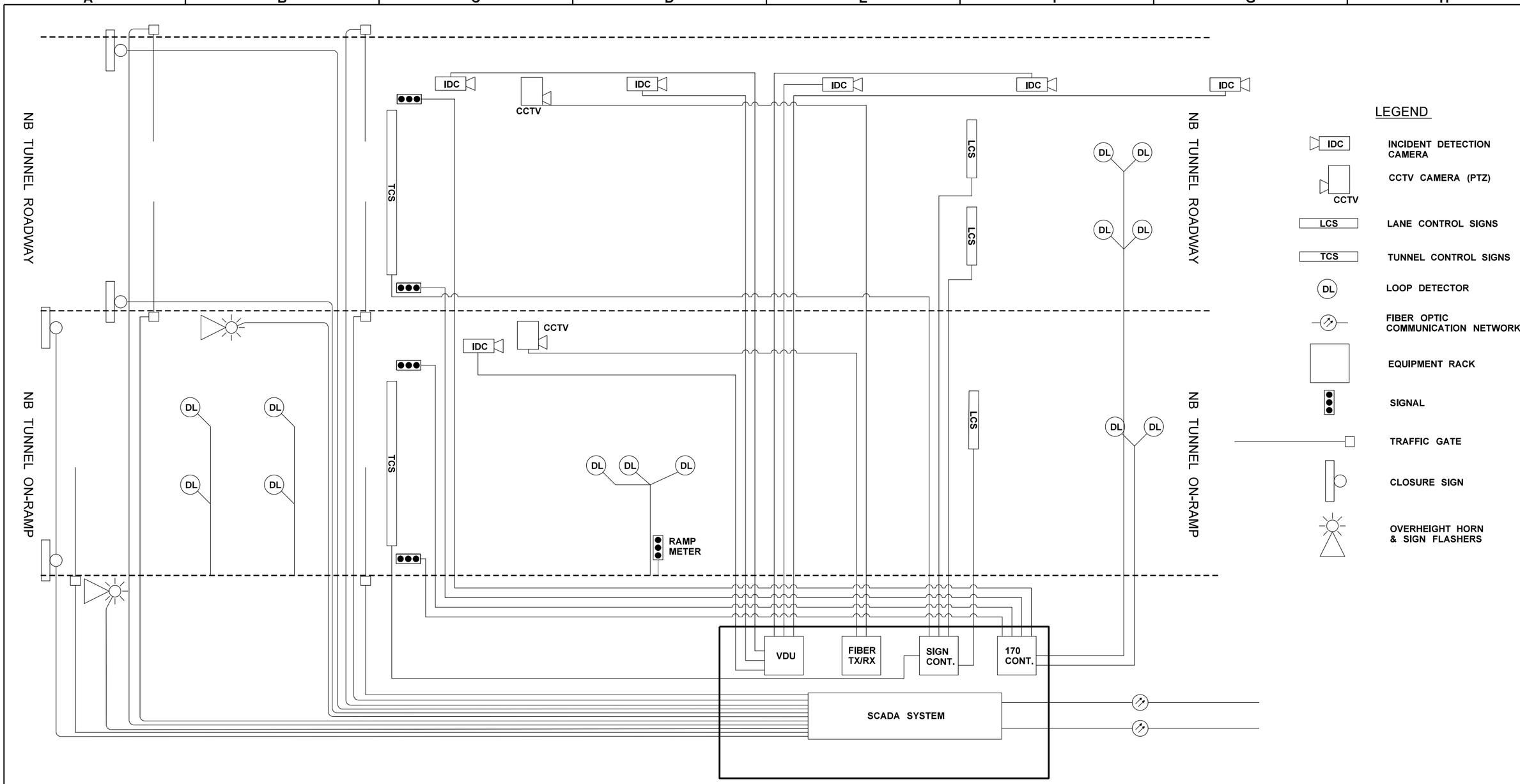

ITS SCHEMATIC SOUTH

(N.T.S.)

1 / -

FILE NAME	IP_PWP:dms69911\46055-Txx-14EL005.DLV						
TIME	20-OCT-2010 06:49				REGION NO. 10	STATE WASH	FED.AID PROJ.NO.
DATE	20-OCT-2010						
PLOTTED BY	groe				JOB NUMBER		
DESIGNED BY	K. HOUGH						
ENTERED BY	D. BECKER						
CHECKED BY	P. FORDYCE				CONTRACT NO.		LOCATION NO.
PROJ. ENGR.	S. EVERETT						
REGIONAL ADM.	R. PAANANEN	REVISION	DATE	BY			

PATRICIA L. FORDYCE — STATE OF WASHINGTON — 30958 — REGISTERED PROFESSIONAL ENGINEER

RFP DESIGN
SUBMITTED BY
SEATTLE TUNNEL PARTNERS

NOT FOR CONSTRUCTION

Washington State Department of Transportation
U.S. Department of Transportation Federal Highway Administration
City of Seattle

ALASKAN WAY VIADUCT REPLACEMENT PROJECT
SR 99 BORED TUNNEL
CONTRACT PACKAGE 14

ITS SCHEMATIC SOUTH

EL005

SHEET 203 OF 208 SHEETS

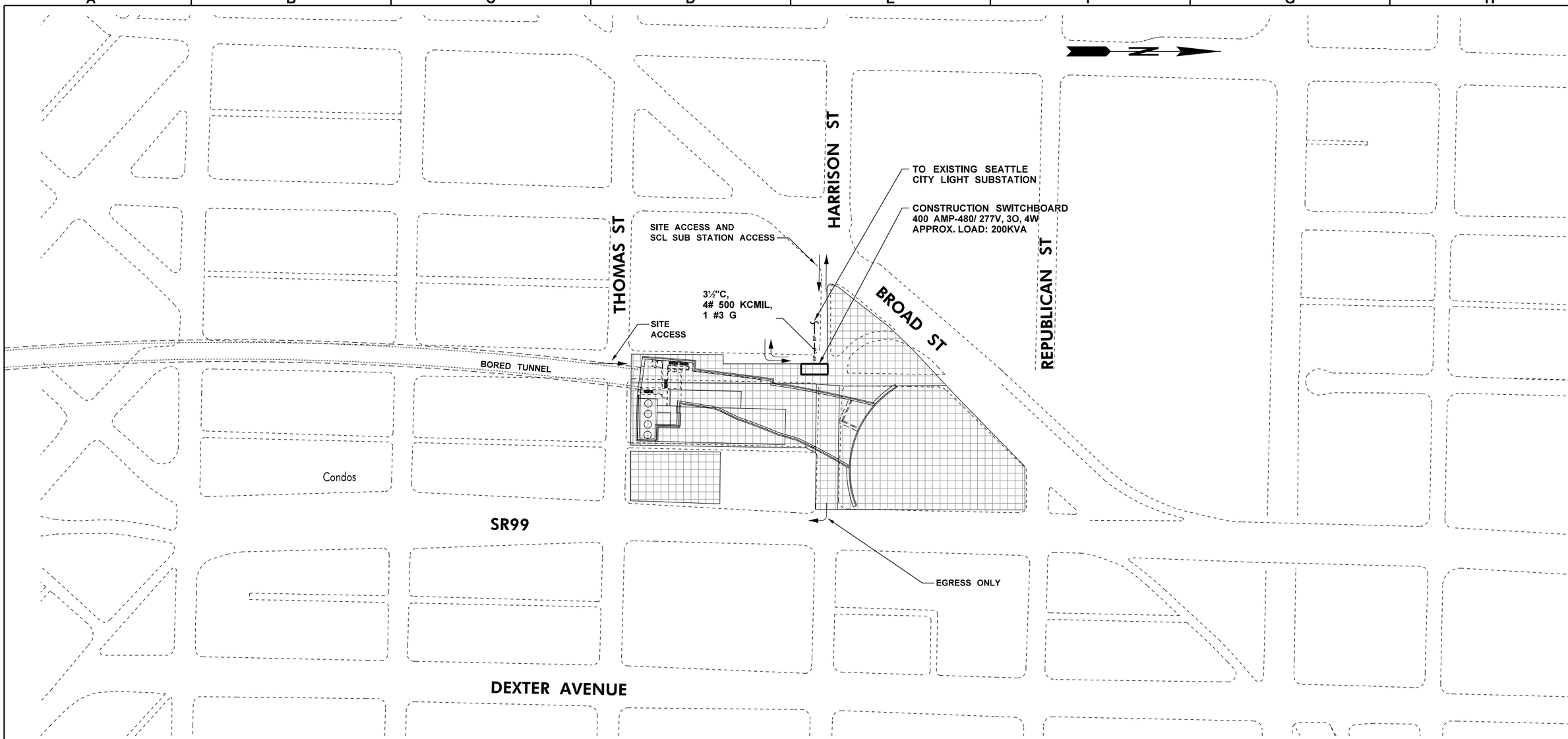

LEGEND

TU: DESIGN/BUILD TUNNEL CONTRACTOR

FILE NAME	IP_PWP:dms69911\46055-Txx-14EL009.DLV				REGION NO.	STATE	FED.AID PROJ.NO.
TIME	21-OCT-2010 08:19				10	WASH	
DATE	21-OCT-2010				JOB NUMBER		
PLOTTED BY	groe						
DESIGNED BY	P. FORDYCE						
ENTERED BY	D. BECKER				CONTRACT NO.		LOCATION NO.
CHECKED BY	P. FORDYCE						
PROJ. ENGR.	S. EVERETT						
REGIONAL ADM.	R. PAANANEN	REVISION	DATE	BY			

PATRICIA L. FORDYCE — STATE OF WASHINGTON — 36932 — REGISTERED PROFESSIONAL ENGINEER

RFP DESIGN

SUBMITTED BY
SEATTLE TUNNEL PARTNERS

NOT FOR CONSTRUCTION

Washington State Department of Transportation

U.S. Department of Transportation
Federal Highway Administration

City of Seattle

ALASKAN WAY VIADUCT
REPLACEMENT PROJECT
SR 99 BORED TUNNEL
CONTRACT PACKAGE 14

TEMPORARY POWER
SITE PLAN NORTH

EL009

SHEET 204 OF 208 SHEETS

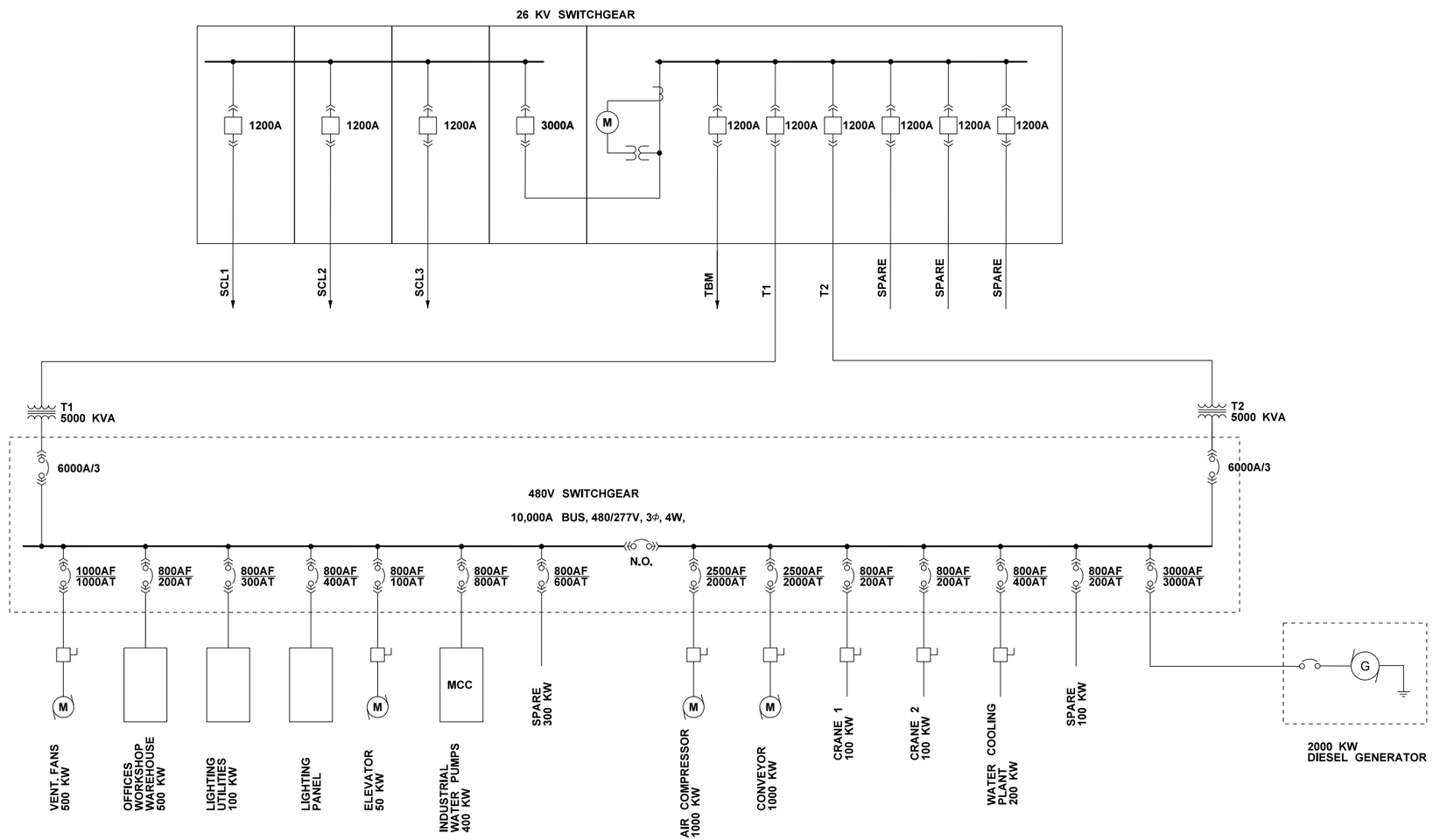

LEGEND

- M — MOTOR
- DISCONNECT SWITCH
- CIRCUIT BREAKER
- G — GENERATOR
- M — METER
- TRANSFORMER
- GROUND ROD

TEMPORARY POWER ONE-LINE DIAGRAM (1 / -)

(N.T.S.)

FILE NAME	IP_PWP:dms69911\46055-Txx-14EL010.DLV				REGION NO.	STATE	FED.AID PROJ.NO.
TIME	20-OCT-2010 06:50				10	WASH	
DATE	20-OCT-2010				JOB NUMBER		
PLOTTED BY	groe						
DESIGNED BY	M. MAUNG						
ENTERED BY	D. BECKER						
CHECKED BY	P. FORDYCE				CONTRACT NO.		LOCATION NO.
PROJ. ENGR.	S. EVERETT						
REGIONAL ADM.	R. PAANANEN	REVISION	DATE	BY			

PATRICIA L. FORDYCE — STATE OF WASHINGTON — 26933 — REGISTERED PROFESSIONAL ENGINEER

RFP DESIGN
SUBMITTED BY
SEATTLE TUNNEL PARTNERS

NOT FOR CONSTRUCTION

Washington State Department of Transportation
U.S. Department of Transportation Federal Highway Administration
City of Seattle

ALASKAN WAY VIADUCT
REPLACEMENT PROJECT
SR 99 BORED TUNNEL
CONTRACT PACKAGE 14

TEMPORARY POWER
ONE-LINE DIAGRAM

EL010

SHEET 205 OF 208 SHEETS

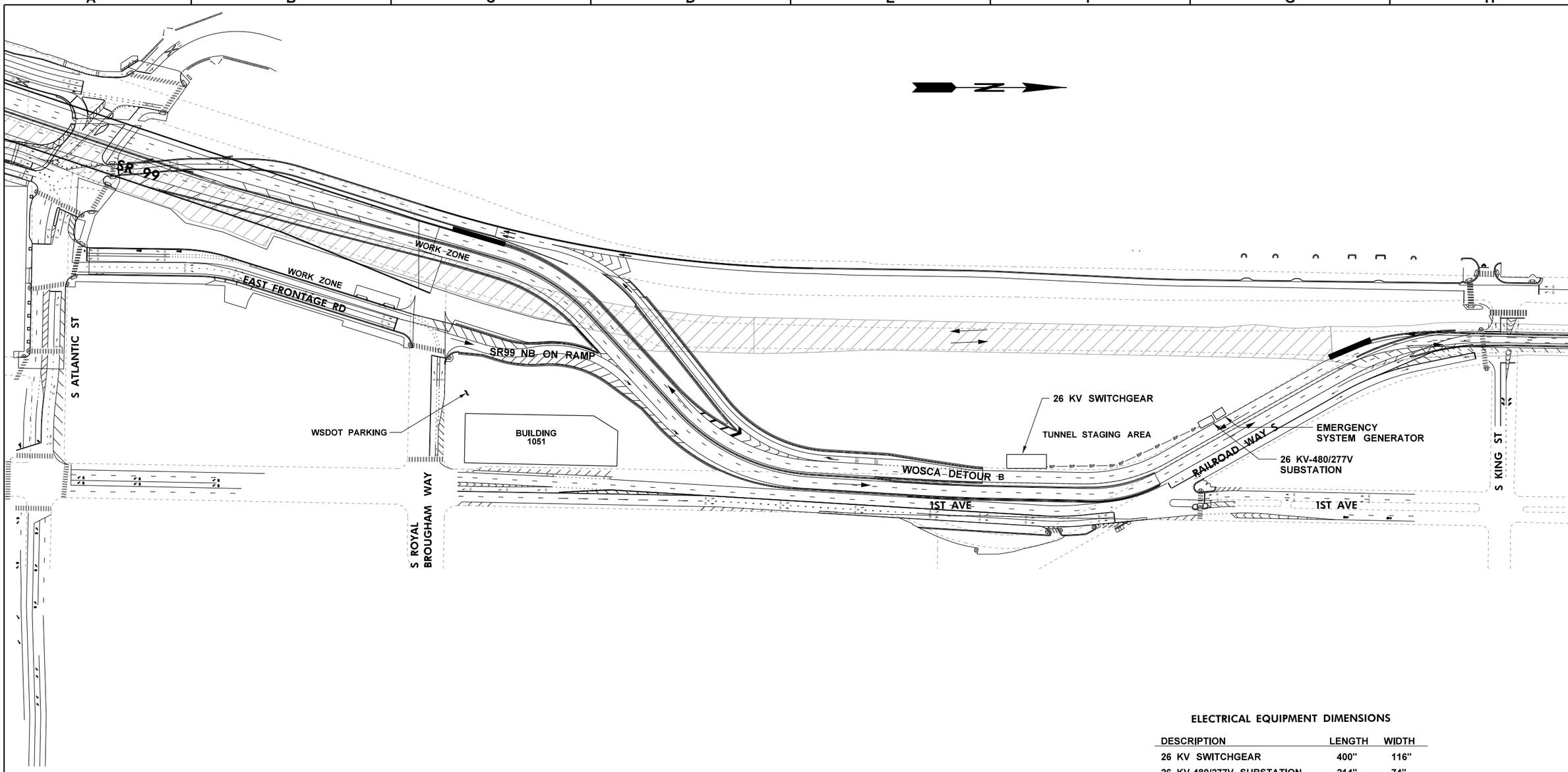

ELECTRICAL EQUIPMENT DIMENSIONS

DESCRIPTION	LENGTH	WIDTH
26 KV SWITCHGEAR	400"	116"
26 KV-480/277V SUBSTATION	214"	74"
GEN SET	247"	102"

FILE NAME	IP_PWP:dms69911\46055-Txx-14EL011.DLV					
TIME	20-OCT-2010 06:50					
DATE	20-OCT-2010					
PLOTTED BY	groe					
DESIGNED BY	P. FORDYCE					
ENTERED BY	D. BECKER					
CHECKED BY	P. FORDYCE					
PROJ. ENGR.	S. EVERETT					
REGIONAL ADM.	R. PAANANEN	REVISION	DATE	BY		

REGION NO.	STATE	FED.AID PROJ.NO.
10	WASH	
JOB NUMBER		
CONTRACT NO.		LOCATION NO.

PATRICIA L. FORDYCE — STATE OF WASHINGTON — 26953 — REGISTERED PROFESSIONAL ENGINEER

RFP DESIGN
SUBMITTED BY
SEATTLE TUNNEL PARTNERS

NOT FOR CONSTRUCTION

Washington State Department of Transportation
U.S. Department of Transportation Federal Highway Administration
City of Seattle

ALASKAN WAY VIADUCT
REPLACEMENT PROJECT
SR 99 BORED TUNNEL
CONTRACT PACKAGE 14

TEMPORARY POWER
SITE PLAN SOUTH

EL011

SHEET 206 OF 208 SHEETS

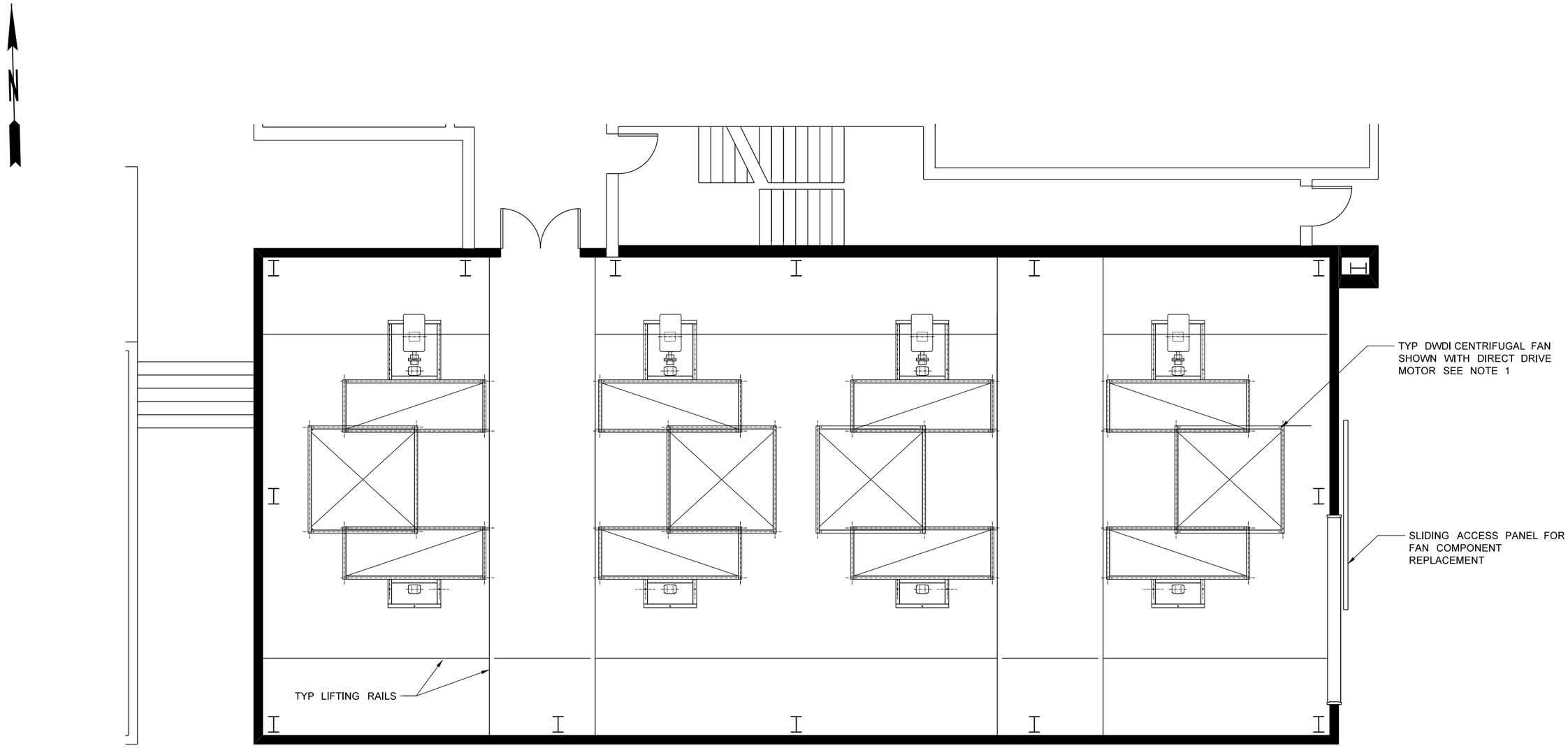

ENLARGED PLAN: FAN ROOM (1)

0 4 8
SCALE IN FEET

NOTES:
1. 76" NOM WHEEL DIA FAN SHOWN REQUIRES 900 RPM MOTOR. 84" NOM WHEEL DIA FAN WILL ALSO FIT IN AVAILABLE SPACE AND REQUIRES 720 RPM MOTOR. BELT DRIVEN FANS ARE A VIABLE OPTION.

FILE NAME	IP_PWP:dms69911\46055-Nxx-14MP001.DLV					
TIME	22-OCT-2010 09:22				REGION NO. / STATE	FED.AID PROJ.NO.
DATE	22-OCT-2010				10 / WASH	
PLOTTED BY	groe				JOB NUMBER	
DESIGNED BY	C. MACEDO					
ENTERED BY	D. BECKER					
CHECKED BY	C. MACEDO				CONTRACT NO.	LOCATION NO.
PROJ. ENGR.	S. EVERETT					
REGIONAL ADM.	R. PAANANEN	REVISION	DATE	BY		

JERRY S. CASEY — STATE OF WASHINGTON — 22496 — REGISTERED PROFESSIONAL ENGINEER

RFP DESIGN
SUBMITTED BY
SEATTLE TUNNEL PARTNERS

NOT FOR CONSTRUCTION

Washington State Department of Transportation
U.S. Department of Transportation Federal Highway Administration
City of Seattle

ALASKAN WAY VIADUCT
REPLACEMENT PROJECT
SR 99 BORED TUNNEL
CONTRACT PACKAGE 14

NORTH BUILDING FAN ROOM
ENLARGED PLAN

MP001

SHEET 207 OF 208 SHEETS

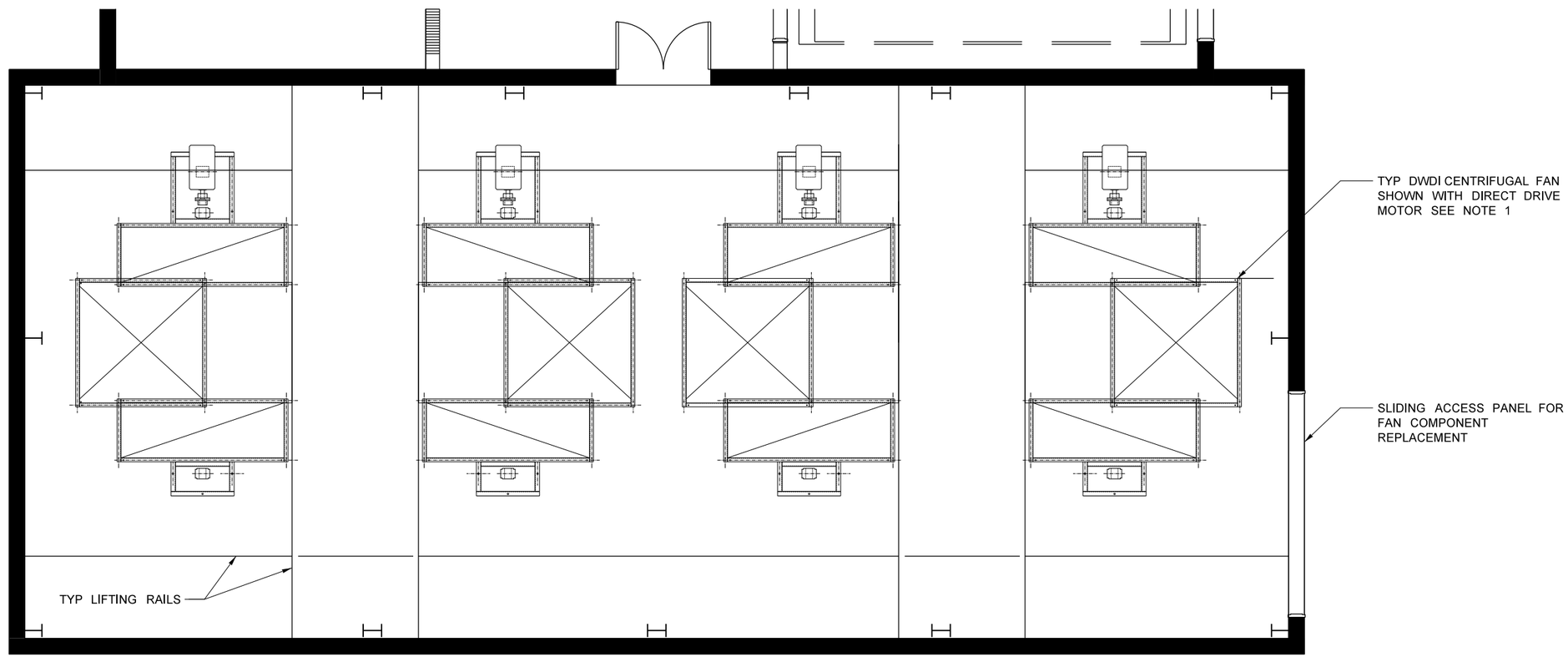

ENLARGED PLAN: FAN ROOM (1)

0 4 8
SCALE IN FEET

NOTES:
1. 76" NOM WHEEL DIA FAN SHOWN REQUIRES 900 RPM MOTOR.
84" NOM WHEEL DIA RPM FAN WILL ALSO FIT IN AVAILABLE SPACE AND REQUIRES 720 RPM MOTOR.
BELT DRIVEN FANS ARE A VIABLE OPTION.

FILE NAME	IP_PWP:dms69911\46055-Sxx-14MP002_OptM.DLV
TIME	21-OCT-2010 11:17
DATE	21-OCT-2010
PLOTTED BY	groe
DESIGNED BY	C. MACEDO
ENTERED BY	D. BECKER
CHECKED BY	C. MACEDO
PROJ. ENGR.	S. EVERETT
REGIONAL ADM.	R. PAANANEN

REVISION	DATE	BY

REGION NO.	STATE	FED.AID PROJ.NO.
10	WASH	
JOB NUMBER		
CONTRACT NO.		LOCATION NO.

JERRY S. CASEY — STATE OF WASHINGTON — 22496 — REGISTERED PROFESSIONAL ENGINEER

RFP DESIGN
SUBMITTED BY
SEATTLE TUNNEL PARTNERS

NOT FOR CONSTRUCTION

Washington State Department of Transportation
U.S. Department of Transportation Federal Highway Administration
City of Seattle

ALASKAN WAY VIADUCT REPLACEMENT PROJECT
SR 99 BORED TUNNEL
CONTRACT PACKAGE 14

SOUTH BUILDING FAN ROOM ENLARGED PLAN

MP002

SHEET 208 OF 208 SHEETS

TECHNICAL MEMOS

SR 99 BORED TUNNEL ALTERNATIVE DESIGN-BUILD PROJECT

DRAGADOS USA – TUTOR PERINI – HNTB

Washington State Department of Transportation

SEATTLE TUNNEL PARTNERS

MEMORANDUM

DATE: July 14, 2010

TO: Gerald Dorn PE, HNTB

FROM: Garry Horvitz PE, Matt Veenstra PE, Hart Crowser

RE: **Liquefiable Soil Delineation**
Approach to South Portal Cut and Cover and U-Sections
Alaska Way Tunnel
17638-00

CC: Mike Coward, PE, HNTB; Rich Johnson PE, HNTB; Michael J. Bailey, PE

Dear Mr. Dorn:

This memo presents a summary of the location of soils that will lose strength due to an expected earthquake event.

Figure 2, sheets 1 and 2, attached, indicate in yellow highlighting the general region where proposed structures are underlain by liquefiable soils. Liquefiable soils exist beneath structures from the southern-most end of the portal, about station 184+50, to about station 196+15 (may be variable between stations 196+00 and 196+50). All borings between stations 184+50 and 196+15 encounter soils that will lose strength during a 108-year expected earthquake event (EE event)

Subsequent figures present liquefaction susceptibility curves and representative cross sections illustrating those regions where the factor of safety against liquefaction is less than about 1 during an expected earthquake.

The cross sections show that almost all soils above the glacial deposits (geologic units Qxxx) are either liquefiable (ESU 2, granular – Ha, Hf) or will lose strength (ESU 3, soft silts & clays – He, He-Ha, some Qvrl) during an EE event. Shannon & Wilson report that the He soils will likely lose 20 to 30 percent of their static shear strength under seismic loading, the granular soils (Ha, Hf) will lose nearly all of their static shear strength. While the He soils may not fully liquefy they are typically

1700 Westlake Avenue North, Suite 200
Seattle, Washington 98109-6212
Fax 206.328.5581
Tel 206.324.9530

unsuitable under non-seismic conditions because they are very soft/very loose and have low strength.3

We appreciate the opportunity to provide these recommendations and trust that this memo meets your current needs. Please call if you have any questions.

Sincerely,

HART CROWSER, INC.

GARRY E. HORVITZ, PE
Sr. Principal Geotechnical Engineer

Filename: J:\211\20840-062\21-1-20840-062 Plan Tunnel 100fpi.dwg Layout: Bored Tunnel 1 Date: 06-03-2010 Login: lr

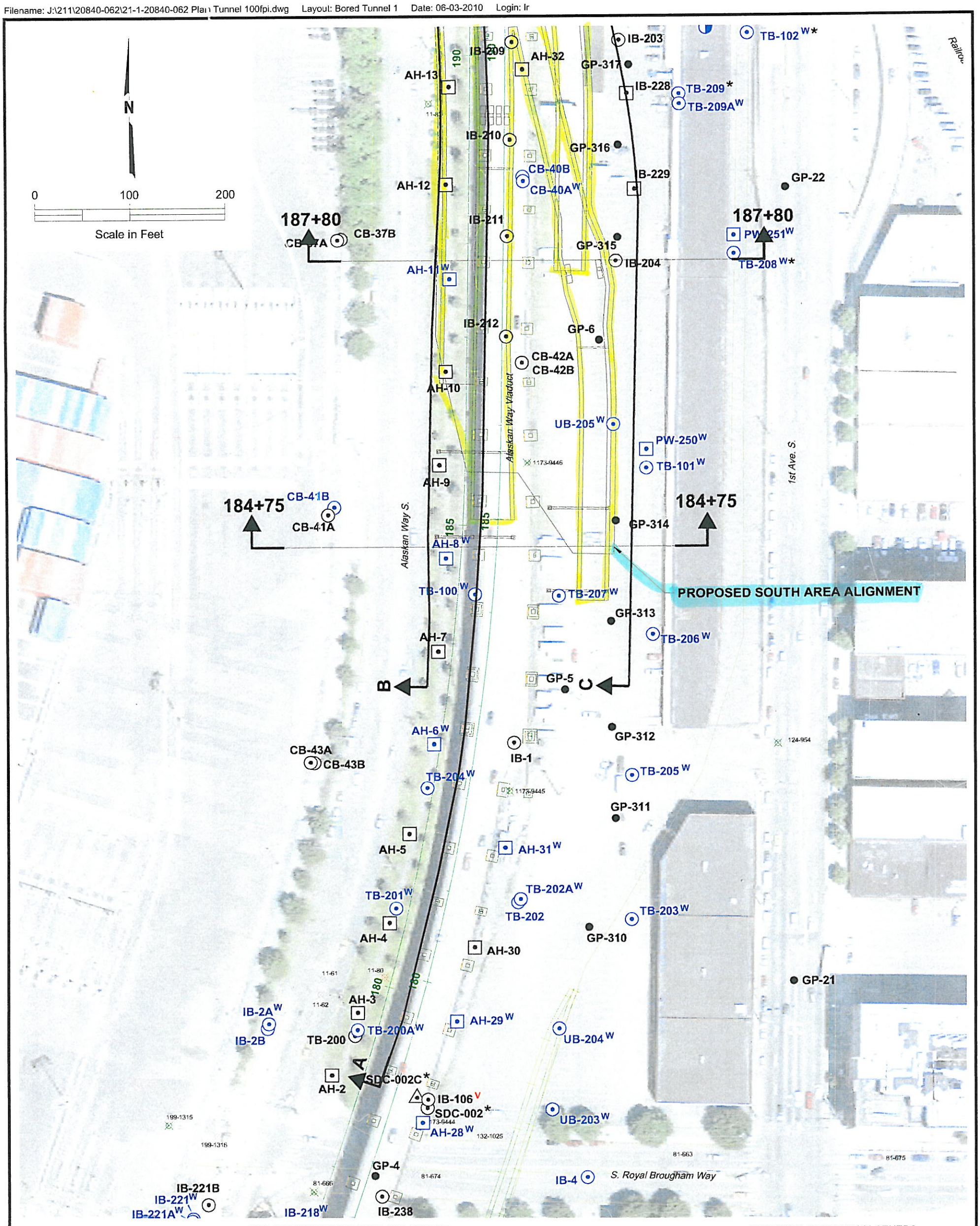

PROJECT EXPLORATIONS AND LEGEND

- Soil Borings (2001 - 2010)
- Sonic Core Borings (2001 - 2010)
- Cone Penetration Test Probes (2001 - 2008)
- Explorations Shown in Blue Have Groundwater Monitoring Devices (Wells Or Vibrating Wire Piezometers)
- Geoprobes Performed (2001 - 2010)
- A — Generalized Subsurface Profile or Cross Section (See Figures 6 through 33 and Exhibit 1)

Superscripts:
- W — Well Installed
- * — Shear Wave Velocity Measurements Obtained
- P — Pressuremeter Tests Performed
- V — Vane Shear Tests Performed

PREVIOUS BORINGS BY OTHERS

- Boring Less than 50' Deep
- Boring Between 50'-100' Deep
- Boring More than 100' Deep

NOTES

1. Base map is adapted from City of Seattle GIS data files *topo_all.dwg*, *st_names.dwg*, and *paveedge.dwg*, received 3-11-02; City of Seattle GIS data file *buildings.dwg*, received 3-6-02; and Parsons Brinckerhoff AutoCAD files *BSMP_SO.dwg*, received 11-30-01, and *rail.dwg*, received 5-15-03.
2. Bus tunnel, BNSF tunnel, and EBI are based on file *BT Feb09 Mezher.dgn*, received 2-27-09 from Parsons Brinckerhoff.
4. Bored tunnel is based on *End to End Dec09.DGN*, received 12-23-09; approaches are based on *BT May 10 - To Nykamp 051910.dgn*, received 5-19-10, from Parsons Brinckerhoff. Tunnel alignment shown is for reference only.
5. Existing viaduct footings are based on Parsons Brinckerhoff files *160073U00ALLUEF000.dwg*, received 6-11-07; *GIS_EX_VIADUCT.dgn*, received 4-9-08; and *160073CSBS00SD200.MST*, received 5-27-08.

Alaskan Way Viaduct and Seawall Program
SR 99 Bored Tunnel Alternative
Seattle, Washington

SITE AND EXPLORATION PLAN

June 2010 21-1-20840-062

SHANNON & WILSON, INC.
Geotechnical and Environmental Consultants

FIG. 2
Sheet 1 of 12

FIG. 2
Sheet 1 of 12

Filename: J:\211\20840-062\21-1-20840-062 Plan Tunnel 100fpi.dwg Layout: Bored Tunnel 2 Date: 06-03-2010 Login: lr

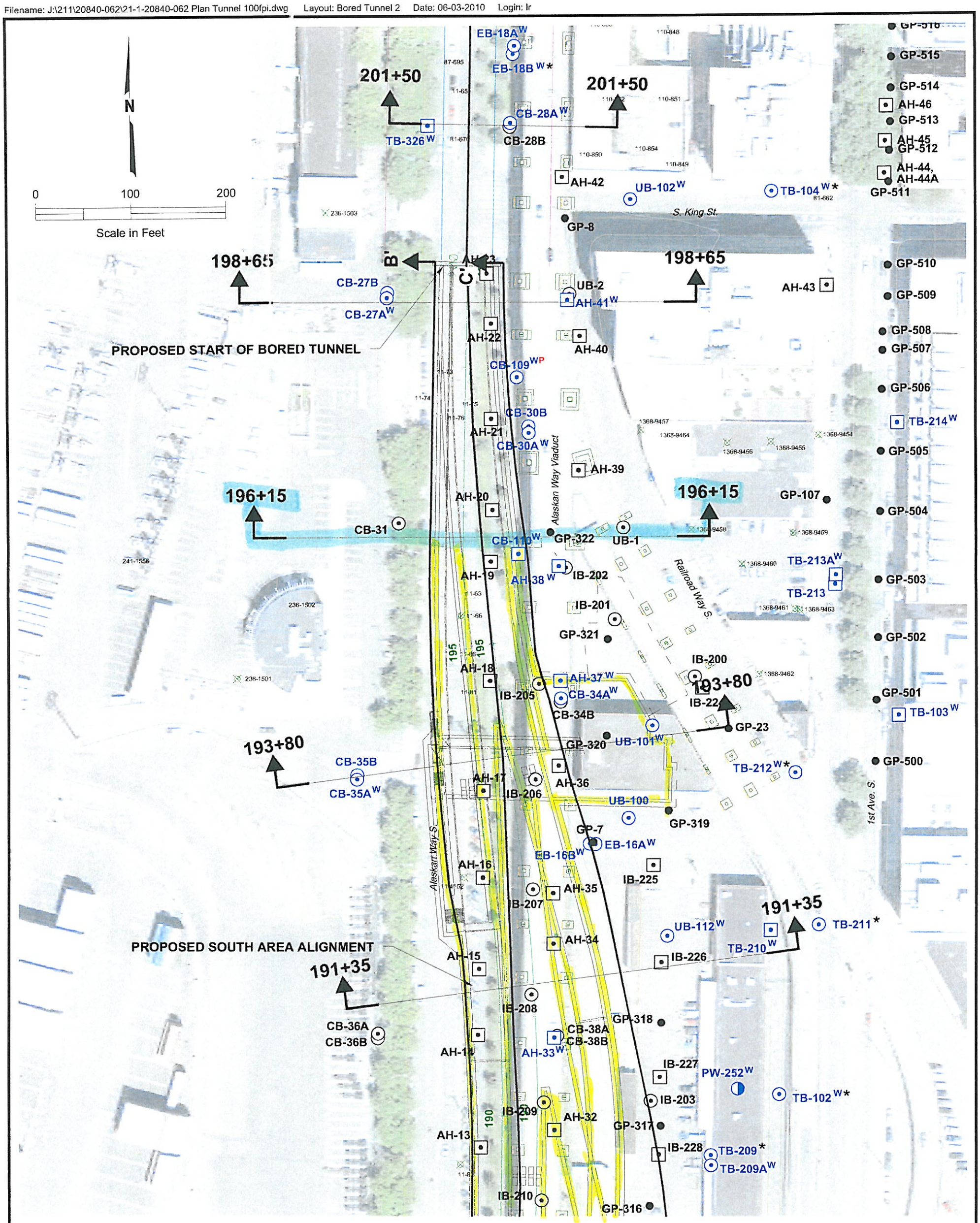

PROJECT EXPLORATIONS AND LEGEND

- Soil Borings (2001 - 2010)
- Sonic Core Borings (2001 - 2010)
- Cone Penetration Test Probes (2001 - 2008)
- Explorations Shown in Blue Have Groundwater Monitoring Devices (Wells Or Vibrating Wire Piezometers)
- Geoprobes Performed (2001 - 2010)
- A — Generalized Subsurface Profile or Cross Section (See Figures 6 through 33 and Exhibit 1)

Superscripts:
- W — Well Installed
- * — Shear Wave Velocity Measurements Obtained
- P — Pressuremeter Tests Performed
- V — Vane Shear Tests Performed

PREVIOUS BORINGS BY OTHERS

- Boring Less than 50' Deep
- Boring Between 50'-100' Deep
- Boring More than 100' Deep

NOTES

1. Base map is adapted from City of Seattle GIS data files *topo_all.dwg*, *st_names.dwg*, and *paveedge.dwg*, received 3-11-02; City of Seattle GIS data file *buildings.dwg*, received 3-6-02; and Parsons Brinckerhoff AutoCAD files *BSMP_SO.dwg*, received 11-30-01, and *rail.dwg*, received 5-15-03.
2. Bus tunnel, BNSF tunnel, and EBI are based on file *BT Feb09 Mezher.dgn*, received 2-27-09 from Parsons Brinckerhoff.
4. Bored tunnel is based on *End to End Dec09.DGN*, received 12-23-09; approaches are based on *BT May 10 - To Nykamp 051910.dgn*, received 5-19-10, from Parsons Brinckerhoff. Tunnel alignment shown is for reference only.
5. Existing viaduct footings are based on Parsons Brinckerhoff files *160073U00ALLUEF000.dwg*, received 6-11-07; *GIS_EX_VIADUCT.dgn*, received 4-9-08; and *160073CSBS00SD200.MST*, received 5-27-08.

Alaskan Way Viaduct and Seawall Program
SR 99 Bored Tunnel Alternative
Seattle, Washington

SITE AND EXPLORATION PLAN

June 2010 21-1-20840-062

SHANNON & WILSON, INC.
Geotechnical and Environmental Consultants

FIG. 2
Sheet 2 of 12

FIG. 2
Sheet 2 of 12

Liquefaction Resistance Curves
Seismic Event: 1,000-Year Return Period

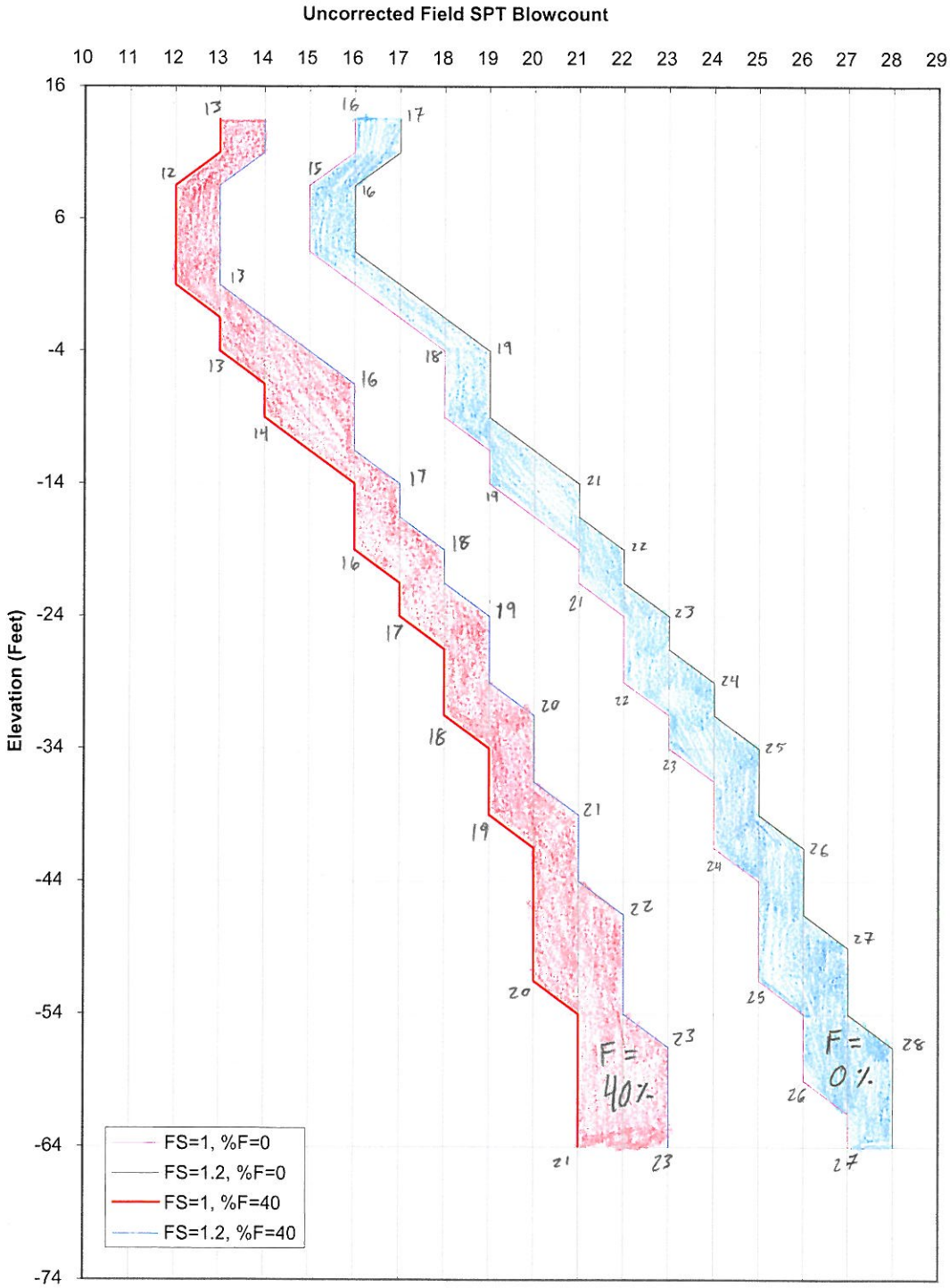

17638-00 AWT by: MWV Date: 06-30-10

Liquefaction Resistance Curves
Seismic Event: 108-Year Return Period

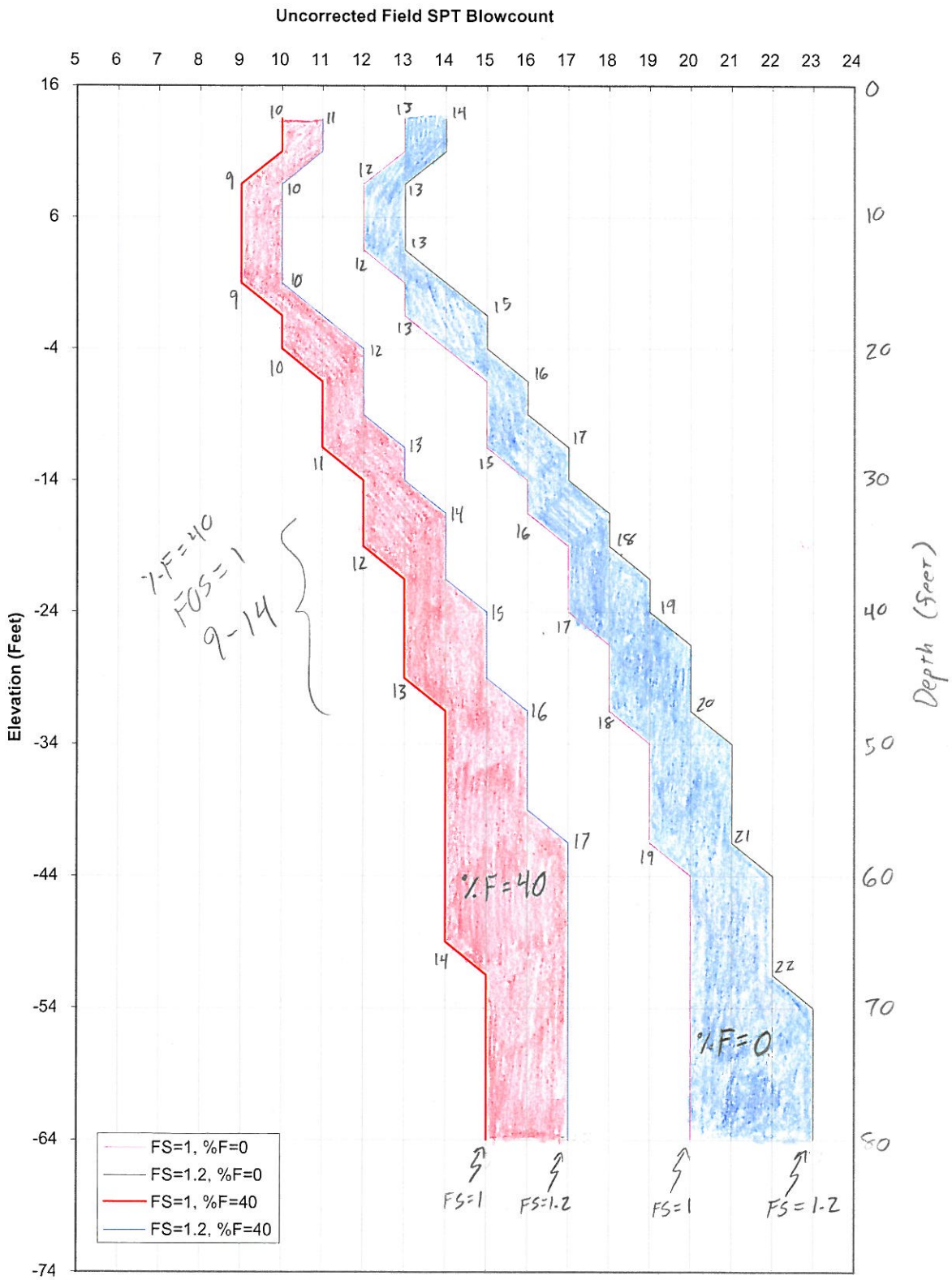

17638-00 AWT by: MWV Date: 06-30-10

*Does not distinguish from non-liquefiable silt vs. sand.

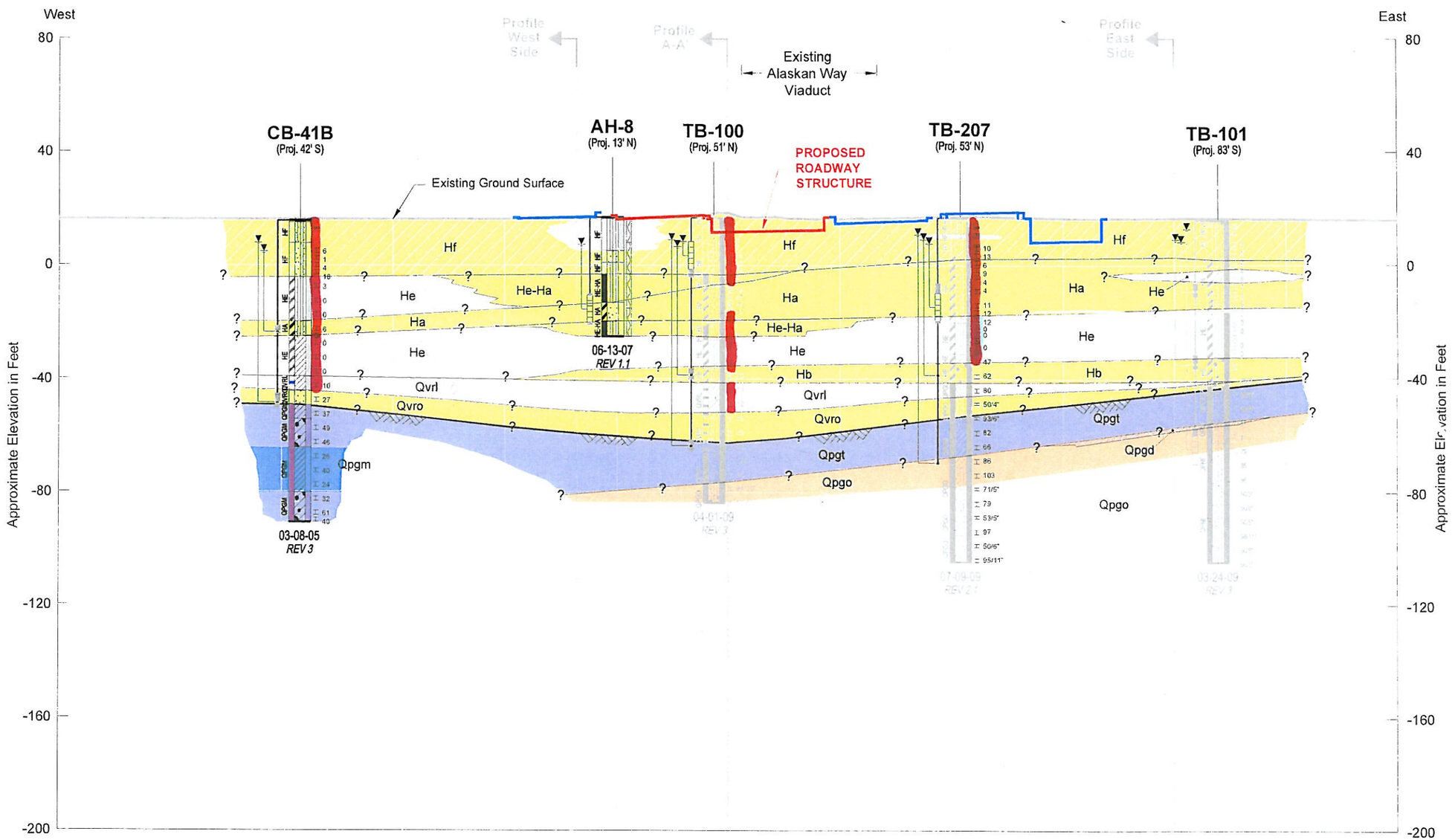

NOTES

1. Existing grade adapted from City of Seattle GIS data files *"topo_all.dwg"* received 3-11-02. Proposed structures and associated existing grade based on *"S-End_Composite_XSections.dgn"*, provided by Parsons Brinckerhoff 5-19-10.
2. This cross section is based on subsurface explorations performed through March 2010. Variations may exist between this profile and actual conditions.
3. See Figure 5 for legend and geologic unit explanation, listing of source files, and other general notes.
4. Proposed roadway structures shown are approximate.
5. Vertical Datum: NAVD88.

0 40 80

Scale in Feet

Vertical = Horizontal

= FOS against Liquefaction ≈ 1 or less. (108-year event.).

Alaskan Way Viaduct and Seawall Program
SR 99 Bored Tunnel Alternative
Seattle, Washington

GENERALIZED SUBSURFACE CROSS SECTION AT STATION NB 184+75

June 2010 | 21-1-20840-062

SHANNON & WILSON, INC.
Geotechnical and Environmental Consultants

FIG. 10

Filename: J:\21\20840-073\21-1-20840-073 Profiles and Sections (CL_PROF_TUNNEL).dwg Layout: 184+75 Date: 06-03-2010 Login: sac

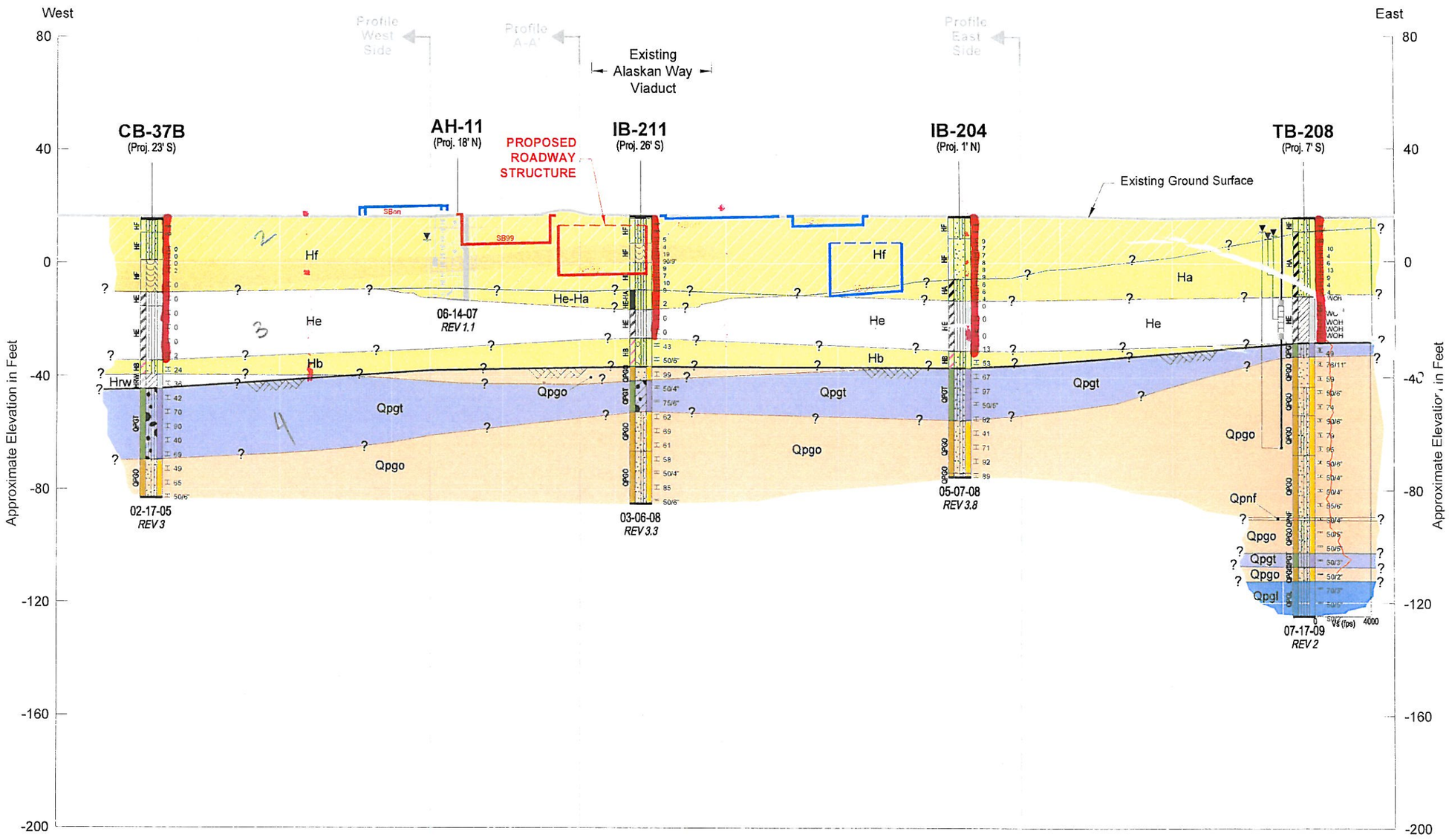

NOTES

1. Existing grade adapted from City of Seattle GIS data files *"topo_all.dwg"* received 3-11-02. Proposed structures and associated existing grade based on *"S-End_Composite_XSections.dgn"*, provided by Parsons Brinckerhoff 5-19-10.
2. This cross section is based on subsurface explorations performed through March 2010. Variations may exist between this profile and actual conditions.
3. See Figure 5 for legend and geologic unit explanation, listing of source files, and other general notes.
4. Proposed roadway structures shown are approximate.
5. Vertical Datum: NAVD88.

0 40 80

Scale in Feet

Vertical = Horizontal

Alaskan Way Viaduct and Seawall Program
SR 99 Bored Tunnel Alternative
Seattle, Washington

GENERALIZED SUBSURFACE CROSS SECTION AT STATION NB 187+80

June 2010 | 21-1-20840-062

SHANNON & WILSON, INC.
Geotechnical and Environmental Consultants

FIG. 11

Filename: J:\211\20840-073\21-1-20840-073 Profiles and Sections (CL_PROF_TUNNEL).dwg Layout: 187+80 Date: 06-03-2010 Login: sac

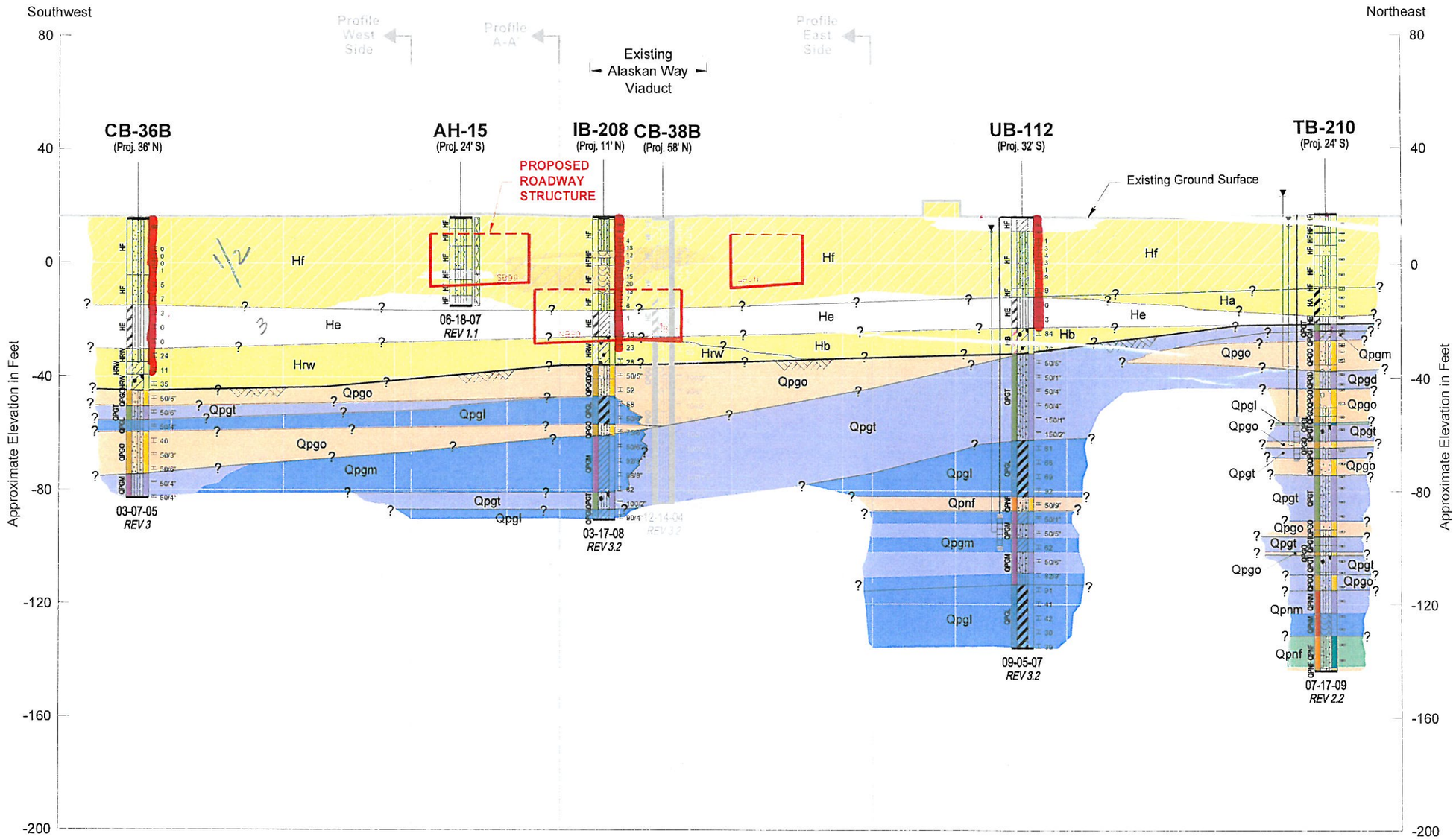

NOTES

1. Existing grade adapted from City of Seattle GIS data files *"topo_all.dwg"* received 3-11-02. Proposed structures and associated existing grade based on *"S-End_Composite_XSections.dgn"*, provided by Parsons Brinckerhoff 5-19-10.
2. This cross section is based on subsurface explorations performed through March 2010. Variations may exist between this profile and actual conditions.
3. See Figure 5 for legend and geologic unit explanation, listing of source files, and other general notes.
4. Proposed roadway structures shown are approximate.
5. Vertical Datum: NAVD88.

0 40 80

Scale in Feet

Vertical = Horizontal

Alaskan Way Viaduct and Seawall Program
SR 99 Bored Tunnel Alternative
Seattle, Washington

GENERALIZED SUBSURFACE CROSS SECTION AT STATION NB 191+35

June 2010 21-1-20840-062

SHANNON & WILSON, INC.
Geotechnical and Environmental Consultants

FIG. 12

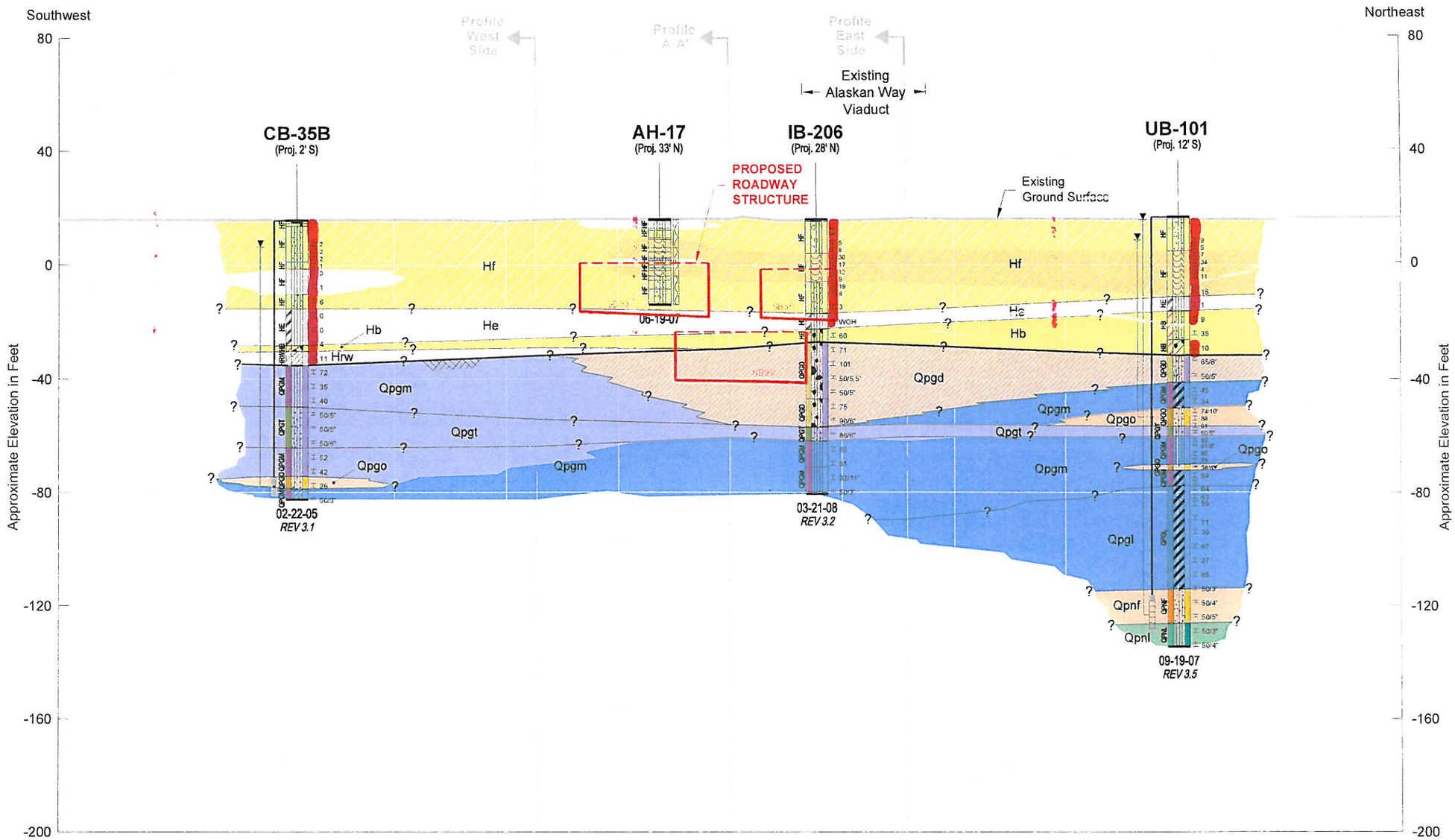

NOTES

1. Existing grade adapted from City of Seattle GIS data files *"topo_all.dwg"* received 3-11-02. Proposed structures and associated existing grade based on *"S-End_Composite_XSections.dgn"*, provided by Parsons Brinckerhoff 5-19-10.
2. This cross section is based on subsurface explorations performed through March 2010. Variations may exist between this profile and actual conditions.
3. See Figure 5 for legend and geologic unit explanation, listing of source files, and other general notes.
4. Proposed roadway structures shown are approximate.
5. Vertical Datum: NAVD88.

0 40 80

Scale in Feet

Vertical = Horizontal

Alaskan Way Viaduct and Seawall Program
SR 99 Bored Tunnel Alternative
Seattle, Washington

GENERALIZED SUBSURFACE CROSS SECTION AT STATION NB 193+80

June 2010 21-1-20840-062

SHANNON & WILSON, INC.
Geotechnical and Environmental Consultants

FIG. 13

Filename: J:\21\20840-073\21-1-20840-073 Profiles and Sections (CL_PROF_TUNNEL).dwg Layout: 193+80 Date: 06-03-2010 Login: sac

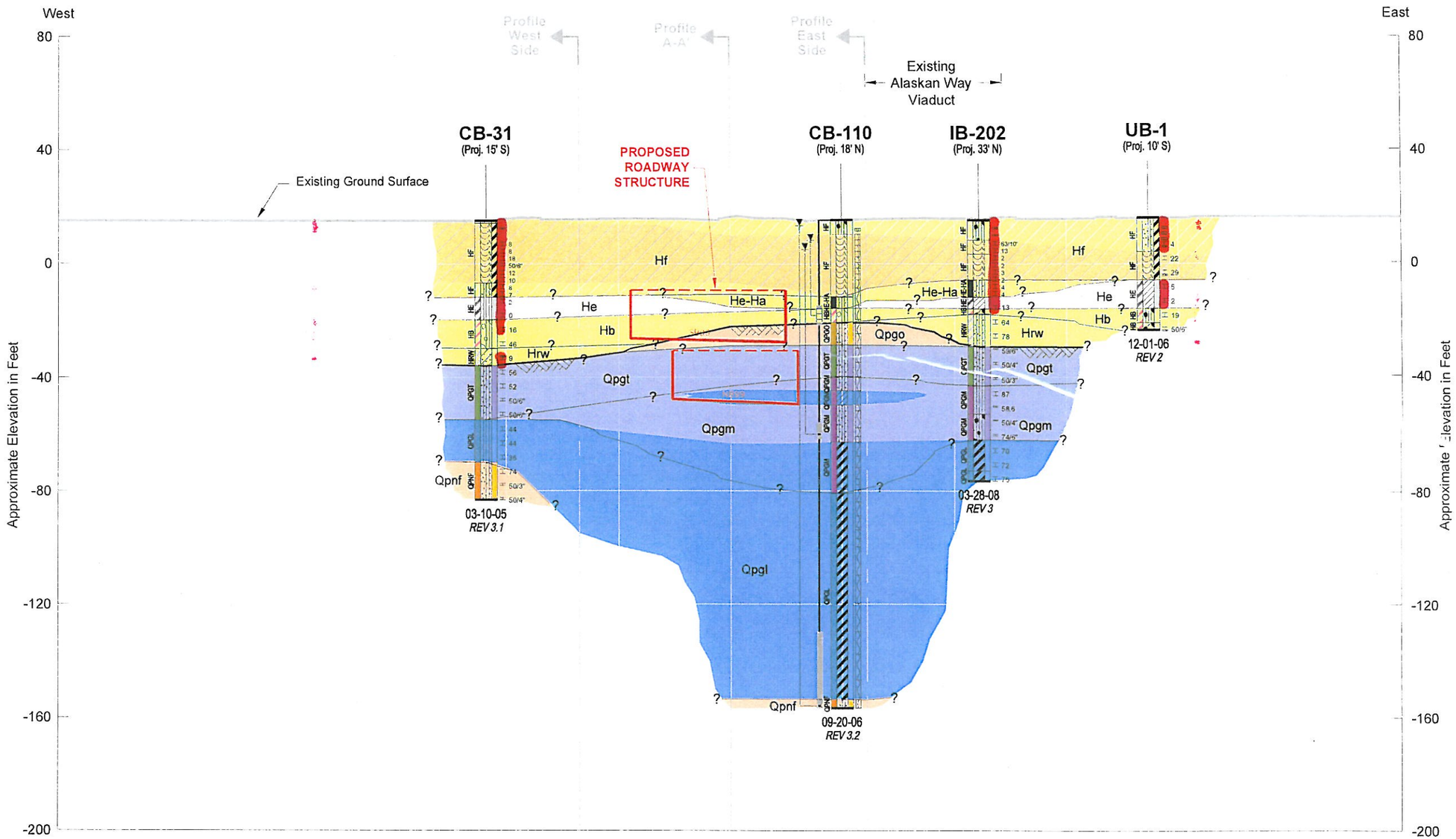

NOTES

1. Existing grade adapted from City of Seattle GIS data files *"topo_all.dwg"* received 3-11-02. Proposed structures and associated existing grade based on *"S-End_Composite_XSections.dgn"*, provided by Parsons Brinckerhoff 5-19-10.
2. This cross section is based on subsurface explorations performed through March 2010. Variations may exist between this profile and actual conditions.
3. See Figure 5 for legend and geologic unit explanation, listing of source files, and other general notes.
4. Proposed roadway structures shown are approximate.
5. Vertical Datum: NAVD88.

0 40 80

Scale in Feet
Vertical = Horizontal

Alaskan Way Viaduct and Seawall Program
SR 99 Bored Tunnel Alternative
Seattle, Washington

GENERALIZED SUBSURFACE CROSS SECTION AT STATION NB 196+15

June 2010 21-1-20840-062

SHANNON & WILSON, INC.
Geotechnical and Environmental Consultants

FIG. 14

Filename: J:\21\20840-073\21-1-20840-073 Profiles and Sections (CL_PROF_TUNNEL).dwg Layout: 196+15 Date: 06-03-2010 Login: sac

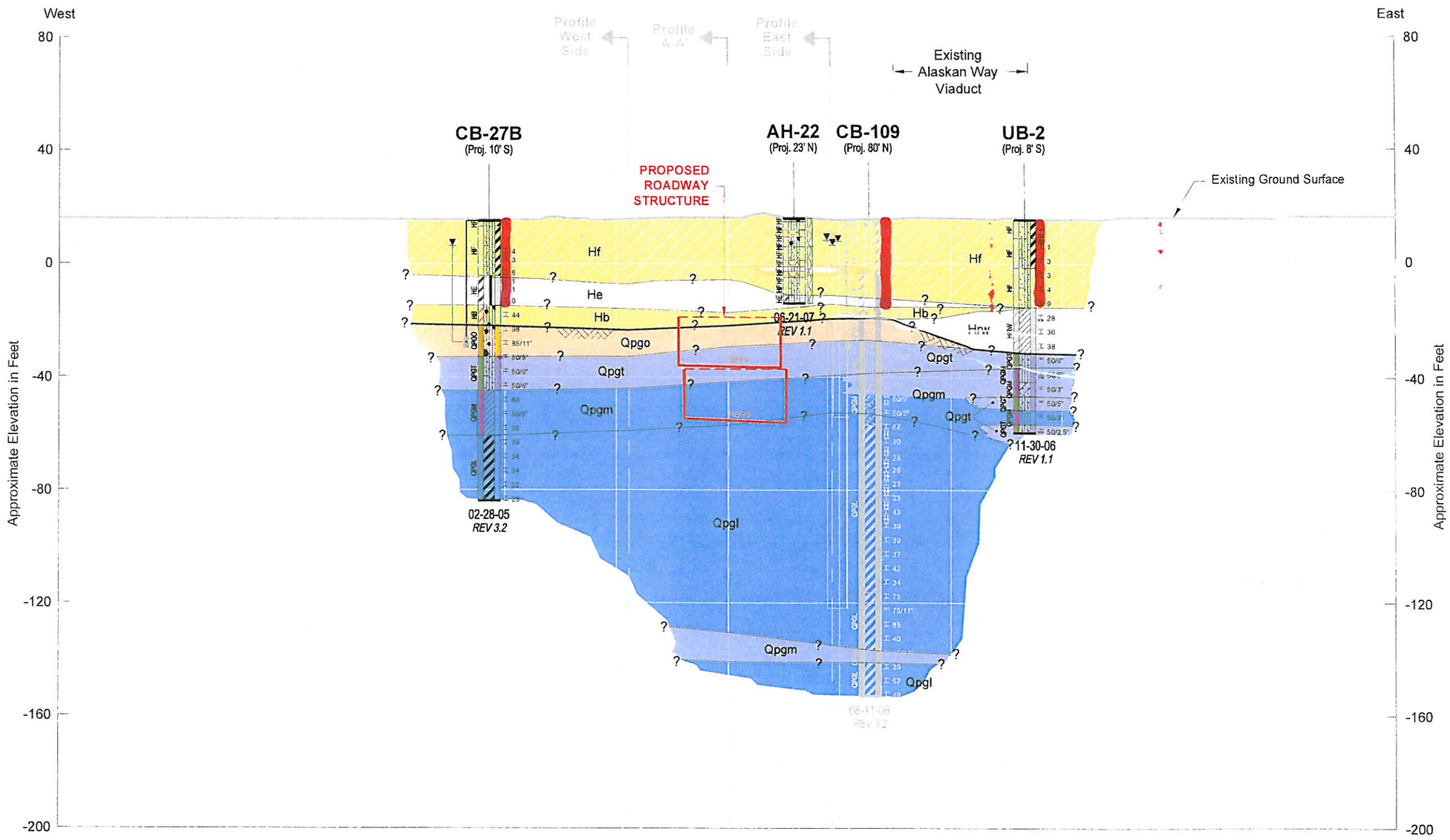

NOTES

1. Existing grade adapted from City of Seattle GIS data files *"topo_all.dwg"* received 3-11-02. Proposed structures and associated existing grade based on *"S-End_Composite_XSections.dgn"*, provided by Parsons Brinckerhoff 5-19-10.
2. This cross section is based on subsurface explorations performed through March 2010. Variations may exist between this profile and actual conditions.
3. See Figure 5 for legend and geologic unit explanation, listing of source files, and other general notes.
4. Proposed roadway structures shown are approximate.
5. Vertical Datum: NAVD88.

0 40 80

Scale in Feet

Vertical = Horizontal

Alaskan Way Viaduct and Seawall Program
SR 99 Bored Tunnel Alternative
Seattle, Washington

GENERALIZED SUBSURFACE CROSS SECTION AT STATION NB 198+65

June 2010 21-1-20840-062

SHANNON & WILSON, INC.
Geotechnical and Environmental Consultants

FIG. 15

Filename: J:\21\20840-073\21-1-20840-073 Profiles and Sections (CL_PROF_TUNNEL).dwg Layout: 198+65 Date: 06-03-2010 Login: sac

MICHAEL J. BAILEY
STATE OF WASHINGTON
22484
REGISTERED
PROFESSIONAL ENGINEER
7.16.10

MEMORANDUM

DATE: **July 16, 2010**

TO: **Gerald Dorn, PE, HNTB**

FROM: Garry Horvitz, PE; Matt Veenstra, PE; Hart Crowser

RE: **Preliminary Geotechnical Design Recommendations**
Approach to South Portal Cut and Cover and U-Sections
Alaska Way Tunnel
17638-00

CC: Michael J. Bailey, PE; Rich Johnson, PE, HNTB

Dear Mr. Dorn:

This memo summarizes geotechnical observations and recommendations to develop concepts for design of excavation shoring systems, dewatering and foundations for structures at the South Portal.

1. PROJECT DESCRIPTION

The South Portal of the SR99 Bored tunnel is located south of King Street at Alaskan Way. The "South Portal" area is comprised of a cut and cover section of the alignment just south of the beginning of the bored section of the tunnel. As the cut and cover section approaches ground surface the north and south bound lanes spread apart and transition into a "U-shaped" segment. The maximum depth of the cut and cover section is about 90 feet at station 200+00 and slopes upward to at-grade roadway sections at the south end of the project (about station 184+75).

In addition to the tunnel alignment, this area will be occupied by the south Ventilation and Operations Building which will extend to a depth of about 70 feet below existing grade just south of King Street and along the east side of the cut and cover alignment.

1700 Westlake Avenue North, Suite 200
Seattle, Washington 98109-6212
Fax 206.328.5581
Tel 206.324.9530

2. SUMMARY OF SUBSURFACE CONDITIONS

The subsurface conditions along this portion of the alignment are substantially different than most of the tunnel alignment and the North Portal Area.

This portion of the alignment is situated over an area of land that was reclaimed at the beginning of the Twentieth Century as part of regrading activities in the upland hills areas of Seattle. The area was part of the originally developed and pioneered areas of Seattle and businesses and roadways were constructed on timber pile decks over what was then Elliott Bay. From historical maps, the pre-filled shoreline is near the location of the beginning of the south end of the bored tunnel portion of the project (South King Street).

Subsurface conditions are discussed in the "Geotechnical Baseline Report" (Appendix G1, May, 2010) Geotechnical and Environmental Data Report (Appendix G2, May, 2010) and other documents including the "Geologic Characterization" (Appendix G4.F, Interim Report CT-6, June, 2010) and "South and North Portal Area Preliminary Retaining Wall Recommendations" (Appendix G4.E, Interim Letter CT-5, June, 2010).

Appendix G4.E by Shannon and Wilson presents the best summary of available geotechnical information for this portion of the project. Figures 4, 5, 6 and 7 are attached to this memo for illustration purposes.

In general, soil conditions consist of unconsolidated fill soils (reclaimed land) over alluvial and marine deposits (Duwamish River tide flats) which consist of loose, fine-grained sands and soft silts and clays. These soils are highly erratic and interlayered and a wide range of grain sizes will be encountered throughout every segment of the excavation for the cut and cover sections and U-sections of the alignment.

Of particular significance in this portion of the alignment is the potential for encountering wood waste materials, wood debris and buried wooden (and other) structures. As indicated above, this area had been developed during the early history of Seattle and was occupied by numerous timber and concrete pile-supported structures. As a result, much of the subsurface contains substantial amounts of wood debris and abandoned structures and piling which can have a profound impact on the constructability of the subsurface portions of the project. A portion of the documentation of historic structures that likely contain buried subsurface elements and debris are shown in Figure 3 from the RFP Appendix G4.F, "Geologic Characterization". The attached subsurface profiles also indicate zones of buried wood debris.

Excavation of the 505 first Avenue Building, located adjacent to, and east of, the South Operations and Ventilation Building, encountered almost 40 feet of soil with wood debris. In some cases the amount of wood debris exceeded 50 percent of the volume of the material. Numerous abandoned timber pilings were encountered and should be expected throughout the alignment of the cut and cover and U-sections. The abandoned timber piles are well-preserved below the water table; therefore, excavation techniques must consider timber pile obstructions.

The soil materials at the south portal have been grouped into Engineering Soil Units (ESU's). The uppermost unit is "Engineered and Non-Engineered Fill" [ESU 1] which consists of a highly heterogeneous mixture of sand, silt and clay. Beneath the fill unit are "Recent Granular Deposits" [ESU 2], consisting of "loose to dense silt and sand with gravel; includes normally consolidated alluvium, beach deposits, reworked glacial deposits, and recessional ice-contact deposits". Interlayered within the Recent Granular Deposits are "Recent Silt and Clay" [ESU 3], which consists of "soft to very stiff clay and silt with fine sand interbeds; includes normally consolidated estuarine deposits and recessional lacustrine deposits". Below the Recent Granular Deposits are glacial deposits which range from glacial till deposits (dense to very dense silty sand and gravel) [ESU 4], "Cohesionless Sand and Gravel" [ESU 5], to "Till-Like Deposits" [ESU 8]. "Cohesionless Silt and Fine Sand" [ESU 6] and "Cohesive silt and clay" [ESU 7], is not expected to significantly occur in the south portal. These underlying layers are glacially consolidated and will provide firm bearing for structural elements unless disturbed by construction.

North of about Stations 196+00 to 196+50 the roadway and building structures are anticipated to be founded on dense glacially overridden soils. South of stations 196+00 to 196+50, the roadway structures would be over recent ESU 2 and ESU 3 soils which will require ground improvement to mitigate potential seismic liquefaction as discussed in section 5.

3. GROUNDWATER

The static groundwater table in this area is very close to the ground surface, typically within four to six feet, and fluctuates a few feet with tide and time of year. According to Table 6 of RFP Appendix G5, the tidal variation in the south portal region has been measured at less than 1 foot. Detailed discussions of the hydrologic regime are contained within the project reference documents.

The presence of continuous static groundwater and pressurized groundwater within portions of the underlying glacial soils will have a significant impact on the constructability aspects of the cut and cover tunnel, U-section, and South Operations and Ventilation Building.

Large volumes of water are confined within coarse grained zones of the glacial soils. The presence of confined water will require de-pressurization of the lower aquifer to help control inflow and reduce potential for loosening the otherwise dense glacial soils. Significant water flow into excavations can occur through drill holes used to install foundation and shoring elements. Earth anchors that encounter a water-bearing zone will require water sealing.

We understand that additional considerations for construction dewatering are presented under separate cover in a memo prepared by Scott Bender.

Foundation measures to resist buoyancy are discussed in section 6, Foundation Considerations.

4. SHORING RECOMMENDATIONS

Shallow groundwater and very loose soil conditions encourage the use of water-tight, monolithic shoring walls. We recommend consideration of both secant piles and slurry walls. Note that construction of the 505 First Avenue building, near the proposed ventilations and operations building, used slurry wall shoring. This slurry wall system consisted of a Cutter Soil Mixing method which may not be readily suitable for the depth of excavation planned for the majority of the South portal cut and cover or U-shaped sections because of the limited depth of this equipment and the presence of woodwaste and other debris.

General Design Parameters.

For conceptual shoring design we recommend using the preliminary earth pressure diagrams presented in RFP Appendix G4.E, Interim Letter CT-5, Figures 21–32, and 51. Preliminary Earth pressure diagrams for the South Ventilation and Operations Building are in Figures 11 to 22 and 39 RFP Appendix G4.L, Interim Letter CT-12. For final design these preliminary values will need to be refined.

No-load zone: The no-load zone for tieback anchors should be offset a distance of H/4 from the back of the wall and angled upwards at 60 degrees from horizontal. H is the height of the wall above the base of the excavation. The bottom of the no-load zone is located at the base of the excavation. See Figure 1, below. The no-load zone should not include any soil within ESU's 1, 2 and 3; all anchors should derive 100 percent of their grout-to-ground capacity from the underlying glacially overconsolidated soils.

Anchor declination: We anticipate typical anchor declinations of about 30 to 40 degrees down from horizontal. Normally, tieback anchors in this area are installed at angles of 20 to 30 degrees.

Steeper angles may be necessary at some locations due to the depth to the glacially consolidated soils that will need to be used for the bond zone.

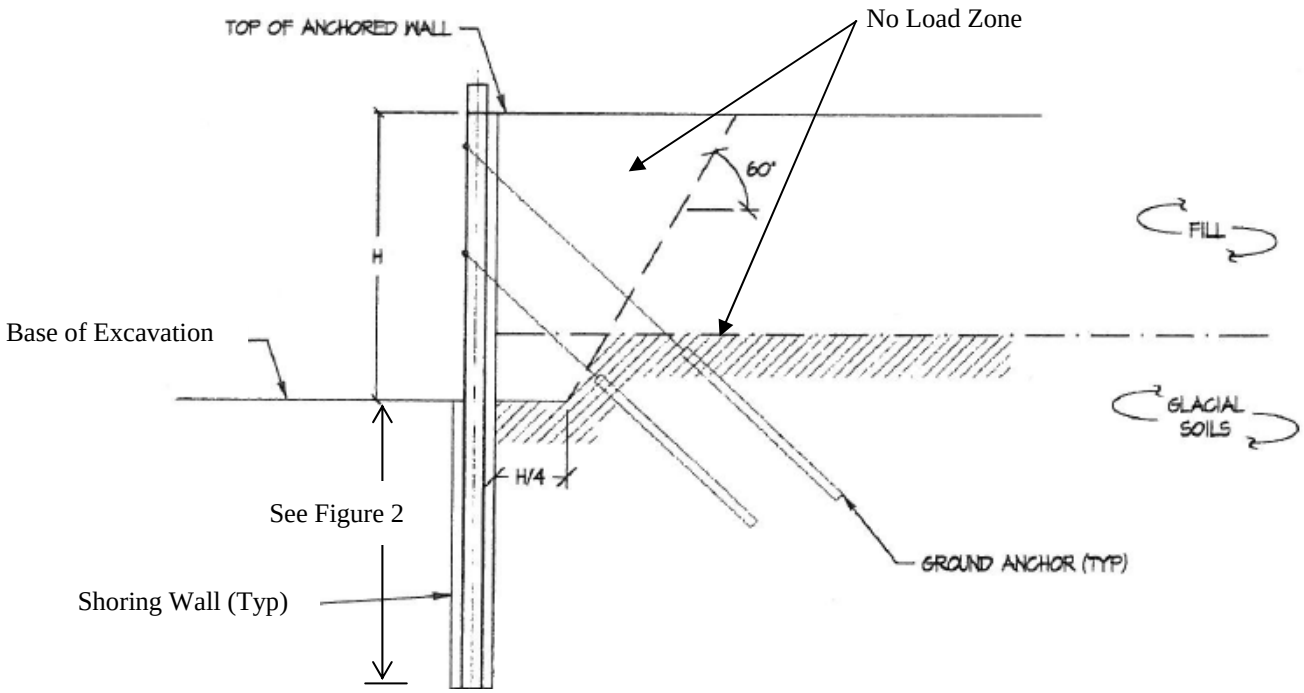

Figure 1. Typical no-load zone offset and inclination.

Bond Adhesion: We do not recommend setting anchor bond zones in non-glacial soils, ESUs – 1, 2, and 3, because of the risk of unacceptable, long-term creep. We do recommend setting anchor bond zones in ESU 5 (very dense, cohesionless sand and gravel), ESU 7 (very stiff to hard cohesive clay and silt), and ESU 4 & 8 (Glacial till & till-like deposits).

Table 5-3 from FHWA NHI-05-039 can be used to estimate preliminary grout to ground adhesion for various soil types. In Table 5-3, ESUs 4, 5 and 8 roughly correspond to "Sand (fine-coarse, med.-very dense)" and "Glacial Till (medium – very dense, cemented)". ESU 7 corresponds to "Silt & Clay (Stiff, dense to very dense)".

Based on local practice and our experience with the shoring at the 505 First Avenue Building, we recommend an unfactored adhesion of 10 ksf anchor bonds set in glacial soils and a minimum factor of safety of 2 for the grout-to-ground bond strength.

Table 5-3 suggests that adhesion values much higher than 10 ksf may be obtainable in glacial soils. If the CJV design requires adhesion greater than 10 ksf, we recommend discussion with a shoring specialty contractor with experience in the Seattle region.

Table 5-3. Summary of Typical α_{bond} (Grout-to-Ground Bond) Values for Micropile Design.

Soil / Rock Description	Grout-to-Ground Bond Ultimate Strengths, kPa (psi)			
	Type A	Type B	Type C	Type D
Silt & Clay (some sand) (soft, medium plastic)	35-70 (5-10)	35-95 (5-14)	50-120 (5-17.5)	50-145 (5-21)
Silt & Clay (some sand) (stiff, dense to very dense)	50-120 (5-17.5)	70-190 (10-27.5)	95-190 (14-27.5)	95-190 (14-27.5)
Sand (some silt) (fine, loose-medium dense)	70-145 (10-21)	70-190 (10-27.5)	95-190 (14-27.5)	95- 240 (14-35)
Sand (some silt, gravel) (fine-coarse, med.-very dense)	95-215 (14-31)	120-360 (17.5-52)	145-360 (21-52)	145-385 (21-56)
Gravel (some sand) (medium-very dense)	95-265 (14-38.5)	120-360 (17.5-52)	145-360 (21-52)	145-385 (21-56)
Glacial Till (silt, sand, gravel) (medium-very dense, cemented)	95-190 (14-27.5)	95-310 (14-45)	120-310 (17.5-45)	120-335 (17.5-48.5)
Soft Shales (fresh-moderate fracturing, little to no weathering)	205-550 (30-80)	N/A	N/A	N/A
Slates and Hard Shales (fresh-moderate fracturing, little to no weathering)	515-1,380 (75-200)	N/A	N/A	N/A
Limestone (fresh-moderate fracturing, little to no weathering)	1,035-2,070 (150-300)	N/A	N/A	N/A
Sandstone (fresh-moderate fracturing, little to no weathering)	520-1,725 (75.5-250)	N/A	N/A	N/A
Granite and Basalt (fresh-moderate fracturing, little to no weathering)	1,380-4,200 (200-609)	N/A	N/A	N/A

Type A: Gravity grout only
Type B: Pressure grouted through the casing during casing withdrawal
Type C: Primary grout placed under gravity head, then one phase of secondary "global" pressure grouting
Type D: Primary grout placed under gravity head, then one or more phases of secondary "global" pressure grouting

5. SEISMIC LIQUEFACTION

Seismic liquefaction was evaluated for the 108- and 1,000-year events for the ESU 2 and ESU 3 soils. These soils both lose significant strength and will settle due to seismic shaking. Our preliminary estimate of vertical ground settlements are 1 to 3 feet if these soils are not stabilized. For comparison, ESU 1 soils are not expected below roadway structures in the south portal excavation, and the glacial soils (ESU 4 and higher) are not susceptible to liquefaction.

Ground improvement can be used to mitigate liquefaction induced settlement and loss of soil strength below roadway structures south of about stations 196+00 to 196+50. We understand that both jet grouting and stone columns are being considered for ground improvement. Some of the advantages of stone columns compared to jet grouting include little or no spoils (depending on construction method), greater resistance to washout compared to grout, and the cost of stone columns is typically much less than jet grouting. An advantage of jet grouting compared to stone columns is that the treated soil volume can be made impermeable and the strength of the formation can be controlled.

The RFP reference documents show a construction scheme wherein virtually all of the potentially unsuitable material is removed and replaced with non-liquefiable material which would also be suitable for direct support of foundation elements and wall systems. These two general approaches need to be evaluated by the CJV team based on risk and cost.

6. FOUNDATION CONSIDERATIONS

We anticipate that permanent vertical walls will incorporate the slurry or secant pile shoring walls. Steel soldier piles may be incorporated into the slurry wall and may extend below the base of the excavation to provide foundation support and kick-out resistance.

Secant or slurry pile walls must have sufficient vertical and lateral resistance to resist vertical and horizontal tieback forces and soil and groundwater lateral pressures. The wall and soldier piles should bear in very dense, glacially overridden soils. Shoring should be founded a minimum of 10 feet below the excavation bottom or 10 feet into glacially over-consolidated soils; whichever is deeper.

6.1. Shoring Elements

The vertical bearing capacity of shoring wall sections/panels can be calculated as shown in Figure 2, below.

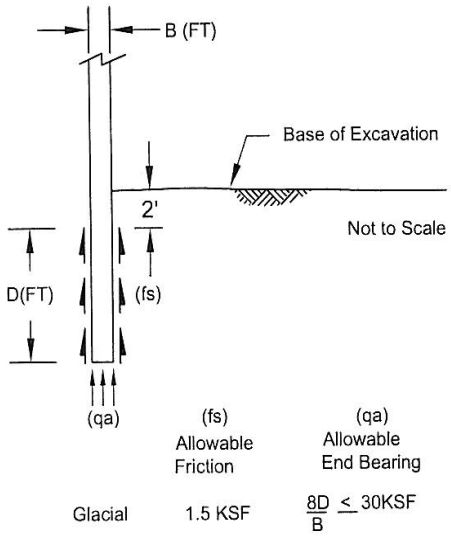

Figure 2. Vertical capacity of shoring wall.

6.2 Shallow Foundations and Structures

Allowable bearing pressures for foundations on areas of ground improvement are recommended below.

Stone Column Improved Soils. For preliminary design, assume 3-foot-diameter stone columns on a 7-foot, center-to-center spacing. The preliminary allowable bearing pressure for shallow foundations founded on improved soil is expected to be about 4 to 5 kips per square foot.

Jet Grout Improved Soils. The bearing capacity of jetted grout/soilcrete can be controlled by the grout formulation and the degree of soil mixing. Unconfined compressive strength of the soilcrete can be about 100 to 1000 psi.

Allowable bearing pressures for continuous wall and spread footings bearing on glacially overridden soils (ESUs 5, 7 and 8) typically vary from about 8 to 12 kips per square foot in the Seattle region. Ultimate bearing pressures for spread footings are also provided in Table 13 of Appendix G5 for interpreted geologic units Qvt, Qpnf, and Qpnc. We generally do not recommend founding shallow foundations in Holocene deposits.

6.3 Settlement

Stone Column Settlement Recommendations. For preliminary design using 3-foot-diameter stone columns on a 7-foot, center-to-center spacing, the expected settlement for bearing pressures of 4 to 5 ksf is1 to 2 inches for stone columns extending into glacial soils.

Jet Grouting Settlement Recommendations. Settlement of jet grouted soils is likely negligible provided the grouted zone bears upon dense glacial soils. If the jet grouted zone bears on stone column ground improvement, 1 to 2 inches of settlement can be expected depending on the column length and replacement ratio.

Settlement of continuous wall and spread footing bearing directly upon glacially overconsolidated soils (ESUs 5, 7 and 8), are expected to settle less than 1 inch.

6.4. Resistance to Hydrostatic Uplift

Structures founded below the groundwater table will need to resist buoyant uplift forces. North of about stations 196+00 to 196+50, the cut and cover structures will be founded on glacially overridden soils and can use earth anchors. Grout-to-ground adhesion values for tiedowns may be estimated the same as for shoring wall tiebacks.

South of stations 196+00 to 196+50, ground improvement will be required. Resistance to uplift may be achieved by earth anchors extending into ground improved by jet grouting. Alternatively, where stone columns are used for ground improvement, tiedown anchors can extend into the glacially overridden soils below the stone column zone.

The resistance of earth anchors used to resist hydrostatic uplift may be estimated using the values previously presented for tieback anchors and considering dead weight as shown in Figure 54, reproduced below, from FHWA Publication No. FHWA-IF-99-015.

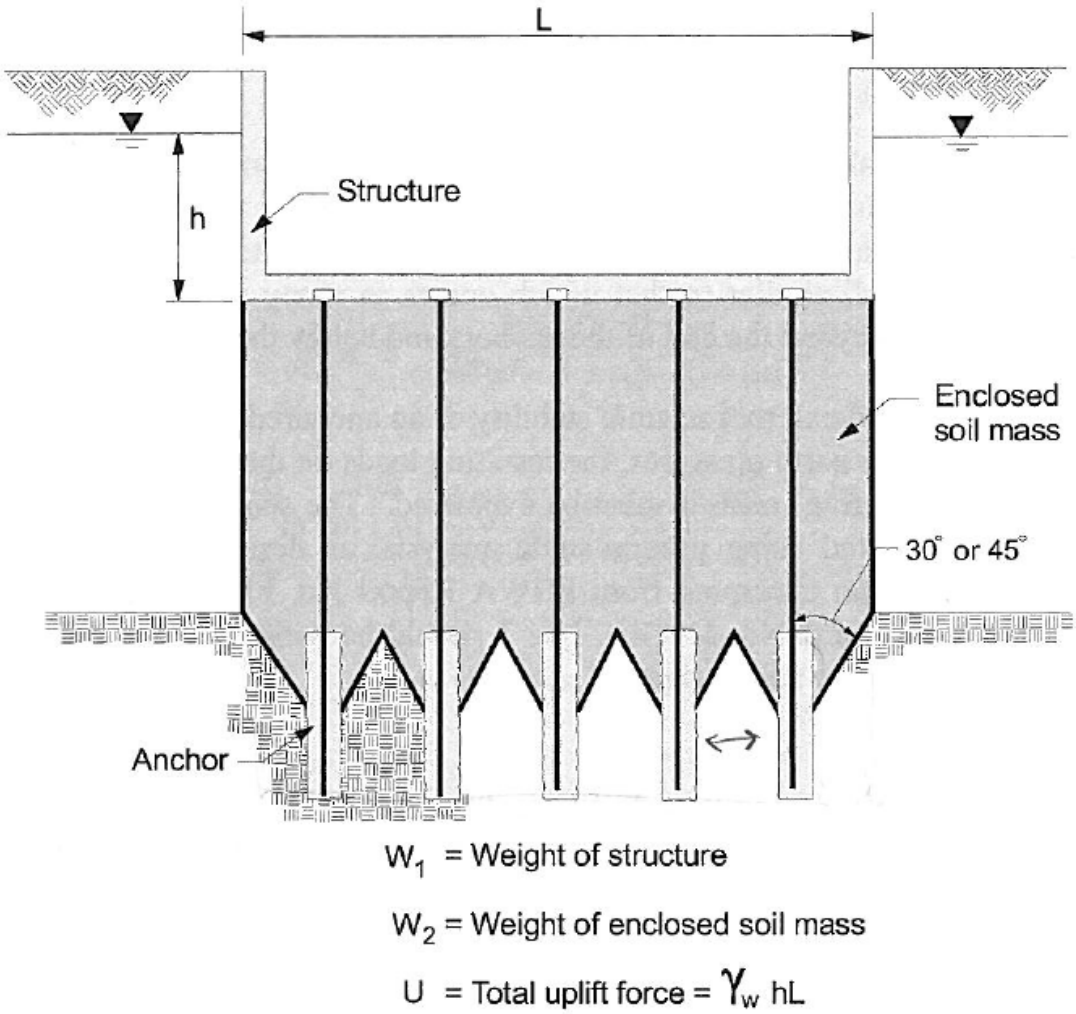

Figure 54 from FHWA Publication No. FHWA-IF-99-015, Geotechnical Engineering Circular No. 4, Ground Anchors and Anchored Systems, Section 5.9.4.

Hydrostatic uplift is resisted when $U = W_1 + W_2$, where W_1 and W_2 are the weights of the structure and the enclosed ground, respectively, and U is the total uplift force resulting from the uplift pressure $\gamma_w h$.

7. Closing

We appreciate the opportunity to provide these recommendations and trust that this memo meets your current needs. Please contact us if you have any questions.

Attachments:
Figures 4, 5, 6 and 7 of Appendix G4.E

J:\Jobs\1763800\PreliminaryGeotechnicalRecommendations_SouthPortalELHMemo.doc

GENERALIZED ENGINEERING SOIL UNIT EXPLANATION

1 ENGINEERED AND NON-ENGINEERED FILL:
Includes granular and cohesive FILL

2 RECENT GRANULAR DEPOSITS:
Loose to dense SILT and SAND with gravel; includes normally consolidated alluvium, beach deposits, reworked glacial deposits, and recessional ice-contact deposits.

3 RECENT CLAY AND SILT:
Soft to very stiff CLAY and SILT with fine sand beds; includes normally consolidated estuarine deposits, and recessional lacustrine deposits.

4 TILL DEPOSITS:
Dense to very dense, silty SAND and GRAVEL, and hard, silty CLAY with sand and gravel; cobbles and boulders are common in these deposits; includes glacially overconsolidated till, glaciomarine drift, and till-like deposits.

5 COHESIONLESS SAND AND GRAVEL:
Very dense SAND and GRAVEL to SAND with variable silt; cobbles can be found in these deposits; includes glacially overconsolidated fluvial and glacial outwash deposits.

6 COHESIONLESS SILT AND FINE SAND: Very dense SILT, silty fine SAND, and fine sandy SILT with trace of clay; predominantly cohesionless; includes glacially overconsoidated lacustrine deposits.

7 COHESIVE CLAY AND SILT:
Very stiff to hard, silty CLAY and clayey SILT with trace of sand and gravel; scattered cobbles and boulders can be found in these deposits; includes glacially overconsolidated lacustrine, peat, and paleosol deposits.

8 TILL-LIKE DEPOSITS:
Dense to very dense, unsorted mixture of SILT, SAND, and GRAVEL, but are highly variable spatially; cobbles and boulders are common in this deposit. This ESU can have a similar appearance to the Till but can grade in a short distance to a clean or relatively clean sand. The spatial variability of the Till-Like ESU makes it difficult to correlate between borings. This unit can be adjacent to, and transitional in nature with, Cohesionless Sand and Gravel and Till ESUs as described above.

PEAT OR WOOD

RELATIVE DENSITY / CONSISTENCY

COARSE-GRAINED SOILS		FINE-GRAINED/COHESIVE SOILS	
N, SPT, BLOWS/FT.	RELATIVE DENSITY	N, SPT, BLOWS/FT.	RELATIVE CONSISTENCY
0 - 4	Very loose	<2	Very soft
4 - 10	Loose	2 - 4	Soft
10 - 30	Medium dense	4 - 8	Medium stiff
30 - 50	Dense	8 - 15	Stiff
Over 50	Very dense	15 - 30	Very stiff
		Over 30	Hard

NOTES

1. This profile is constructed from surface elevations, project alignment, and grades provided by Parsons Brinckerhoff, *"BT MAY 10 - To Nykamp 051910.dgn"* on 5-19-10, and are based on the North American Vertical Datum 1988 (NAVD88). The subsurface conditions shown are generalized from material observed from borings conducted by Shannon & Wilson and others for this and previous studies. The geology, as encountered in the borings, has been projected into the plane of the profile or section. Elevations and contacts should be considered approximate. Variations between the profile and actual conditions are likely to exist.

2. Water levels shown were measured on various dates. Groundwater fluctuations should be expected.

BORING LOG LEGEND
(Project Borings)

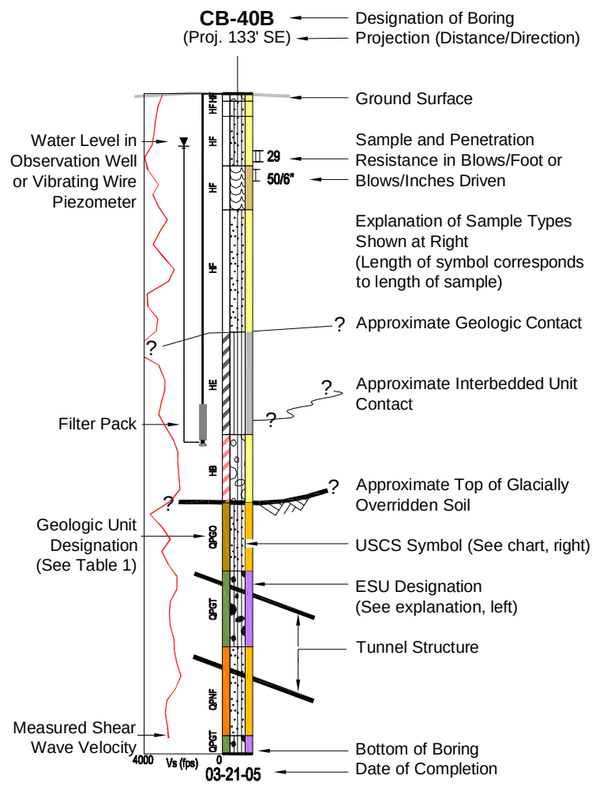

NOTE: Borings shown as gray on profiles and cross sections represent areas where subsurface information exits on both sides of the alignment and the contact information was interpolated along the centerline.

BORING LOG LEGEND
(Non-Project Borings)

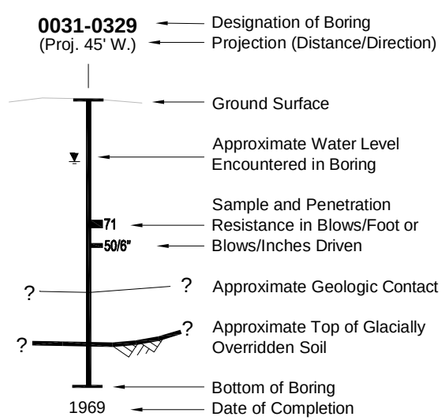

SOIL AND SAMPLING LEGEND

UNIFIED SOIL CLASSIFICATION SYSTEM
(From USACE Tech Memo 3-357)

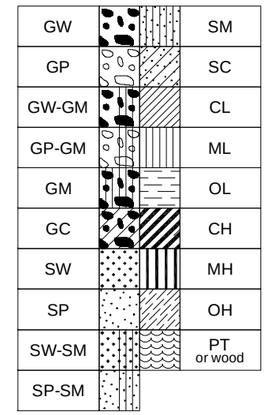

SAMPLE TYPES

- * Sample Not Recovered
- 2" O.D. Split Spoon Sample with 140 lb. Hammer (standard penetration test - SPT)
- 2.5" O.D. Split Spoon Sample with 300 lb. Hammer (non-standard)
- 3" O.D. Split Spoon Sample with 300 lb. Hammer (non-standard)
- Sonic Coring Run
- S 3" O.D. Shelby Tube Sample
- O Osterberg Sample
- P Pitcher Barrel Sample
- P 2.5" O.D. Thin Wall Tube Sample
- G Grab Sample
- Soil Coring Run

1. Dual Symbols (symbols separated by a hyphen, i.e., SP-SM, slightly silty fine SAND) are used for soils with between 5% and 12% fines or when the liquid limit and plasticity index values plot in the CL-ML area of the plasticity chart.

2. Borderline symbols (symbols separated by a slash, i.e., CL/ML, silty CLAY/clayey SILT; GW/SW, sandy GRAVEL/gravelly SAND) indicate that the soil may fall into one of two possible basic groups, based on ASTM D 2488-93 Visual Manual Classification System. The graphic symbol of only the first group symbol is shown on the profile.

GEOLOGIC UNIT NOMENCLATURE

GEOLOGIC AGE DESIGNATION		DEPOSITIONAL ENVIRONMENT, GEOLOGIC PROCESS, OR LITHOLOGY	
H = Holocene		f = fill e = estuarine rw = reworked glacial	a = alluvium b = beach
Q = Quaternary	v = Vashon	r = recessional	l = lacustrine i = ice contact
		t = till (lodgment)	
	p = Pre-Vashon 6 or more glacial and interglacial episodes	n = nonglacial (interglacial)	f = fluvial l = lacustrine p = peat s = soil (paleosol)
		g = glacial	d =till-like o = outwash t = till m = marine l = lacustrine

Present
13,500 yrs BP *
15,000 yrs BP *

LEGEND
BP Before Present
* Dates in Central Puget Lowland may differ from onset and end of Vashon (late Pleistocene) glacial episode

Each geologic unit has a two- to four-letter abbreviation composed of a leading capital letter signifying geologic age, followed by one or more lowercase letters indicating further breakdown of geologic age, depositional environment or geologic process.

Refer to Table 1 for description of the geologic units.

Alaskan Way Viaduct and Seawall Program
SR 99 Bored Tunnel Alternative
Seattle, Washington

LEGEND AND NOTES FOR GENERALIZED SUBSURFACE PROFILES AND CROSS SECTIONS

June 2010 21-1-20840-062

SHANNON & WILSON, INC.
Geotechnical and Environmental Consultants

FIG. 4

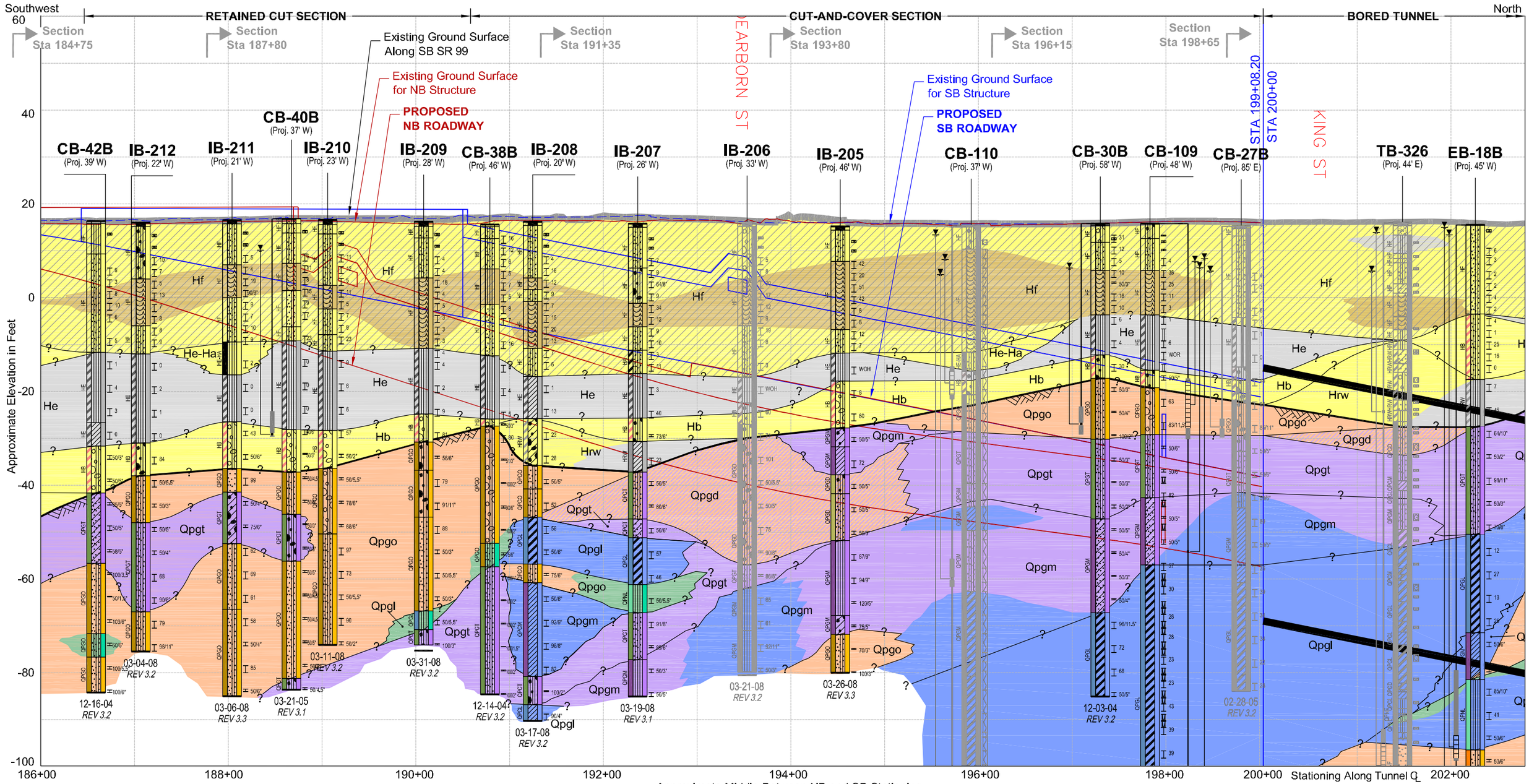

NOTES

1. Existing grade along proposed west wall adapted from City of Seattle GIS data files *"topo_all.dwg"* received 3-11-02. Existing grade along SB SR99 and proposed structures provided by Parsons Brinckerhoff *"BT May 10 - To Nykamp 051910.dgn"*, received 5-19-10.
2. This profile is based on subsurface explorations performed through March 2010. Variations will exist between this profile and actual conditions.
3. See Figure 4 for legend and geologic unit explanation.
4. Vertical Datum: NAVD88.

Alaskan Way Viaduct and Seawall Program
SR 99 Bored Tunnel Alternative
Seattle, Washington

GENERALIZED SUBSURFACE PROFILE A-A' SOUTH AREA

June 2010 | 21-1-20840-062

SHANNON & WILSON, INC.
Geotechnical and Environmental Consultants

FIG. 5

Filename: J:\211\20840-073\21-1-20840-073 Profiles and Sections (CL_PROF_TUNNEL).dwg Layout: S A-A' CT5 Date: 06-02-2010 Login: sac

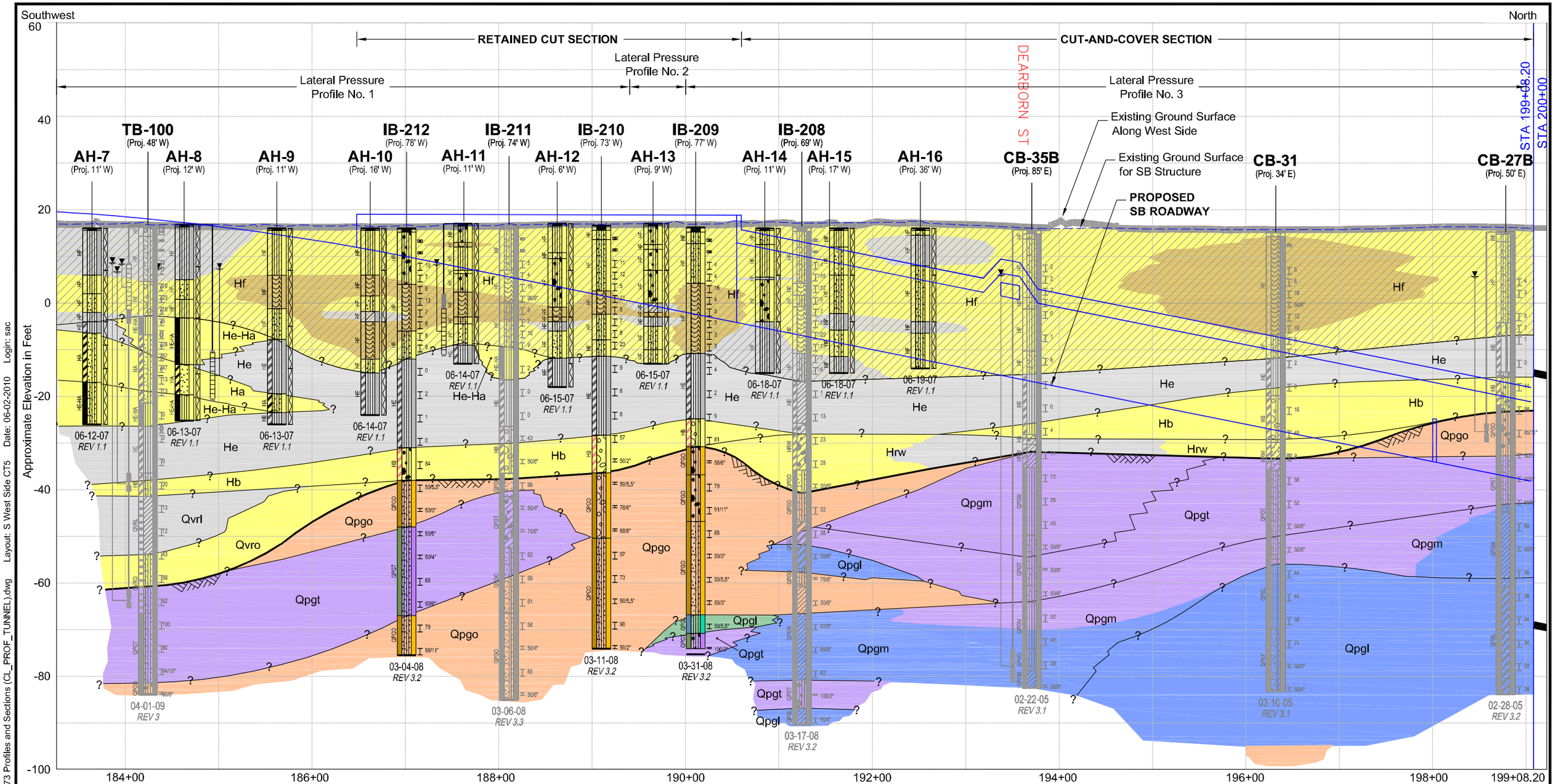

0 20 40
Vertical Scale in Feet

0 100 200
Horizontal Scale in Feet

Vertical Exaggeration = 5X

NOTES

1. Existing grade along proposed west wall adapted from City of Seattle GIS data files *"topo_all.dwg"* received 3-11-02. Existing grade along SB SR99 and proposed structures provided by Parsons Brinckerhoff *"BT May 10 - To Nykamp 051910.dgn"*, received 5-19-10.
2. This profile is based on subsurface explorations performed through March 2010. Variations will exist between this profile and actual conditions.
3. See Figure 4 for legend and geologic unit explanation.
4. Vertical Datum: NAVD88.

Alaskan Way Viaduct and Seawall Program
SR 99 Bored Tunnel Alternative
Seattle, Washington

GENERALIZED SUBSURFACE PROFILE B-B' SOUTH AREA, WEST SIDE

June 2010 21-1-20840-062

SHANNON & WILSON, INC.
Geotechnical and Environmental Consultants

FIG. 6

Filename: J:\211\20840-073\21-1-20840-073 Profiles and Sections (CL_PROF_TUNNEL).dwg Layout: S West Side CT5 Date: 06-02-2010 Login: sac

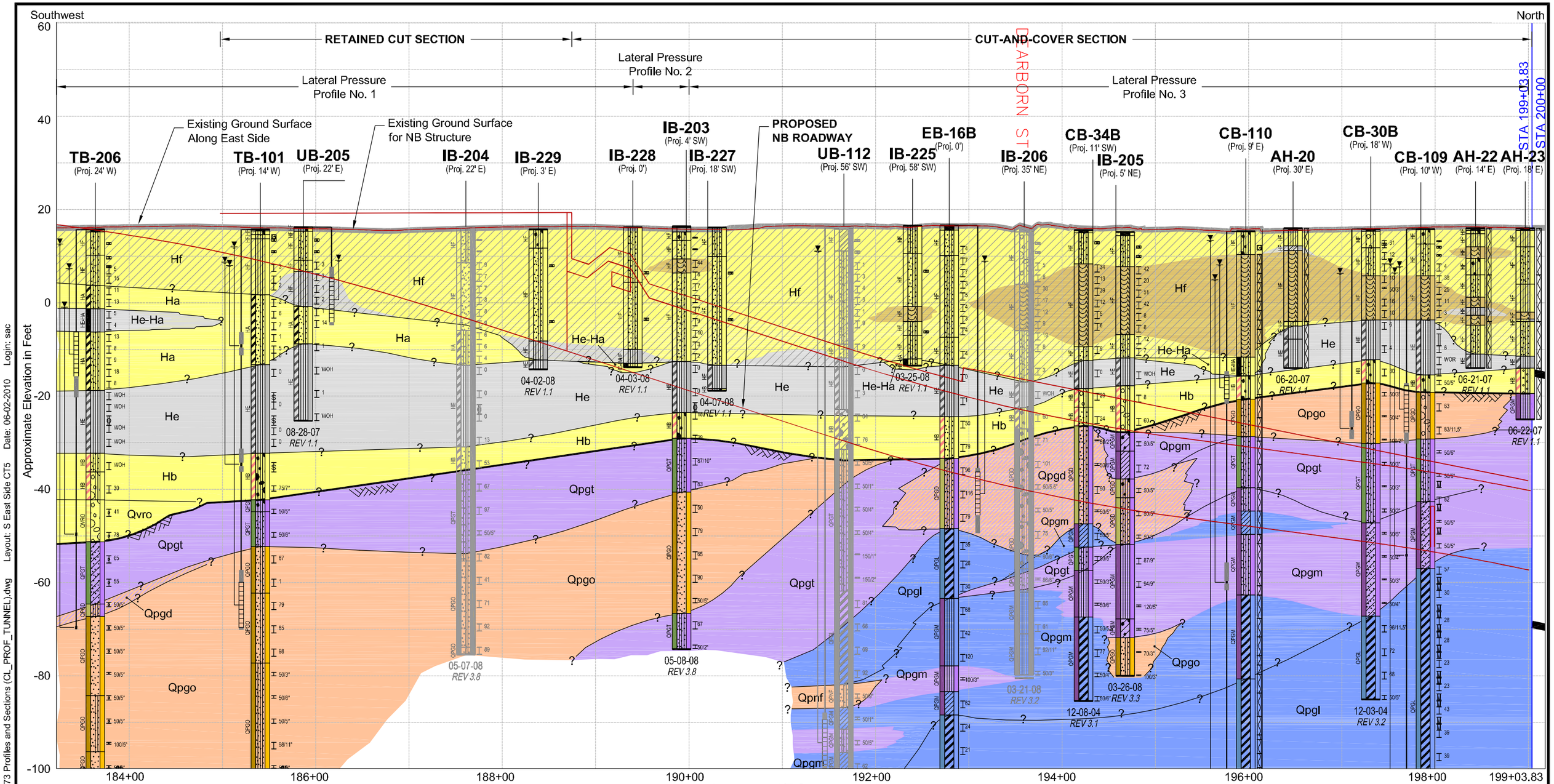

NOTES

1. Existing grade along proposed west wall adapted from City of Seattle GIS data files *"topo_all.dwg"* received 3-11-02. Existing grade along SB SR99 and proposed structures provided by Parsons Brinckerhoff *"BT May 10 - To Nykamp 051910.dgn"*, received 5-19-10.
2. This profile is based on subsurface explorations performed through March 2010. Variations will exist between this profile and actual conditions.
3. See Figure 4 for legend and geologic unit explanation.
4. Vertical Datum: NAVD88.

Alaskan Way Viaduct and Seawall Program
SR 99 Bored Tunnel Alternative
Seattle, Washington

GENERALIZED SUBSURFACE PROFILE C-C'
SOUTH AREA, EAST SIDE

June 2010 | 21-1-20840-062

SHANNON & WILSON, INC.
Geotechnical and Environmental Consultants

FIG. 7

Filename: J:\211\20840-073\21-1-20840-073 Profiles and Sections (CL_PROF_TUNNEL).dwg Layout: S East Side CT5 Date: 06-02-2010 Login: sac

MEMORANDUM

DATE: **August 2, 2010**

TO: **Gerald Dorn, PE, HNTB**

FROM: Garry Horvitz, PE; Matt Veenstra, PE; Hart Crowser

RE: **Preliminary Geotechnical Design Recommendations**
Shoring Deformation
Alaska Way Tunnel
17638-00

CC:

Dear Mr. Dorn:

This memo presents preliminary estimates of shoring movements in the north and south portals. Estimates are based upon a paper by Clugh and O'Rourke (1990) and Appendix G4.E of the RFP. Average maximum lateral wall movement and maximum vertical settlement are taken as 0.2 and 0.15 percent of the excavation depth, respectively. The depth of excavation is taken from cross sections drafted by HNTB (south portal) and Figures 15 and 16 of Appendix G4.E (north portal).

Results are presented below:

1700 Westlake Avenue North, Suite 200
Seattle, Washington 98109-6212
Fax 206.328.5581
Tel 206.324.9530

North Portal - West Side

Assumes granular soil - triangular settlement profile

Station	H	Maximum lateral movement (inch)	Max Settlement (inch)	Distance From Back of Wall to Where Settlement is zero
300+00	72	1.73	1.3	144
301+00	47	1.13	0.8	94
302+00	42	1.01	0.8	84
303+00	35	0.84	0.6	70
304+00	30	0.72	0.5	60
305+00	23	0.55	0.4	46
306+00	26	0.62	0.5	52
307+00	15	0.36	0.3	30
308+00	10	0.24	0.2	20

North Portal - East Side

Assumes granular soil - triangular settlement profile

Station	H	Maximum lateral movement (inch)	Max Settlement (inch)	Distance From Back of Wall to Where Settlement is zero
300+00	72	1.73	1.3	144
301+00	66	1.58	1.2	132
302+00	60	1.44	1.1	120
303+00	53	1.27	1.0	106
304+00	49	1.18	0.9	98
305+00	38	0.91	0.7	76
306+00	33	0.79	0.6	66
307+00	25	0.60	0.5	50
308+00	19	0.46	0.3	38

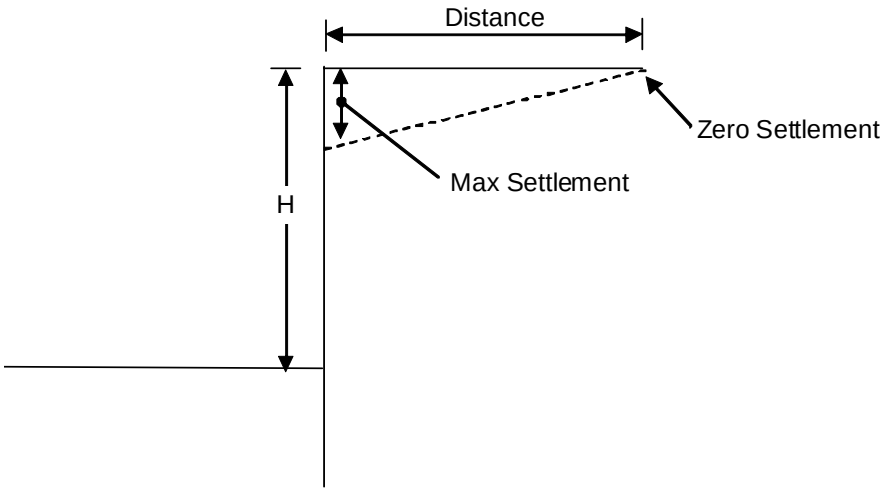

South Portal - West Side

Assumes granular soil - triangular settlement profile

Station	H	Maximum lateral movement (inch)	Max Settlement (inch)	Distance From Back of Wall to Where Settlement is zero
180+00	0	0.00	0.0	0
182+00	0	0.00	0.0	0
184+00	0	0.00	0.0	0
184+50	0	0.00	0.0	0
185+00	0	0.00	0.0	0
185+50	0	0.00	0.0	0
186+00	0	0.00	0.0	0
186+50	0	0.00	0.0	0
187+00	0	0.00	0.0	0
187+50	0	0.00	0.0	0
188+00	0	0.00	0.0	0
188+50	0	0.00	0.0	0
189+00	0	0.00	0.0	0
189+50	0	0.00	0.0	0
190+00	0	0.00	0.0	0
190+50	0	0.00	0.0	0
191+00	0	0.00	0.0	0
191+50	27	0.65	0.5	54
192+00	28	0.67	0.5	56
192+50	30	0.72	0.5	60
193+00	32	0.77	0.6	64
193+50	35	0.84	0.6	70
193+75	35	0.84	0.6	70
194+00	35	0.84	0.6	70
194+50	37	0.89	0.7	74
195+00	40	0.96	0.7	80
195+50	41	0.98	0.7	82
196+00	42	1.01	0.8	84
196+50	44	1.06	0.8	88
197+00	68	1.63	1.2	136
197+50	69	1.66	1.2	138
198+00	70	1.68	1.3	140
198+50	73	1.75	1.3	146
199+00	74	1.78	1.3	148
199+03	74	1.78	1.3	148

South Portal - East Side

Assumes granular soil - triangular settlement profile

Station	H	Maximum lateral movement (inch)	Max Settlement (inch)	Distance From Back of Wall to Where Settlement is zero
180+00	0	0.00	0.0	0
182+00	0	0.00	0.0	0
184+00	0	0.00	0.0	0
184+50	7	0.17	0.1	14
185+00	11	0.26	0.2	22
185+50	14	0.34	0.3	28
186+00	18	0.43	0.3	36
186+50	21	0.50	0.4	42
187+00	24	0.58	0.4	48
187+50	27	0.65	0.5	54
188+00	30	0.72	0.5	60
188+50	33	0.79	0.6	66
189+00	32	0.77	0.6	64
189+50	37	0.89	0.7	74
190+00	20	0.48	0.4	40
190+50	21	0.50	0.4	42
191+00	23	0.55	0.4	46
191+50	27	0.65	0.5	54
192+00	28	0.67	0.5	56
192+50	32	0.77	0.6	64
193+00	33	0.79	0.6	66
193+50	35	0.84	0.6	70
193+75	35	0.84	0.6	70
194+00	58	1.39	1.0	116
194+50	61	1.46	1.1	122
195+00	63	1.51	1.1	126
195+50	63	1.51	1.1	126
196+00	65	1.56	1.2	130
196+50	66	1.58	1.2	132
197+00	68	1.63	1.2	136
197+50	69	1.66	1.2	138
198+00	70	1.68	1.3	140
198+50	73	1.75	1.3	146
199+00	74	1.78	1.3	148
199+03	74	1.78	1.3	148

We appreciate the opportunity to provide these recommendations and trust that this memo meets your current needs. Please contact us if you have any questions.

MEMORANDUM

DATE: **August 2, 2010**

TO: **Gerald Dorn, PE, HNTB**

FROM: Garry Horvitz, PE; Matt Veenstra, PE; Hart Crowser

RE: **Preliminary Geotechnical Design Recommendations**
P-Y Parameters for Lateral Pile Analysis
Alaska Way Tunnel
17638-00

CC:

Dear Mr. Dorn:

The following general recommendations are for preliminary, conceptual design. Once the design, including location of drilled shafts or piles is more certain, determination of P-Y soil parameters should be determined at each shaft location based upon the nearest geotechnical boring(s).

Design soil parameters for laterally loaded shaft analysis are provided in Tables 1. When performing the analyses, we recommend modeling the soil/shaft conditions such that the contribution of the overburden soil above the top of the shaft is included. This approach will provide a more realistic modeling scenario versus modeling the ground surface as if it were equal to the top of the shaft.

In accordance with the latest revision of Chapter 6 of the GDM (dated October 2008), a p-multiplier in LPILE analyses is recommended for use with the static soil property values in liquefiable soils when analyzing for liquefied conditions. The p-multipier is used to reduce the static P-Y curve to a liquefied curve. Corrected blow counts are used to determine the p-multiplier value based on the work by Brandenberg et al. (2007) and Boulanger et al. (2003). Additionally, as per RFP Appendix G5, Executive Summary, a 30 percent reduction in strength was applied to the soil parameters for the predominantly silty estuarine deposits when analyzing for liquefied conditions.

The resistance factor for lateral resistance of a single shaft or a shaft group is 1.0 according to GDM Table 8-11.

1700 Westlake Avenue North, Suite 200
Seattle, Washington 98109-6212
Fax 206.328.5581
Tel 206.324.9530

Table 1. Generalized LPILE Parameters – South Portal

Geo symbol	ESU	P-Y Soil Type	Effective Unit Weight (pci)	Friction Angle	E50	m_p[1]	su (psi)	P-Y Modulus (pci)
HF - above water	1	API Sand	0.069	33		1		90
HF - below water	1	API Sand	0.033	33		0.15		58
HF upper soft clay	1	Soft Clay (Matlock)	0.067		0.015	1	4.17	
HF - peat	Peat							
HA loose/liq.	2	API Sand	0.033	30		0.1		32
HE	3	API Sand	0.03	32 [24]		1		48 [5]
HRW	3	API Sand	0.03	33		1		58
QPGM	4	API Sand	0.039	42		1		192
QPGO	5	API Sand	0.039	42		1		192
QPGL	7	API Sand	0.039	40		1		155
HB	2	API Sand	0.039	42		1		192

[1] For Liquefied Conditions, the p-multiplier m_p should be applied during analysis.
Note: Liquefied Conditions inlcuded in [ ], otherwise same as static conditions.

Lateral Shaft Group Effect

GDM Section 8.12.2.3 provides guidelines for selecting Load Modifiers based on shaft spacing and direction of loading for use when analyzing shaft groups using the program LPILE. The design recommendations set forth in the GDM are summarized in Table 2.

Table 2 – Lateral Shaft Group Load Modifiers

Center-to-Center Spacing (in the direction of loading)	Load Modifiers (Pm)		
	Row 1	Row 2	Rows 3 and Higher
2D	0.45	0.33	0.25
3D	0.70	0.50	0.35
5D	1.00	0.85	0.70

The GDM indicates that the load multipliers for 2D spacing are the result of extrapolation based on very limited load test data. These values imply that a two-shaft group with spacing of 2D would have (0.45 + 0.33 = 0.78) less capacity than a single shaft.

Group reduction factors are typically only considered in the transverse loading direction (i.e., perpendicular to the alignment of the bridge structure).

We appreciate the opportunity to provide these recommendations and trust that this memo meets your current needs. Please contact us if you have any questions.

MEMORANDUM

DATE: August 10, 2010

TO: **Gerald Dorn, PE, HNTB**

FROM: Garry Horvitz, PE; Matt Veenstra, PE, Hart Crowser, Inc.

RE: **Preliminary Geotechnical Design Recommendations**
North Portal Structures
SR-99 Bored Tunnel
17638-00

CC: Rich Johnson, PE, HNTB

This memo summarizes preliminary design recommendations for the north portal, and addresses shoring, seismic liquefaction, and foundations.

1. SUBSURFACE CONDITIONS

Generalized soil profiles for the north portal area are presented in RFP Appendix G4.E, Figures 14 through 20, and are briefly summarized below.

Southbound Roadway, Center Alignment. The southbound structure ends at the tunnel entrance at station 300+00. The Southbound roadway is immediately underlain by Engineering Soil Unit (ESU) 8 from about station 300+00 to 303+00, then ESU 3 to about station 308+90. From about station 306+00 to 308+00 a 2- to 4-foot thick layer of peat and wood underlies the structure.

Northbound Roadway, Center Alignment. The northbound structure begins at the tunnel exit at about Station 300+00. The northbound roadway is immediately underlain by ESU 4 from about station 300+00 to 304+60, then ESU 2 to about station 305+20, then ESU 3 to about station 307+60, then ESU 2 to about station 308+90. The thickness of ESU 3 below the structure between stations 305+20 and 307+60 varies from near zero at the edges to about 13 feet at station 306+00.

The thickness of ESU 3 beneath the proposed roadway structures is as much as 30 feet in the vicinity of station 306+00 (see Figure 19, RFP Appendix G4.E).

1700 Westlake Avenue North, Suite 200
Seattle, Washington 98109-6212
Fax 206.328.5581
Tel 206.324.9530

2. GROUNDWATER

Explorations in the north portal area indicate that the regional groundwater table is about elevation +30 feet; perched groundwater as high as elevation +70 feet was also encountered.

Groundwater is typically below the north portal road structures though some areas near the tunnel may be below the groundwater table. The reference documents suggest that almost full-height hydrostatic pressures be used in the design of the cut-and-cover section. This approach would appear to be out of context with respect to typical design and construction methodology for deep excavations in this part of Seattle, as will be discussed further.

3. SHORING RECOMMENDATIONS

Lateral Earth Pressure
Lateral earth pressure diagrams for preliminary excavation shoring design are presented in RFP Appendix G4.E, Interim Letter CT-5, Figures 33 through 50 and 51. For final design, these preliminary values will need to be refined but appear to be reasonable for cost estimating purposes at this time.

No-Load Zone
The no-load zone for tieback anchors should be offset a distance of H/4 from the back of the wall and angled upwards at 60 degrees from horizontal. H is the height of the wall above the base of the excavation. The bottom of the no-load zone is located at the base of the excavation. The no-load zone should not include any soil within ESUs 1, 2 and 3; all anchors should derive 100 percent of their grout-to-ground capacity from the underlying glacially overconsolidated soils.

Anchor Declination
We anticipate typical anchor declinations of about 30 to 40 degrees down from horizontal. Normally, tieback anchors in this area are installed at angles of 20 to 30 degrees. Steeper angles may be necessary at some locations because of the depth to the glacially consolidated soils that will need to be used for the bond zone.

Bond Adhesion
We do not recommend setting anchor bond zones in non-glacial soils (ESUs 1, 2, and 3) because of the risk of unacceptable long-term creep. We do recommend setting anchor bond zones in ESU 5 (very dense, cohesionless sand and gravel), ESU 7 (very stiff to hard cohesive clay and silt), and ESUs 4 and 8 (glacial till and till-like deposits).

Based on local practice and our experience with the shoring at the 505 First Avenue Building, we recommend a preliminary unfactored adhesion of 5 kips per lineal foot (klf) for anchor bonds set in very dense glacial soils. This assumes that all tieback anchors would be pressure grouted.

If the CJV design requires adhesion greater than 5 klf, we recommend discussion with a shoring specialty contractor with experience in the Seattle area. Alternatively, the adhesion values presented on page 17 of Appendix G4.E can be used for estimating adhesion values.

4. SEISMIC LIQUEFACTION

Seismic liquefaction was evaluated for the 108- and 1,000-year events for the ESU 2 (Recent Granular Deposits) and ESU 3 (Recent Clay and Silt) soils. These soils are subject to strength loss and settlement due to seismic shaking. Our preliminary estimate of vertical ground settlement is 0 to 1 feet. Most settlement will occur in ESU 3 in the vicinity of station 306+00. This area is outside (i.e., north of) the limits of the contract. Within the contract area, only a very small portion at the north end is within these softer, more liquefaction-prone soils. Where liquefaction-prone soils are encountered, they are above the static water table. Therefore, we expect that only isolated pockets of loose material within limited zones of perched groundwater may lose strength and liquefy. The glacial soils (ESU 4 and higher) are generally not susceptible to liquefaction.

5. FOUNDATION CONSIDERATIONS

Axial Capacity of Wall Systems
Preliminary design values for vertical soil resistance of wall systems can be determined from Table 2 of RFP Appendix G4.E, Interim Letter CT-5.

Secant or slurry pile walls must have sufficient vertical and lateral strength to resist vertical and horizontal tieback forces and soil and groundwater lateral pressures. Where possible, we recommend that continuous portions of the wall and soldier piles are embedded a minimum of 10 feet in glacially overridden deposits. Where glacially overridden deposits are very deep, shoring should be founded a minimum of 10 feet below the excavation bottom. In very soft soils, such as ESU 3, shoring elements may need to extend more than 10 feet below the base of the excavation to achieve bearing capacity, resist kickout, and maintain tolerable settlement.

Shallow Foundations
We recommend that shallow foundations bear in either glacially overconsolidated or improved soils. Recommendations for allowable bearing pressure and settlement are outlined below. From

the profiles shown in Appendix G4.E (see Generalized Subsurface Profile D-D, North Area, West Side, Figure 15) it appears that a short segment at the extreme north end of the alignment will be founded within the recent deposits (ESU 2 and 3), and may require the use of lower bearing pressures, overexcavation and replacement and/or some form of ground improvement. Boring TB-301 shows suitable bearing soils for shallow foundations at the foundation elevation. North of that boring, at the location of Boring TB-328, very loose materials were encountered that could require the use of deep foundations. The end of the cut-and-cover tunnel is between these two borings so it is not possible to say with any certainty where the favorable conditions end and unfavorable conditions begin.

- *Glacially Overconsolidated Soils*

Allowable bearing pressures for continuous wall and spread footings bearing on glacially overridden soils (ESUs 5, 7 and 8) typically vary from about 8 to 12 kips per square foot (ksf) in the Seattle area. Settlement is expected to be less than 1 inch.

- *Overexcavated and Replaced Soils*

If the depth of unsuitable soils at the extreme north end are overexcavated and replaced with dense structural fill, then allowable bearing pressures on the order of four to five ksf can be used.

- *Stone Column Improved Soils*

For preliminary design, assume 3-foot-diameter stone columns on a 7-foot, center-to-center spacing extending down to glacially overconsolidated soils. The preliminary allowable bearing pressure for shallow foundations founded on improved soil is expected to be about 4 to 5 ksf. Settlement is expected to be on the order of 1 to 2 inches.

- *Jet Grout Improved Soils*

The bearing capacity of jetted grout can be controlled by the grout formulation and the degree of soil mixing. Unconfined compressive strength of the soilcrete can be about 100 to 1000 pounds per square inch (psi). Settlement of jet grouted soils is likely negligible, provided the grouted zone bears upon dense glacial soils. If the jet-grouted zone bears on stone column ground improvement, 1 to 2 inches of settlement can be expected depending on the column length and replacement ratio.

Base Slab Design

Base slabs founded below ESUs 1 through 3 (Holocene deposits) may bear directly upon the excavated soil. Preliminary design values of modulus of subgrade reaction (K_1) can be determined from Table 2 of RFP Appendix G4.E, Interim Letter CT-5.

The Holocene deposits are subject to liquefaction and settlement during a seismic event; therefore, base slabs founded in Holocene deposits should be supported by deep foundations or ground improvement extending into glacial soils.

Settlement of Road Structures
We expect that structural slabs bearing directly on glacial soils will experience long-term settlement due to dead loads less than 1 inch. Deformations due to traffic loads will depend upon the structural design of the base slab and modulus of subgrade reaction.

We expect that structural slabs founded in Holocene deposits will be supported by deep foundations or ground improvement extending into glacial soils. The long-term settlement due to dead loads for structures supported by deep foundations or ground improvement is less than 1 to 2 inches. The modulus of subgrade reaction for a slab bearing on deep foundation or ground improvement will be greater than unimproved soil. The increase in modulus is proportional to the size and spacing of deep foundations or the type and replacement ratio of ground improvement. Ground improvement may consist of stone columns or jet grouting. The improved soil modulus would be limited by the modulus of the stone columns or jet grout and the composite modulus would generally increase as the replacement ratio increased.

6. USE OF SOIL NAIL SHORING

Soil nailing is a shoring system that has gained popularity in the Seattle area because it tends to be more economical than conventional soldier pile/tieback shoring. At this site, soil nailing would need to take into account the presence of about 20 feet of unconsolidated fill soils and ESU 2 soils. The use of vertical elements (i.e., closely spaced small soldier piles) would likely be required to maintain face stability of the excavation lifts before applying shotcrete.

In addition, soil nailing is a passive system which can often have a tendency to move more than a conventional shoring system. Conventional shoring systems have the advantage of using post-tensioned tieback anchors.

Soil nailing would only be considered appropriate a far north as about Station 302+50. Settlement-sensitive buildings on either side of the alignment may preclude the use of soil nailing.

We understand that Malcolm Drilling is currently evaluating the economics of using soil nail shoring in this part of the alignment. Given the fact that conventional shoring will be required for at least a portion of the North portal cut-and-cover section, it may not reduce costs to introduce an additional construction method next to the soldier pile and tieback anchor walls.

7. DRAINAGE AND WATERPROOFING

Appendix G4.E addresses issues of drainage, waterproofing, and hydrostatic pressures. Typically, this portion of the tunnel would be treated as a below-grade structure associated with a building. The typical approach would be to hang drainage material on the shoring system. We recommend that synthetic drainage media be continuous over the face of the excavation. Appropriate waterproofing material can then be placed over this drainage material. The drainage media can be directed to suitable outlets at the base of the excavation where it can be tight-lined to a suitable outlet or sump pump system. The permanent wall can then be poured against the waterproofing. In this manner the permanent wall (either independent of the shoring system or incorporated into the shoring system if the shoring system is to be used for permanent support of the subgrade walls) can be designed for drained conditions and does not have to be designed for the full hydrostatic head.

The second paragraph on page 12 of Appendix G4.E contains a discussion on assumed groundwater elevations used by WSDOT in their preliminary recommendations for earth pressures. The temporary case for apparent earth pressures is based on active conditions and the permanent case is based on at-rest conditions. The regional water table is expressed at elevation +30 feet (more or less the top of the glacial till layer (i.e., top of ESU 4). The authors acknowledge that the perched groundwater level can be assumed commensurate with the bottom of the excavation if positive drainage is provided.

The use of full hydrostatic head is appropriate if no drainage is provided between the shoring wall and permanent wall. Given that the water that should be encountered within the depth of excavation is perched water and should therefore be of limited extent we would anticipate that flows to a long-term drainage system would be relatively low.

8. CLOSING

We appreciate the opportunity to provide these recommendations and trust that this memo meets your current needs. Please contact us if you have any questions.

J:\jobs\1763800\North Portal Memo.doc

MEMORANDUM

DATE: August 12, 2010

TO: Gerald Dorn, PE; HNTB

FROM: Garry Horvitz, PE; Hart Crowser, Inc.

RE: **Preliminary Geotechnical Design Recommendations**
Axial Design of Drilled Shafts and Secant Pile Walls
17638-00

This memorandum presents our preliminary design recommendations for the secant pile wall and drilled shaft foundations for the portals. The values provided below should be considered preliminary and used only for initial layout and sizing of the structural elements. Final design must consider geotechnical resistances and liquefaction downdrag at each drilled shaft foundation; secant pile walls should be evaluated at each significant change in soil conditions and/or excavation depth.

SECANT PILE WALL RESISTANCES

For the secant pile wall, our south portal memo references page 18 and Table 2 of RFP Appendix G4.E. Table 2 provides ultimate end bearing and side friction values for secant piles, page 18 provides recommended resistance factors based on the GDM.

Side resistance of the secant pile wall should use the projected area.

Liquefaction downdrag nominal unit side friction values provided for drilled shafts, below, may be used for the secant walls for preliminary design.

DRILLED SHAFTS

Compression

Shafts should be embedded at least one pile diameter into glacially overridden soils. For individual shafts we recommend using the ultimate unit end-bearing resistances in Table 2 of RFP Appendix G4.E.

1700 Westlake Avenue North, Suite 200
Seattle, Washington 98109-6212
Fax 206.328.5581
Tel 206.324.9530

Table 1, below, provides Strength and Service Limit resistances based on tolerable settlement of a six foot diameter drilled shaft (AASHTO LRFD 10.8.2.2.2). In Table 1, Holocene Soils are not considered for compression resistance.

Table 1. Unfactored Shaft Resistances in Glacially Overridden Soils

Soil Unit	Shaft Diameter (ft)	Tolerable Settlement (inch)	Ultimate End Bearing (Strength Limit) (ksf)	Ultimate Side Friction (Strength Limit) (ksf)	Service Limit State End Bearing Resistance (ksf)	Service Limit State Side Resistance (ksf)
Qpgt	6	1/2	100	3	20	2.9
Qpgo, Qpdgd, Qpgm	6	1/2	80	2.5	16	2.4
Qpgl, Qpnl	6	1/2	70	2	14	1.9
Qpgt	6	1	100	3	40	2.9
Qpgo, Qpdgd, Qpgm	6	1	80	2.5	32	2.4
Qpgl, Qpnl	6	1	70	2	28	1.9

Uplift

If drilled shafts are used as uplift resistance elements, a nominal skin friction of 5 kips per square foot (ksf) may be used for the glacially overridden sands and gravels (Qpgm and Qpgt) and 4 ksf for the glacially overridden silts and clays (Qpgl and Qpnl). These values should be multiplied by the perimeter area of the shaft to determine the nominal uplift resistance. AASHTO LRFD recommends that a resistance factor of 0.45 be used to determine the factored uplift resistance.

Downdrag

The extreme limit state will need to consider liquefaction downdrag in the Holocene soils following seismic shaking. The magnitude of downdrag is a function of shaft diameter, depth of Holocene soils above the glacial soils and residual strength of liquefied soils.

For preliminary design we recommend a nominal liquefaction downdrag be applied above the glacial soils. For the estuarine deposits (He), use a unit side friction 220 psf, for other granular, Holocene soils use a unit side friction of 100 psf. The unit side friction for downdrag should be multiplied by the pile circumference and the thickness of the soil deposit. The downdrag load is based on the residual strength of the liquefied soils. We recommend a load factor for downdrag (DD) of 1.0 for drilled shafts based on our review of the 2008 AASHTO LRFD Bridge Design Specifications.

As per Section 6.4.2.8 of the GDM, liquefaction-induced settlement and downdrag do not generally occur until the pore pressures induced by ground shaking decrease after shaking ceases; therefore, a decoupled analysis is appropriate when considering liquefaction downdrag loads. Additionally, Section 8.13.2.4 of the GDM details the analysis that should be completed for the portion of the Extreme Limit State that is to include downdrag loads.

Resistance Factors

Resistance factors for shaft design are provided in Table 2 according to the 2008 AASHTO LRFD Bridge Design Specifications and the GDM Sections 8.8 through 8.10.

Table 2 – Vertical Resistance Factors for Single Shaft Design

Limit State	Resistance Factor		
	Tip Resistance	Side Resistance	Uplift
Service	1.0	1.0	1.0
Strength	0.5	0.55	0.45
Extreme Event	1.0	1.0	0.8

Axial Shaft Group Effect

WSDOT recommends group reduction factors for the bearing resistance of shafts as reproduced in Table 3 (WSDOT Design Memorandum, June 28, 2010).

Table 3. Group Reduction Factors For Bearing Resistance of Shafts

Soil Type	Shaft Group Configuration	Shaft Center-to-Center Spacing	Special Conditions	Group Reduction Factor
Cohesionless (e.g. sands and gravels)	Single Row	2D		0.9
		3D or more		1.0
	Multiple rows	2.5D		0.67
		3D		0.80
		4D or more		1.0
	Single and multiple rows	2D or more	Shaft group cap in intimate contact with ground consisting of medium dense or denser soil	1.0
	Single and multiple rows	2D or more	Full depth casing is used and augering ahead of the casing is not allowed, or pressure grouting is used along the shaft sides to restore lateral stress losses caused by shaft installation, and the shaft tip is pressure grouted	1.0
Cohesive (Clays, clayey sands, and glacially overridden well graded soils such as **glacial till**)	Single or multiple rows	2D or more		1.0

USE OF THIS MEMO

This memo has been prepared for the exclusive use of HNTB and their design consultants for specific application to the subject project and site. This study has been performed in accordance with generally accepted geotechnical engineering practices in the same or similar localities, related to the nature of the work accomplished at the time the services are performed. No other warranty, express or implied, is made.

MEMORANDUM

DATE: August 12, 2010

TO: Gerald Dorn, PE; HNTB

FROM: Garry Horvitz, PE; Hart Crowser, Inc.

RE: **Preliminary Geotechnical Design Recommendations**
Earth Pressure
17638-00

This memorandum provides supplemental earth pressure information to be used for design of shoring walls.

Appendix G4.E of the RFP documents provides lateral pressure diagrams for preliminary design of structures. Lateral pressure diagrams are provided for temporary static, temporary seismic, permanent static, permanent seismic, and permanent post-earthquake cases. The temporary static lateral pressure diagrams use apparent active earth pressure diagrams. The permanent lateral pressure diagrams use an at-rest earth pressure condition.

The active earth condition presumes a minimum wall deflection of 0.001times the wall height while the at-rest condition assumes essentially no lateral movement of the wall. In locations where wall construction could cause movement of the viaduct foundations minimal wall deflection is desirable (either inward or outward wall movement). When designing shoring systems in close proximity to settlement sensitive structures, it is customary in Seattle to use an apparent earth pressure diagram using an at-rest earth pressure coefficient.

We understand that the structural calculation of wall movement makes use of lateral earth pressure diagrams as input and may not consider soil-structure interaction. Because earth pressure is a function of wall movement; at those locations where minimal wall deflection is desired, an at-rest earth pressure should be used.

The at-rest earth pressure condition may be considered in two ways. First, the permanent case earth pressure diagram can be used instead of the temporary case earth pressure diagram; second, the temporary case earth pressure diagram may be increased by a factor of 1.5 to approximate an apparent at-rest earth pressure. The latter is commonly used for braced shoring systems in Seattle.

1700 Westlake Avenue North, Suite 200
Seattle, Washington 98109-6212
Fax 206.328.5581
Tel 206.324.9530

Figure 1 provides a comparison of the temporary apparent active earth pressure calculated using Figure 27 of Appendix G4.E, the temporary apparent at-rest earth pressure, and the permanent, at-rest earth pressure calculated in accordance with Figure 30 of Appendix G4.E. The soil profile corresponds to Station 199+00.

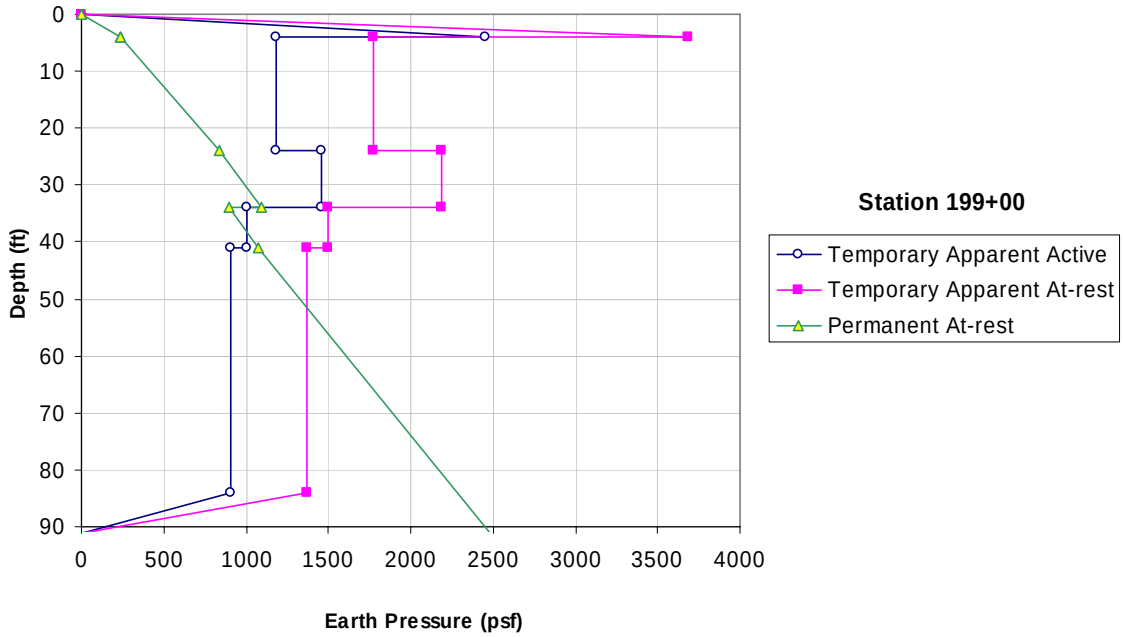

Figure 1. Comparison of temporary (active), factored temporary (at-rest), and permanent (at-rest) earth pressure diagrams for Station 199+00

Because the temporary case uses an apparent earth pressure diagram, the pressure near the top of the wall is very high, this is due to the tieback pushing the wall into the retained soil; by comparison, the permanent at-rest earth pressure is relatively low near the top of the wall. At the bottom of the wall, the permanent at-rest earth pressure is relatively high compared to the temporary earth pressures. We recommend performing comparative analyses using both the apparent at-rest and permanent at-rest earth pressures.

This memo has been prepared for the exclusive use of HNTB and their design consultants for specific application to the subject project and site. This study has been performed in accordance with generally accepted geotechnical engineering practices in the same or similar localities, related to the nature of the work accomplished at the time the services are performed. No other warranty, express or implied, is made.

DRAFT
Technical Memorandum
09-03-2010
Active Earth Pressure Determination

Brief Description: Active Earth Pressure Determination

Objective: Constructing active earth pressure diagrams from Appendix G4.E Figures

Existing Conditions: Na

Alternatives Evaluated: Na

Summary and Conclusions: Na

Created by: *Matt Veenstra, PE; Hart Crowser*
Date: *09-03-2010*
Reviewed by: *Garry Horvitz, PE; Hart Crowser*
Date: *09-03-2010*
Approved by:
(Dan Dixon or Rich Johnson)
Date:

An active earth pressure diagram may be constructed by dividing the equivalent fluid unit weight from an apparent earth pressure diagram by 0.65, multiplying the resulting equivalent fluid unit weight by the corresponding layer thickness, and then consecutively adding the earth pressures for each soil layer starting from top to bottom. Mobilization of active earth pressure requires deflection at the top of a wall on the order of 0.001 times the wall height.

Active earth pressure diagrams may be used where shoring deflection can be tolerated and where settlement sensitive structures will not be affected by ground deformations behind the shoring. Where deformations are deemed to be excessive and/or settlement sensitive structures are located within the zone of influence of ground deformations caused by the shoring system, an at-rest or “temporary at-rest” earth pressure condition should be considered. Reference Hart Crowser memorandum “Preliminary Geotechnical Design Recommendations, Earth Pressure” dated August 12, 2010.

DRAFT
Technical Memorandum
09-03-2010
Addendum: Drilled Shaft Uplift

Brief Description: Addendum to Hart Crowser Drilled Shaft Memorandum, of August 12, 2010.

Objective: Clarification of uplift and skin friction.

Existing Conditions: Na

Alternatives Evaluated: Na

Summary and Conclusions: Na

Created by: *Matt Veenstra, PE; Hart Crowser*
Date: *09-03-2010*
Reviewed by: *Garry Horvitz, PE; Hart Crowser*
Date: *09-03-2010*
Approved by:
(Dan Dixon or Rich Johnson)
Date:

On Page 3 of Hart Crowser memorandum "Axial Design of Drilled Shafts and Secant Pile Walls", replace the following text:

Uplift

If drilled shafts are used as uplift resistance elements, a nominal skin friction of 5 kips per square foot (ksf) may be used for the glacially overridden sands and gravels (Qpgm and Qpgt) and 4 ksf for the glacially overridden silts and clays (Qpgl and Qpnl). These values should be multiplied by the perimeter area of the shaft to determine the nominal uplift resistance. AASHTO LRFD recommends that a resistance factor of 0.45 be used to determine the factored uplift resistance.

with:

Uplift

If drilled shafts are used as uplift resistance elements, the values in Table 1 for Side Resistance should be used. These values should be multiplied by the perimeter area of the shaft to determine the nominal uplift resistance. AASHTO LRFD recommends that a resistance factor of 0.45 be used to determine the factored uplift resistance.

DRAFT
Technical Memorandum
09-03-2010
Addendum: LPILE Parameters

Brief Description: Addendum regarding LPILE parameters

Objective: Provides additional LPILE soil input values that includes all ESUs, based in part on Table 5 of Appendix G4.F.

Existing Conditions: Na

Alternatives Evaluated: Na

Summary and Conclusions: Na

Created by: *Matt Veenstra, PE; Hart Crowser*
Date: *09-03-2010*
Reviewed by: *Garry Horvitz, PE; Hart Crowser*
Date: *09-03-2010*
Approved by:
(Dan Dixon or Rich Johnson)
Date:

In Hart Crowser Memorandum "Preliminary Geotechnical Design Recommendations, P-Y Parametes for Lateral Pile Analysis", dated August 2, 2010. Replace "Table 1. Generalized LPILE Parameters – South Portal" with the following table:

TABLE 1. GENERALIZED LPILE PARAMETERS

Geologic Unit	ESU	P-Y Soil Type [2]	Total Unit Weight (pcf)	Friction Angle (deg)	E_{50}	m_p [1]	Su (psi)	P-Y Modulus (pci)
Hf – above water	1	Sand	120	34		1		90
Hf – below water	1	Sand	120	33		0.15		58
Hf – upper soft clay	1	Soft Clay - Matlock	116		0.015	1	4.17	
Hf – peat	Peat							
Ha – liquefiable	2	Sand	115	30		0.1		32
Hb, Hrw, Qvri, Qvro, Qvat	2	Sand	125	36		1		192
He	3	Sand	115	32 [24]		1		48 [5]
Hrw	3	Sand	125	33		1		58
Qpgt, Qpgm, Qpgd	4	Sand	145	40		1		192
Qpgo, Qpnf	5	Sand	130	39		1		192
Qpgl	6	Sand	125	39		1		192
Qpgol, Qpgm, Qpnl, Qpns, Qpnp, Pqnm	7 - Intact	Stiff Clay With Free Water	120	25	0.007	1	50	500
	7 – Residual	Sand	120	15		1		20
Qpgt, Qpgm, Qpgd	8	Sand	145	40		1		192

Note: Liquefied conditions included in [ ], otherwise same as static conditions.
[1] For liquefied conditions, the p-multiplier m_p should be applied during analyses.
[2] Reference: LPILE PLUS 5.0 Technical Manual

Draft
Technical Memorandum
09-03-2010
Addendum: Earth Anchor Adhesion and Resistance Factors

Brief Description: Addendum: Earth Anchor Adhesion and Resistance Factors

Objective: Clarification of adhesion and resistance factors

Existing Conditions: Na

Alternatives Evaluated: Na

Summary and Conclusions: Na

Created by: *Matt Veenstra, PE; Hart Crowser*
Date: *09-03-2010*
Reviewed by: *Garry Horvitz, PE; Hart Crowser*
Date: *09-03-2010*
Approved by:
(Dan Dixon or Rich Johnson)
Date:

Tieback adhesion may be estimated using the bond stresses presented on page 17 of RFP Appendix G4.E for both normally consolidated and glacially overridden deposits including coarse- and fine-grained soils. The values presented are ultimate bond *stresses* that assume single-stage pressure grouting. If these values are used, input from a specialty tieback contractor should be obtained to determine the area over which to apply the bond stress in order to calculate the bond adhesion.

For the 505 First Avenue S. Building, which is located adjacent to the proposed South Operations Building and the south cut-and-cover section, an ultimate bond adhesion of 10 kips per lineal foot was used. The anchors were bonded in glacially overridden till and pressure grouted. The glacially overridden till soils encountered at the 505 First Ave. S. Building likely represent the upper bound of anchor bond strength for the various glacial soils that will be encountered on this project.

The no-load zone shall include all soils within ESUs 1, 2 and 3. No bond resistance should be accounted for in the Holocene deposits.

Resistance factors (RF) for earth anchors should be determined from the AASHTO LRFD Bridge Design Specifications, Table 11.5.6-1 used in combination with Table 3.4.1-2. We recommend using an RF of 1.0 if proof tests are performed on all anchors. For preliminary design, we recommend using RFs of 0.65 for granular soils and 0.70 for cohesive soils.

This addendum modifies Hart Crowser memoranda:

- Preliminary Geotechnical Design Recommendations, Approach to South Portal Cut and Cover and U-Sections. July 16, 2010.
- Preliminary Geotechnical Design Recommendations, North Portal Structures. August 4, 2010.

SR99 Bored Tunnel

DRAFT
Technical Memorandum
09/28/2010
Passive Earth Pressure

Brief Description: Passive earth pressure coefficients for non-glacial soils.

Objective:

Existing Conditions:

Alternatives Evaluated:

Summary and Conclusions:

Created by: *Matt Veenstra, Hart Crowser, Inc.*
Date: *9-28-10*
Reviewed by: *Garry Horvitz, Hart Crowser, Inc.*
Date: *9-28-10*
Approved by:
(Dan Dixon or Rich Johnson) _____
Date: _____

Table 1 provides unfactored, ultimate values for non-glacial soils. Reference AASHTO LRFD Table C3.11.1-1 for the required relative movement to mobilize passive earth pressure conditions.

Table 1. Passive Earth Pressure – Coulomb Theory

Geologic Unit	ESU	Total Unit Weight (pcf)	Friction Angle (deg)	Wall friction[1]	Passive Earth Pressure Coefficient, Kp	Passive Equivalent Fluid Unit Weight (Above GWT / Below GWT)
Hf – above water	1	120	34	17	7	800 - Above GWT
Hf – below water	1	120	33	17	6	800 / 350
Hf – upper soft clay	1	116				
Hf – peat	Peat					
Ha – liquefiable	2	115	30	17	5	600 / 300
Hb, Hrw, Qvri, Qvro, Qvat	2	125	36	18	8	1000 / 500
He	3	115	32 [24]	17	6	700 / 300
Hrw	3	125	33	17	6	800 / 400

[1] Taken as one-half of the soil friction angle, but not less than 17 degrees.

SR99 Bored Tunnel

DRAFT
Addendum Technical Memorandum
10-6-2010
Shoring Movement – North and South Approaches

Brief Description: Addendum to Shoring Deformation Memo dated August 2, 2010.

Objective: Provide Shoring deformation recommendations to be used for drawing a contour plan of deformations.

Existing Conditions:

Alternatives Evaluated:

Summary and Conclusions:

Created by: *Matt Veenstra, Hart Crowser*
Date: *10-6-2010*
Reviewed by: *Garry Horvitz, Hart Crowser*
Date: *10-6-2010*
Approved by:
(Dan Dixon or Rich Johnson) _____
Date: _____

This memorandum supersedes the Shoring Deformation Memo dated August 2, 2010 by Hart Crowser.

The following recommendations can be used to create a drawing showing horizontal and vertical displacement contours caused by shoring deformations. The magnitude of lateral deflection may be taken as 0.6 inches in the South Approach Area and 0.5 inches in the North Approach Area based on shoring analysis performed by HNTB. The magnitude of vertical and lateral deflection of the soil behind the shoring walls may be taken as equal. The lateral and vertical deflections may be considered negligible at a distance behind the walls equal to twice the excavation depth in front of the walls; the following tables present recommended values for this distance.

South Approach – West Side of Excavation

Station	Excavation Depth (ft)	Max Lateral (inch)	Max Vertical (inch)	Distance (ft)
184+00	28	0.6	0.6	56
184+50	30	0.6	0.6	60
185+00	32	0.6	0.6	64
186+00	35	0.6	0.6	70
186+50	35	0.6	0.6	70
187+00	38	0.6	0.6	76
188+00	41	0.6	0.6	82
188+50	43	0.6	0.6	86
190+00	48	0.6	0.6	96
191+50	78	0.6	0.6	156
192+00	80	0.6	0.6	160
193+00	79	0.6	0.6	158
194+45	79	0.6	0.6	158

South Approach – East Side of Excavation

Station	Excavation Depth (ft)	Max Lateral (inch)	Max Vertical (inch)	Distance (ft)
184+00	28	0.6	0.5	56
184+50	30	0.6	0.5	60
185+00	32	0.6	0.6	64
186+00	35	0.6	0.6	70
186+50	35	0.6	0.6	70
187+00	38	0.6	0.6	76
188+00	41	0.6	0.6	82
188+50	43	0.6	0.6	86
190+00	45	0.6	0.6	90
191+50	78	0.6	0.6	156
192+00	80	0.6	0.6	160
193+00	79	0.6	0.6	158
194+45	79	0.6	0.6	158

North Approach – West Side of Excavation

Station	Excavation Depth (ft)	Max Lateral (inch)	Max Vertical (inch)	Distance (ft)
300+00	94	0.5	0.5	188
300+50	90	0.5	0.5	180
301+00	72	0.5	0.5	144
302+00	65	0.5	0.5	130
303+50	56	0.5	0.5	112
304+00	31	0.5	0.5	62
304+50	27	0.5	0.5	54

North Approach – East Side of Excavation

Station	Excavation Depth (ft)	Max Lateral (inch)	Max Vertical (inch)	Distance (ft)
301+00	73	0.5	0.5	146
302+00	69	0.5	0.5	138
303+50	59	0.5	0.5	118
304+00	70	0.5	0.5	140
304+50	51	0.5	0.5	102

DRAFT/
Technical Memorandum – ATC MMO Ref. #1
7/15/10
Constant Slope Roadway in Bored Tunnel

Brief Description: This technical memo discusses providing a constant cross slope on the roadway surface in the bored tunnel.

Objective: Simplify construction of tunnel interior structures, and improve safe egress along west shoulder.

Existing Conditions and Technical Requirements: The bored tunnel alignment is "S" shaped with two horizontal curves. Current requirements require the cross slope on the upper and lower roadways to transition from sloping do towards the east to sloping down to the west in the southern curve. This makes the concrete inter structures more complex and more expensive to build.

The southern horizontal curve in the bored tunnel has a 6,000 foot radius which is less than the minimum 8,315 foot radius allowed with a normal crown. The WSDOT standard for the minimum radius horizontal curve with a normal crown section will be deviated on this curve.
The northern horizontal curve has a 6,113 foot radius which is also less than the minimum 8,315 foot radius allowed for a normal crown section. This curve is not a deviation since the 2% single cross slope meets the WSDOT superelevation requirements.

Alternatives Evaluated: ***Build to Full Design Level, Standard Superelevation:*** This alternative would rotate the roadway surface to the full 2% superelevation, sloping down toward the west shoulder, within the length of the southern curve. The roadway surface will transition to the normal crown section, sloping down toward the east shoulder on the tangent. The roadway surface will not need to rotate to a superelevation on the northern curve, since the 2% cross slope meets the WSDOT superelevation requirements.

The advantages of this alternative are that a deviation or design exception to WSDOT Standards would not be required, and the cross slope meets the WSDOT Design Manual requirements.

One disadvantage of this alternative is that emergency egress may be impeded. In the bored tunnel, pedestrians make their way to the exit along the west shoulder. In the south half of the tunnel, where the roadway surface slopes downward toward the west shoulder, any hazardous fluids, burning fuel, or rolling objects would flow or roll toward the exiting pedestrians. This configuration results in the sag low point of the tunnel profile on the west egress shoulder, during an event or accident debris and fluids would accumulate on the west egress shoulder. This may impact or impede their escape.
Another disadvantage is that the varying cross slope makes construction of the interior tunnel structure more complex and slower. This may lengthen the construction time and increase construction costs.

Constant slope Alternative - Provide a roadway surface with a constant slope, for the whole length of the tunnel: This alternative would provide a roadway surface that slopes down at 2%, with the high side on the west, for the entire length of the tunnel.

The advantages of this alternative are that pedestrians exiting the tunnel on the west shoulder would be on the high side of the roadway for the entire length of the tunnel. Any hazardous fluids, burning fuel, or rolling objects would tend to flow

or roll away towards the east shoulder, away from the pedestrian egress on the west shoulder.

Another advantage of this alternate is that the constant cross slope simplifies the construction of the interior tunnel structure. A consistent tunnel and roadway configuration will provide a systematic approach to the design and placement of the walls, utilities and interior systems. This may shorten the total construction time, and reduce overall construction costs.

The disadvantage of this alternative is that, it does not meet the WSDOT Design Manual requirements. WSDOT Approval of an ATC and a deviation would be required. A draft deviation has been prepared. Approval of this ATC and the associated deviation is likely since

- There are numerous state highways with normal crown sections and adverse super elevations,
- The proposed modification meets AASHTO standards, so federal Approval is not required
- The constant slope roadway represents and improvement in emergency safety.

Summary and Conclusions: It is recommended that an ATC to provide a constant cross slope on the roadways, with the high side on the west, be prepared and submitted to WSDOT.

Created by:	*Laura Smith*
Date:	*7/15/10*
Reviewed by:	*Mike Coward*
Date:	*7/22/10*
Approved by:	
(Dan Dixon or Rich Johnson)	*Rich Johnson*
Date:	*7/27/10*

DRAFT
Technical Memorandum
Date: 7-19-10
Structural Fire Resistance – Project Approach

Brief Description: The purpose of technical memo is consolidated the requirements for structural fire resistance and evaluate potential methods to meet the requirements.

Objective: Determine how the fire resistance requirement will be met so they dimensional requirements can be incorporated into the size of the bored tunnel.

Existing Conditions:

1. The Project Fire Code is identified in 2.1.
2. Section 2.13.3.4 requires the surface of the concrete must be maintained at less than 716 degrees F during time temperature curve of Section 7.3.2 of NFPA 502. This time and temperature curve is often referred to as the RWS curve because of its origin from Dutch ministry of Transport (Rijkswaterstaat).
3. Section 2.30.3.3 requires the DB to develop a Structural Fire Durability Report (in post-award phase).
4. Section 2.33.3.2 requires the use of a code compliant fire-rated protection board or an equivalent code compliant assembly.
5. Section 2.35 addresses the tunnel ventilation system. The tunnel ventilation system requirements are independent of the structural fire resistance requirements.
6. FHWA Roadway Tunnel Manuel, Section 10.4.2 identifies use of polypropylene fibers that melt at high temperature to allow escape of moisture vapor and reduce the potential for spalling and states the protection in the form of coatings or boarding is available commercially.
7. Section 5.14.9 of the ITA Guidelines for Structural Fire Resistance for Road Tunnels identifies the most fundamental methods for protecting concrete against fire as:
    - Upgrading fire resistance of concrete itself
    - Application of a coating that delays heat transfer to concrete surface
    - Secondary lining
    - Installation of fire protection materials
8. Promat fire protection board literature indicates that 1.1 inch of Promat-H will meet the requirements of the project.
9. Because of the extensive area that need to be protected, use of sprinklers to meets the requirements is not practical and may not be possible.
10. The use of sacrificial concrete and shotcrete would increase the

diameter of the tunnel more than Promat.

11. Excerpts from citation appended to end of this memo.

Summary and Conclusions:

a. Ask Promat to validate they meet the requirements of the project (RMJ).
b. Identify alternate products to Promat (Sean Cassady)
c. Use 1.2 inch of thickness for structural fire project for those areas requiring fire protection.
d. The requirements for structural fire resistance and the ventilation requirements are separate and distinct from each other. Operation of ventilation system will reduce air temperatures at surface of structural components however it cannot be incorporated into fire resistance design.
e. The requirements for structural fire resistance and the fire suppression system requirements are separate and distinct from each other. Operation of fire suppression system will reduce air temperatures at surface of structural components however it cannot be incorporated into fire resistance design.

Created by:	*Rich Johnson*
Date:	*7-18-10*
Reviewed by:	*Sean Cassady*
Date:	*7-19-10*
Approved by:	
(Dan Dixon or Rich Johnson)	*Rich Johnson*
Date:	*7-19-10*

Technical Requirement Excerpts

2.1 General Information

2.1.1.2 Definitions

Project Fire Code (PFC) – The fire code to be used for the Project is composed of
(a) International Fire Code (IFC) as amended by City of Seattle, and
(b) National Fire Protection Association (NFPA), NFPA 502, Standard for Road Tunnels, Bridges and Other Limited Access Highways, 2008 as amended per Appendix Z.

2.13 Interior Tunnel Structure and Other Structures

2.13.3.4 Structural Fire Resistance

Tunnel design shall comply with fire safety requirements. The Design-Builder shall prepare a Structural Fire Durability Report for all underground structures. This report shall demonstrate through calculations and testing that the structural fire resistance requirements specified herein are met with the proposed system.

The roadway tunnel structure shall be designed to prevent failure in accordance with the Project Fire Code the guidelines set forth by the International Tunnel Association (ITA) document titled “Guidelines for Structural Fire Resistance for Road Tunnels”, and as specified herein. If a conflict exists between these requirements, WSDOT will determine which requirement controls. The primary interior tunnel structure elements shall include the following as a minimum: roadway decks, tunnel roof slabs, tunnel walls, tunnel structure supports and emergency egress. As defined within these guidelines, the interior tunnel structure

shall be classified as a Category 2 road tunnel in unstable ground in accordance with ITA and category D in accordance with the Project Fire Code. The entire tunnel structure, inclusive of the emergency exit passageway enclosures, shall be designed to prevent structural failure and progressive collapse when subjected to the temperature rise associated with hydrocarbon fire over a period of two hours as defined by the time temperature curves prescribed by NFPA 502, Section 7.3.2.
The concrete or masonry structures shall also meet the following requirements:

- No life-safety failures when subjected to the design fire in accordance with NFPA 502, Section 7.3.2.
- Concrete surface temperatures of concrete members shall be less than 380 degrees C (716 degrees F) over a period of two hours in accordance with the time temperature curve per NFPA 502, Section 7.3.2.
- Mild reinforcement temperatures of concrete members during the design fire shall remain less than 250 degrees C (482 degrees F) over a period of two hours in accordance with the time-temperature curve per NFPA 502, Section 7.3.2.
- Pre-stressing reinforcement temperatures of concrete members shall remain less than 200 degrees C (392 degrees F) over a period of two hours in accordance with the time-temperature curve per NFPA 502, Section 7.3.2.

2.30 U-Section Structures
2.30.3.3 U-Section Structure Fire Safety Requirements
U-Section structure design shall comply with the fire safety requirements of the Project Fire Code. The Design-Builder shall include in the Structural Fire Durability Report proof that the requirements of the Project Fire Code have been met.

2.31 Cut-and-Cover Tunnels
2.31.3.4 Structural Fire Resistance
Tunnel design shall comply with fire safety requirements. The Design-Builder shall prepare a Structural Fire Durability Report for all underground structures. This report shall demonstrate through calculations and testing that the structural fire resistance requirements specified herein are met with the proposed system.

The roadway tunnel structure shall be designed to prevent failure in accordance with the Project Fire Code and the guidelines set forth by the International Tunnel Association (ITA) document titled "Guidelines for Structural Fire Resistance for Road Tunnels", and as specified herein. If a conflict exists between these requirements, WSDOT will determine which requirement controls. The primary tunnel structure elements shall include the following as a minimum: roadway decks, tunnel roof slabs, tunnel walls and tunnel structure supports and emergency egress. As defined within these guidelines, the Cut-and-Cover Tunnel shall be classified as a Category 2 road tunnel in unstable ground in tunnel structure, inclusive of the emergency exit passageway enclosures, shall be designed to prevent structural failure and progressive collapse when subjected to the temperature rise associated with hydrocarbon fire over a period of two hours as defined by the time temperature curves prescribed by NFPA 502, Section 7.3.2.
The concrete or masonry structures shall also meet the following requirements:

- No life-safety failures when subjected to the design fire in accordance with NFPA 502, Section 7.3.2.
- Concrete surface temperatures of concrete members shall be less than 380 10 degrees C (716 degrees F) over a period of two hours in accordance with the time-temperature curve per NFPA 502, Section 7.3.2.
- Mild reinforcement temperatures of concrete members during the design fire shall remain less than 250 degrees C (482 degrees F) over a period of two hours in accordance with the time-temperature curve per NFPA 502, Section 7.3.2.
- Pre-stressing reinforcement temperatures of concrete members shall remain less than 200 degrees C (392 degrees F) over a period of two hours in accordance with the time-temperature curve per NFPA 502, Section 7.3.2.

2.32 Bored Tunnel Engineering
2.32.3.3 Structural Fire Resistance of Tunnel
Tunnel design shall comply with fire safety requirements; see Section TR 2.31.3.4 (any reference in this Section to U-Section structures and Cut-and-Cover structures shall also equally apply to the Bored Tunnel).

2.33 Tunnel Architectural Systems
2.33.3.2 Tunnel Fire Protection Material
The Design-Builder shall refer to the temperature and duration requirements outlined in TR Section 2.13.3.4 "Structural Fire Resistance". Code compliant fire-rated protection board or an equivalent code compliant protective assembly shall be installed in areas of the tunnel interior if and as dictated by code requirements as they pertain to the projected design temperatures. Fire-rated protection board and other protective materials shall meet the requirements of TR Sections 2.33.3.3.1 through 2.33.3.3.4 (Safety, Ease of Maintenance, Durability and Aesthetic). If it is determined that protection board or equivalent fire-rated assembly is required on tunnel wall or ceiling surfaces elsewhere directed to have painted surface coatings, coating system must either be coordinated with fire-rated assembly to insure acceptable adhesion and longevity with no degradation to fire rating of final assembly or an equivalent compatible surface finish must be included.

Detailing and assembly of fire-resistant materials within the tunnel shall be such that final installation is adapted to and resists potentially destructive environmental conditions, such as moisture infiltration and freeze/thaw cycles, which might reasonably be expected within the tunnel interior. Detailing and installation shall be coordinated with the requirements of TR Section 2.39 for protection of electrical items.

2.35 Tunnel Ventilation System
2.35.4 Design Requirements
3. Design Fire Properties – The TVS shall be designed to control the effects of smoke and heat generated by a design fire to facilitate the safe evacuation of people and fire fighting operations. The design fire properties shall be:
a. Maximum FHRR will be 341 MBtu/hr (100 MW). This corresponds to a13 Heavy Goods Truck according to the Project Fire Code [1] and assumes the activation of the deluge fixed fire fighting system. This HRR assumes that 0.3 gpm/sq.ft of water deluge is applied directly to the fire location.
b. The Fire Growth Rate for transient simulations will be "ultra-fast" as defined 17 by NFPA 92B.
c. The Fire Smoke Properties will be based on the following parameters:
(1) The combustion composition will have product yield rates of:
a. Ys=0.179 (grams soot / gram fuel)
b. Yco=0.141 (grams CO / gram fuel)
(2) The mass specific extinction coefficient (σs) will be 8.7 meter2/gram
(3) The mass fuel rate will be determined using a chemical heat of combustion of 6,493 Btu/lbm (15.1 kJoule/gram) of fuel
(4) The air/fuel ratio will be 14.3

2.38 Tunnel Fire Suppression System
2.38.4.2.3 Fixed Water-Based Fire-Fighting System
2.38.4.2.3.1 Roadway
Requires
Traditional deluge sprinkler system that discharges water though a number of open nozzles simultaneously over a defined coverage area.
Deluge sprinkler system extending from portal to portal for northbound and southbound traffic lanes.

FHWA Roadway Tunnel Manuel

10.2.3 Durability
Protection from fire can be gained from concrete cover, tunnel finishes and the inclusion of plastic fibers in concrete mixes (to allow dispersion of water vapor and mitigate the potential for spalling).
High density concrete has low heat conductivity which is beneficial in a fire.

10.4.2 Design Considerations
The lining should be protected against fire. Both external and internal protection can be provided. External protection in the form of coatings or boarding is available commercially. These are specialty products that can provide a measure of protection against relatively low temperature fires. Manufactures should be consulted to ascertain the exact level of protection that can be provided. Including polypropylene fibers in the concrete mix can reduce the vaporization of entrapped water. The fibers melt during a fire and provide a pathway for water to escape.

ITA Guidelines for Structural Fire Resistance for Road Tunnels

1.1 Scope

This guideline is for informational purposes only and applicable codes, standards and local regulations must be consulted for compliance to specific structural and life safety requirements of the locale in which the structure is located.

2.2.1 PIARC Recommendation
Spalling of the structure can occur in the early stages of a fire but no incidents have been reported where it has had major consequences for firemen, although it may indicate a rapid deterioration of the structure. The main concern at the time of fire service intervention would be the collapse of items, such as jet fans, signs or lights from the tunnel ceiling or walls. This question of fire resistance has been addressed in the PIARC 19999 report [2.1], which states:
"In all cases, the minimum requirement is that heavy equipment should not fall down when evacuating users or rescue personnel are in the tunnel. This means no heavy item must fall under exposure to temperatures of 400-450°C during the time necessary to fight fire (in a tunnel, such temperatures can produce a radiation level of about 5 kW/m2, which is the maximum tolerable value for firemen)."

3. Lining Material Behavior

By means of fire protection the heating can be reduced. The types of fire protections vary from organic to inorganic materials, sprayed-on material and boards. Fire isolating paint also exists but is not normal to use in tunnels. The common products are:
• Fiber / cement
• Vermiculite /cement
• Mineral wool slabs
• Ceramics
• Calcium Silicate Aluminate boards
• Composite panels
Reference is made to special studies and product information in section 5.[Glarum, Barry]. Fire protection materials are discussed in section 5.14.9.

5.14.9 Protection of Structural Elements
The following are the most fundamental methods for protecting concrete against fire.
• Upgrading fire resistance of concrete itself
• Application of a coating that delays heat transfer to concrete surface
• Secondary lining
• Installation of fire protection materials

DRAFT
Design Evaluation
July 29, 2010
Revise Power One - Line

Brief Description: Revise power one-line to minimize number of medium voltage transformers and double ended substations.

Objective: The purpose of this memo is to evaluate alternatives for the one-line and the power system equipment shown in the conceptual plans. The system under evaluation provides the primary power for the project. There is a utility connection at each ventilation building. The one-line shows how the two utility sources are interconnected to provide power for the two ventilation buildings and the tunnel. The Objective of the evaluation is to identify a system that will create a more efficient and effective power system. This information is included in the reference document therefore revisions to this system will not require an ATC.

Existing Conditions: The existing one-line has 8 medium voltage transformers and four double ended substations in each vent building. Each vent building draws power from two utility sources. The double ended substations are each connected to the two utility sources. The one-line diagram for the conceptual design is shown on sheet 176 and 177 of 251, EL001 and EL002.

Alternatives Evaluated: Both of the alternatives being evaluated meet the contract requirements and the code requirements.

Alternative 1: The first alternative evaluated is the one shown in Appendix mc of the RFP documents. . The advantage of this alternative is that it separates the power source for the tunnel ventilation systems from the other loads. The advantage of this system is that by dividing the load between double ended substations, the load on individual transformers is smaller.

The disadvantages of this alternative are:

- Complex configuration increases construction cost
- Long lead time for large number of 26kv transformers
- Increased maintenance cost
- Inefficient use of power capacity
- High floor space requirements
- High heating requirements for 8 transformers
- Inefficient design - Three of the double ended substations are lightly loaded with all loads other than tunnel ventilation fans carried on a single double ended substation.

Alternative 2: The second alternative provides two transformers at each building, which are fed by each of the two power sources. Each transformer will provide power to one end of a single main bus in a double ended substation. The two sources are connected by a tie breaker so that if either source is lost, the entire load can be picked up by the remaining source. The advantages of this alternative are:

- More efficient electrical design- multiple double ended substations will

require each to have added spare capacity, require multiple metering and relay equipment, and multiple locations for monitoring power quality and availability. The alternative design minimizes this duplication.

- Reduced construction cost – Reduction from 16 26kv transformers to 4 and reduction from 8 double ended substations to 2 will lead to reduced costs for equipment, installation and associated wire and cable.
- Reduced foot print – Each 26KV transformer requires 6' minimum clearances around the equipment. Each double ended substation requires 4' clearance on all sides.
- Reduce room size – Reduced equipment footprint will combine to require smaller rooms in each building
- Reduced maintenance costs – There will be substantially less equipment to maintain.
- Reduced heat load in equipment rooms – Transformers provide a high heat load, fewer transformers will lead to lower heat loads

The disadvantage to this system is that larger transformers are required.

Summary and Conclusions: An alternative one-line power configuration (Alternative 2) was evaluated against the configuration shown in the final RFP reference plans(Alternative 1). The alternative configuration is recommended due to the advantages stated above. The capital cost is expected to be substantially lower for the recommended alternative. An ATC will not be required.

Created by:	*Patty Fordyce*
Date:	*7/14/2010*
Reviewed by:	*Laura Smith*
Date:	*7/22/2010*
Approved by:	
(Dan Dixon or Rich Johnson)	
Date:	

Final
Technical Memorandum
7/30/10
Muck Disposal

Brief Description: Discussion of constrains and options for disposal of excavated materials.

Objective: Discussion of the opportunities and challenges associated with disposal of the excavation material (muck) that will be removed during construction of the SR 99 Tunnel Project.

Tunnel Overview: The SR 99 Project will consist of an 8,800 foot long, approximately 57.5 foot diameter bored tunnel, with a cut and cover and an open U section on the south end, and a cut and cover section on the north end.

Bored Tunnel

It is anticipated that approximately 846,000 cubic yards of material will be excavated from the bored tunnel using an Earth Pressure Balance (EPB) machine. The EPB machine will use conditioners to modify the soils at the face of the TBM. The conditioners will be made with organic polymers to limit land fill restrictions on oil based polymers. It is likely that the polymers, disposal sites, handling management plan, and other details associated with muck disposal will follow closely the muck disposal procedures of the Brightwater Project.

The EPB TBM may grout sand lenses and voids encountered in front of the machine. Grouting at the face of the TBM could lead to high pH muck, but the volume of this material may be so little that dilution with other soil being disposed of will not lead to a need for pH treatment or disposal at a special landfill.

North and South Portals

It is anticipated that approximately 540,000 cubic yards of material will be excavated from the north and south portals. Initial excavations at the north and south portals will likely encounter petroleum contaminated wastes, and creosote contaminated wood debris. In addition the slurry walls and secant walls could cause high pH muck.

Recent Similar Projects

Brightwater Project

An EPM TBM was used on portions of the Brightwater project near Seattle. The organic and biodegradable polymers used on this project made disposal much easier than if oil based polymers had been used. In the case of Brightwater, up to 25% of the native soil was found to be above 8.5 pH. Due to the jurisdiction of the project, this soil had to be dosed with acid prior to land fill acceptance. Muck from the Brightwater Project was barged to a CalPortland facility in Port Ludlow, which is in an exhausted quarry.

Brightwater had some high clay soils that just would not give up their water through decanting. Other soils did dry out easier. Barges had to have side walls to contain the soils with a high water content since these soils tend to lay flat. The soil was barged out and charged for transportation (barge) by weight. However, the soil was accepted and charged by volume at the landfill site.

Viaduct Electrical Lines Replacement Project

On the Viaduct Electrical Lines Replacement project (near the South Portal area) all the excavated fill soils were handled and disposed of as impacted soils at the direction of WSDOT. They were taken to waste management transfer station which is a short 5-10 minute trip from the project site. There were no special handling or transport requirements, no chain of custody, etc. The tipping fee was $38.50

Beacon Hill Tunnel, others

Grouting was used on the Beacon Hill Tunnel, and other projects. Grouting can lead to cementitious soil contamination which can lead to a high pH condition.

Some native soils can also be found that are naturally high in pH. It has been successfully argued that naturally occurring high pH soils can be accepted at landfill sites without further treatment.

Transportation of Muck

Removal from the Tunnel Excavation

The muck will be transported out of the tunnel on a conveyor system. Once it is out of the tunnel it may be placed in a sorting area. The sorting area will be a large (Need an Area SF) portion of the project construction site if it is used to segregate the contaminated and non contaminated soil, to store wet soil for possible decanting, to store soil while transportation is being arranged (barge traffic can be delayed by tides and weather), and for treating soil as necessary to meet local regulations and land fill requirements.

Transportation to the Disposal Site

The muck may be transported to the disposal site using barges, rail cars or trucks. Barging may be most efficient if the project can load directly onto and off a barge, similar to what was accomplished at Brightwater. Rail removal of muck is another possibility. There are locations in Eastern Washington (Kalamack) that may be able to accept the muck for little fee. Barged muck could be taken to a CalPortland owned site at Port Ludlow.

Disposal of the petroleum contaminated wastes, and creosote contaminated wood debris

Initial excavations at the north and south portals will likely encounter petroleum contaminated wastes, and creosote contaminated wood debris. There is a commercial Waste Management Transfer station just to the south of the south portal that could accept this contaminated waste at a cost of $50 to $60 per ton. The contaminated soil will need to be trucked off site.

Disposal of dry cleaner spills

At the north portal there are some soils impacted by dry cleaner spills and these will need to be handled as dangerous waste. The Washington State Department of Ecology (DOE) regulations will control the storage, disposal and chain of custody records maintained for this waste. This could cost $200-250 ton. If the soil in these areas can be further tested and analyzed prior to excavation, the soil could be hauled and disposed of as “contained out” soils, with agreement from DOE. This would mean that the cost of this soil disposal could be in the $60 per ton range. This waste will still need to be loaded directly into covered containers and taken to Waste Management but Waste Management will provide the containers.

Ecological Restrictions

The DOE controls offsite disposal of Muck from the tunnel. A National Pollutant Discharge Elimination System (NPDES) Permit will be issued by the DOE to control both the muck and water needing to be disposed of as part of the tunneling operations. Each landfill will also have criteria for disposal of the muck based on its properties. (These parameters include pH, and possibly other parameters depending on the type of process used by the TBM, the type of EPB related polymers or other types of waste). It may be possible to avoid having to get an NPDES permit if a combined sewer outfall (CSO) permit can be secured from the City/County that could accept all of the project’s waste water. This is unlikely given the potentially large volume of water needed for a EBP machine.

Any liquid based waste with a pH above 12.5 is considered “dangerous” waste by the DOE and requires special handling processes. There are landfills around that can manage this high pH waste, but it would be expensive.

Any waste that is a soil/water mixture with a pH above 2.5 and below 12.5 is considered inert can be managed as solid waste and billed by the ton.

There are a dozen to two dozen possible disposal sites located within 50 miles of the project site. However as of July 12, 2010 WSDOT has not identified any that

are within easy barge access and near Elliot Bay.

Alternatives Evaluated:

Material from the Bored Tunnel

The material excavated from the bored tunnel is anticipated to have a pH measured between 4.3 and 9.8 standard units (SU). The excavated material will primarily consist of natural soil (no contaminants or additives) with a pH between 6.5 and 8.5 SU which can be disposed of at any fill site. If the pH is below 6.5 or above 8.5 SU it may be able to be disposed of at an individually permitted fill site with prior consent from the facility operator and the facility permitting agency. These types of facilities typically include mine closure or regrade sites. Table 1 of the EBR indicates about 25 percent of the muck from the bored tunnel will require disposal as a Class 2 waste. Disposal costs are higher for Class 2 waste than for inert waste.

Material from the South Portal Area

The south portal area will extend from south Royal Brougham Way to S. King Street (Station 178+00 TO 200+00)

The surficial fill soils extending 20 to 35 feet or more below the surface are likely to require special disposal. They may contain petroleum contaminated soil, fill debris, wood waste (likely creosote impacted), and perchloroethylene (PAH). Soil with these contaminants, in concentrations exceeding the MTCA Method A cleanup levels, will require disposal at a Subtitle D landfill or treatment facility. A partial list of Subtitle D landfill or treatment facilities includes the following:

Waste Management - landfill
Allied Waste - landfill
LaFarge – thermal treatment
Cemex – landfill and thermal treatment

Soil with these contaminants in concentrations below MTCA Method A cleanup levels, but with detectible levels of these constituents, may still require disposal at a Subtitle D landfill or at a facility such as Cemex's facility in Everett, Wa., as it likely that these soils would not be acceptable for disposal at a clean fill site.

Material from the North Portal Area

The north to Broad Street (station 300+00 to 313+00) A portion of the spoils at the North Portal are portal area extends from Thomas Street contaminated with Volatile organic compounds (VOCs) related to dry cleaning operations, (located between stations 300+00 and 304+00) and PCE concentrations in the soil which may be as high as 13,000 mg/kg.

The VOC concentrations indicate that some of this soil may be required to be disposed of as dangerous waste or in a DOE designated "contained-in" site. Disposal in a "contained-in" site may require additional investigation and negotiations with the DOE.

Summary and Conclusions:

Construction of the cut and cover tunnel and the bored tunnel will generate excavated materials, TBM muck and waste water. The disposal of these materials will be controlled by a National Pollutant Discharge Elimination System (NPDES) Permit issued by the Washington State Department of Ecology. Muck from the bored tunnel may need to be stored on site prior to disposal at a fill site unless it is tested and deemed to qualify for disposal as it is removed from the tunnel. Approximately 75% of the TBM muck may be disposed at an individually permitted fill site. Each landfill will also have criteria for disposal of the muck based on the properties of the muck.

Material from the north and south portal areas will need to be tested and may be contaminated. DOE chain of custody regulations will apply to this contaminated

material will need to be disposed at a Washington State Department of Ecology designated “contained-in” site.

Created by:	Laura Smith
Date:	7/23/10
Reviewed by:	William Jordan
Date:	7/27/10
Approved by:	
(Dan Dixon or Rich Johnson)	Rich Johnson
Date:	7/29/10

MEMORANDUM

DATE: August 4, 2010

TO: **Gerald Dorn, PE, HNTB**

FROM: Garry Horvitz, PE, Matt Veenstra, PE

RE: **Preliminary Geotechnical Design Recommendations**
North Portal Structures
SR-99 Bored Tunnel
17638-00

CC: Michael J. Bailey, PE; Michael Coward, PE, HNTB; Rich Johnson, PE, HNTB

This memo summarizes preliminary design recommendations for the north portal, and addresses shoring, seismic liquefaction, and foundations.

1. SUBSURFACE CONDITIONS

Generalized soil profiles for the north portal area are presented in RFP Appendix G4.E, Figures 14 through 20, and are briefly summarized below.

Southbound Roadway, Center Alignment. The southbound structure ends at the tunnel entrance at station 300+00. The Southbound roadway is immediately underlain by Engineering Soil Unit (ESU) 8 from about station 300+00 to 303+00, then ESU 3 to about station 308+90. From about station 306+00 to 308+00 a 2- to 4-foot thick layer of peat and wood underlies the structure.

Northbound Roadway, Center Alignment. The northbound structure begins at the tunnel exit at about Station 300+00. The northbound roadway is immediately underlain by ESU 4 from about station 300+00 to 304+60, then ESU 2 to about station 305+20, then ESU 3 to about station 307+60, then ESU 2 to about station 308+90. The thickness of ESU 3 below the structure between stations 305+20 and 307+60 varies from near zero at the edges to about 13 feet at station 306+00.

The thickness of ESU 3 beneath the proposed roadway structures is as much as 30 feet in the vicinity of station 306+00 (see Figure 19, RFP Appendix G4.E).

1700 Westlake Avenue North, Suite 200
Seattle, Washington 98109-6212
Fax 206.328.5581
Tel 206.324.9530

2. GROUNDWATER

Explorations in the north portal area indicate that the regional groundwater table is about elevation +30 feet; perched groundwater as high as elevation +70 feet was also encountered.

Groundwater is typically below the north portal road structures though some areas near the tunnel may be below the groundwater table. The reference documents suggest that almost full-height hydrostatic pressures be used in the design of the cut-and-cover section. This approach would appear to be out of context with respect to typical design and construction methodology for deep excavations in this part of Seattle, as will be discussed further.

3. SHORING RECOMMENDATIONS

Lateral Earth Pressure
Lateral earth pressure diagrams for preliminary excavation shoring design are presented in RFP Appendix G4.E, Interim Letter CT-5, Figures 33 through 50 and 51. For final design, these preliminary values will need to be refined but appear to be reasonable for cost estimating purposes at this time.

No-Load Zone
The no-load zone for tieback anchors should be offset a distance of H/4 from the back of the wall and angled upwards at 60 degrees from horizontal. H is the height of the wall above the base of the excavation. The bottom of the no-load zone is located at the base of the excavation. The no-load zone should not include any soil within ESUs 1, 2 and 3; all anchors should derive 100 percent of their grout-to-ground capacity from the underlying glacially overconsolidated soils.

Anchor Declination
We anticipate typical anchor declinations of about 30 to 40 degrees down from horizontal. Normally, tieback anchors in this area are installed at angles of 20 to 30 degrees. Steeper angles may be necessary at some locations because of the depth to the glacially consolidated soils that will need to be used for the bond zone.

Bond Adhesion
We do not recommend setting anchor bond zones in non-glacial soils (ESUs 1, 2, and 3) because of the risk of unacceptable long-term creep. We do recommend setting anchor bond zones in ESU 5 (very dense, cohesionless sand and gravel), ESU 7 (very stiff to hard cohesive clay and silt), and ESUs 4 and 8 (glacial till and till-like deposits).

Based on local practice and our experience with the shoring at the 505 First Avenue Building, we recommend a preliminary unfactored adhesion of 5 kips per lineal foot (klf) for anchor bonds set in very dense glacial soils. This assumes that all tieback anchors would be pressure grouted.

If the CJV design requires adhesion greater than 5 klf, we recommend discussion with a shoring specialty contractor with experience in the Seattle area. Alternatively, the adhesion values presented on page 17 of Appendix G4.E can be used for estimating adhesion values.

4. SEISMIC LIQUEFACTION

Seismic liquefaction was evaluated for the 108- and 1,000-year events for the ESU 2 (Recent Granular Deposits) and ESU 3 (Recent Clay and Silt) soils. These soils are subject to strength loss and settlement due to seismic shaking. Our preliminary estimate of vertical ground settlement is 0 to 1 feet. Most settlement will occur in ESU 3 in the vicinity of station 306+00. This area is outside (i.e., north of) the limits of the contract. Within the contract area, only a very small portion at the north end is within these softer, more liquefaction-prone soils. Where liquefaction-prone soils are encountered, they are above the static water table. Therefore, we expect that only isolated pockets of loose material within limited zones of perched groundwater may lose strength and liquefy. The glacial soils (ESU 4 and higher) are generally not susceptible to liquefaction.

5. FOUNDATION CONSIDERATIONS

Axial Capacity of Wall Systems
Preliminary design values for vertical soil resistance of wall systems can be determined from Table 2 of RFP Appendix G4.E, Interim Letter CT-5.

Secant or slurry pile walls must have sufficient vertical and lateral resistance to resist vertical and horizontal tieback forces and soil and groundwater lateral pressures. Where possible, we recommend that continuous portions of the wall and soldier piles are embedded a minimum of 10 feet in glacially overridden deposits. Where glacially overridden deposits are very deep, shoring should be founded a minimum of 10 feet below the excavation bottom. In very soft soils, such as ESU 3, shoring elements may need to extend more than 10 feet below the base of the excavation to achieve bearing capacity, resist kickout, and maintain tolerable settlement.

Shallow Foundations
We recommend that shallow foundations bear in either glacially overconsolidated or improved soils. Recommendations for allowable bearing pressure and settlement are outlined below. From

the profiles shown in Appendix G4.E (see Generalized Subsurface Profile D-D, North Area, West Side, Figure 15) it appears that a short segment at the extreme north end of the alignment will be founded within the recent deposits (ESU 2 and 3), and may require the use of lower bearing pressures, overexcavation and replacement and/or some form of ground improvement. Boring TB-301 shows suitable bearing soils for shallow foundations at the foundation elevation. North of that boring, at the location of Boring TB-328, very loose materials were encountered that could require the use of deep foundations. The end of the cut-and-cover tunnel is between these two borings so it is not possible to say with any certainty where the favorable conditions end and unfavorable conditions begin.

- *Glacially Overconsolidated Soils*

Allowable bearing pressures for continuous wall and spread footings bearing on glacially overridden soils (ESUs 5, 7 and 8) typically vary from about 8 to 12 kips per square foot (ksf) in the Seattle area. Settlement is expected to be less than 1 inch.

- *Overexcavated and Replaced Soils*

If the depth of unsuitable soils at the extreme north end are overexcavated and replaced with dense structural fill, then allowable bearing pressures on the order of four to five ksf can be used.

- *Stone Column Improved Soils*

For preliminary design, assume 3-foot-diameter stone columns on a 7-foot, center-to-center spacing extending down to glacially overconsolidated soils. The preliminary allowable bearing pressure for shallow foundations founded on improved soil is expected to be about 4 to 5 ksf. Settlement is expected to be on the order of 1 to 2 inches.

- *Jet Grout Improved Soils*

The bearing capacity of jetted grout can be controlled by the grout formulation and the degree of soil mixing. Unconfined compressive strength of the soilcrete can be about 100 to 1000 pounds per square inch (psi). Settlement of jet grouted soils is likely negligible, provided the grouted zone bears upon dense glacial soils. If the jet-grouted zone bears on stone column ground improvement, 1 to 2 inches of settlement can be expected depending on the column length and replacement ratio.

Base Slab Design

Base slabs founded below ESUs 1 through 3 (Holocene deposits) may bear directly upon the excavated soil. Preliminary design values of modulus of subgrade reaction (K_1) can be determined from Table 2 of RFP Appendix G4.E, Interim Letter CT-5.

The Holocene deposits are subject to liquefaction and settlement during a seismic event; therefore, base slabs founded in Holocene deposits should be supported by deep foundations or ground improvement extending into glacial soils.

Settlement of Road Structures
We expect that structural slabs bearing directly on glacial soils will experience long-term settlement due to dead loads less than 1 inch. Deformations due to traffic loads will depend upon the structural design of the base slab and modulus of subgrade reaction.

We expect that structural slabs founded in Holocene deposits will be supported by deep foundations or ground improvement extending into glacial soils. The long-term settlement due to dead loads for structures supported by deep foundations or ground improvement is less than 1 to 2 inches. The modulus of subgrade reaction for a slab bearing on deep foundation or ground improvement will be greater than unimproved soil. The increase in modulus is proportional to the size and spacing of deep foundations or the type and replacement ratio of ground improvement. Ground improvement may consist of stone columns or jet grouting. The improved soil modulus would be limited by the modulus of the stone columns or jet grout and the composite modulus would generally increase as the replacement ratio increased.

6. USE OF SOIL NAIL SHORING

Soil nailing is a shoring system that has gained popularity in the Seattle area because it tends to be more economical than conventional soldier pile/tieback shoring. At this site, soil nailing would need to take into account the presence of about 20 feet of unconsolidated fill soils and ESU 2 soils. The use of vertical elements (i.e., closely spaced small soldier piles) would likely be required to maintain face stability of the excavation lifts before applying shotcrete.

In addition, soil nailing is a passive system which can often have a tendency to move more than a conventional shoring system. Conventional shoring systems have the advantage of using post-tensioned tieback anchors.

Soil nailing would only be considered appropriate a far north as about Station 302+50. Settlement-sensitive buildings on either side of the alignment may preclude the use of soil nailing.

We understand that Malcolm Drilling is currently evaluating the economics of using soil nail shoring in this part of the alignment. Give the fact that conventional shoring will be required for at least a portion of the North portal cut-and-cover section, it may not reduce costs to introduce an additional construction method next to the soldier pile and tieback anchor walls.

7. DRAINAGE AND WATERPROOFING

Appendix G4.E addresses issues of drainage, waterproofing, and hydrostatic pressures. Typically, this portion of the tunnel would be treated as a below-grade structure associated with a building. The typical approach would be to hang drainage material on the shoring system. We recommend that synthetic drainage media be continuous over the face of the excavation. Appropriate waterproofing material can then be placed over this drainage material. The drainage media can be directed to suitable outlets at the base of the excavation where it can be tight-lined to a suitable outlet or sump pump system. The permanent wall can then be poured against the waterproofing. In this manner the permanent wall (either independent of the shoring system or incorporated into the shoring system if the shoring system is to be used for permanent support of the subgrade walls) can be designed for drained conditions and does not have to be designed for the full hydrostatic head.

The second paragraph on page 12 of Appendix G4.E contains a discussion on assumed groundwater elevations used by WSDOT in their preliminary recommendations for earth pressures. The temporary case for apparent earth pressures is based on active conditions and the permanent case is based on at-rest conditions. The regional water table is expressed at elevation +30 feet (more or less the top of the glacial till layer (i.e., top of ESU 4). The authors acknowledge that the perched groundwater level can be assumed commensurate with the bottom of the excavation if positive drainage is provided.

The use of full hydrostatic head is appropriate if no drainage is provided between the shoring wall and permanent wall. Given that the water that should be encountered within the depth of excavation is perched water and should therefore be of limited extent we would anticipate that flows to a long-term drainage system would be relatively low.

8. CLOSING

We appreciate the opportunity to provide these recommendations and trust that this memo meets your current needs. Please contact us if you have any questions.

J:\jobs\1763800\North Portal Memo.doc

DRAFT
Design Evaluation
8/3/10
Strutted Support for TBM Launch Pit

Brief Description: Structural Evaluation of Strutting TBM Launch Pit Excavation

Objective: To determine if strutting the TBM Launch Pit is feasible and cost effective.

Existing Conditions: Tie-back anchors to support TBM Launch Pit.

Alternatives Evaluated: Strutted support of the TBM Launch Pit.

Summary and Conclusions: It is structurally feasible to strut the excavation in lieu of using tie-backs. The design team's cursory review of costs indicates a strutted structure is roughly 22% more expensive than a tied structure. Determination of approach used will be based on determination of construction costs and constructability with input from the CJV.

Created by:	*Sam Burch*
Date:	*8-3-10*
Reviewed by:	*Rich Johnson*
Date:	*8-7-10*
Approved by:	
(Dan Dixon or Rich Johnsan)	*Rich Johnson*
Date:	*8-7-10*

Background:
As an alternative to supporting the Tunnel Boring Machine launching pit support of excavation (SOE) walls with tie-back anchors, an option to strut the excavation was investigated. The intent of this investigation is to determine if it is structurally feasible to strut the excavation and develop quantities for an order of magnitude comparison with the tie-back alternative.

System Description:
The strutted excavation option consists of four primary structural elements: secant pile walls, a concrete base slab, concrete struts, and a composite concrete and steel wale. The strutted system with openings between the transverse struts of 50 feet in the longitudinal direction and 60 feet in the transverse direction was assumed for the purposes structural analysis. Below the strut level the horizontal clear space between the interior face of the pile walls of 75 feet was assumed for purposes of structural analysis. The vertical clear distance of 6o feet from top of the bottom slab to the bottom of the struts was assumed for purposes of structural analysis. The longitudinal of the launching length of 175 feet was assumed, consisting of three 50' bays and the width of the struts. See the attached sketches for dimensions of the structural elements.

Construction Considerations:
The piles, struts and wales are sized for the long term construction configuration where both the base slab and the upper strut and wale are in place, with a clear span between them. The base slab is approximately ten feet thick and excavation for the slab results in substantial loss of passive support in front of the piles. The excavation will require temporary struts to be installed between the upper brace level and the bottom of the excavation until the base slab is in place.

Additionally, an investigation of wall deflection will be required to determine if temporary braces above the strut will be necessary to limit wall movement prior to installation of the strut and wale system. These braces would be located near the top of the wall.

Conclusion:

Based on preliminary design analysis, it is feasible to strut the excavation in lieu of using tie-backs. Consideration of gross construction cost indicates the strutted system is roughly 22% more expensive than the tied structure. A cursory review of the perceived construction indicates the strutted system provides no substantial benefit in terms of construction schedule and it may impede excavation efforts and placement of the TBM.

Quantity Summary:

	Tie-Backs	Struts
Concrete (CY)	8,198	11,463
Reinforcing (lb)	1,345,606	2,019,814
Steel (lb)	N/A	79,625
Tie-backs (each)	690	N/A
Pile Excavation (CY)	3,310	5,492

For SR99	Job no. 46055	Sheet no.
Made by SWB	Checked by TZ	Backchecked by
Date 8/3/10	Date 8/4/10	Date

HNTB

INTERNAL STRUT OPTION

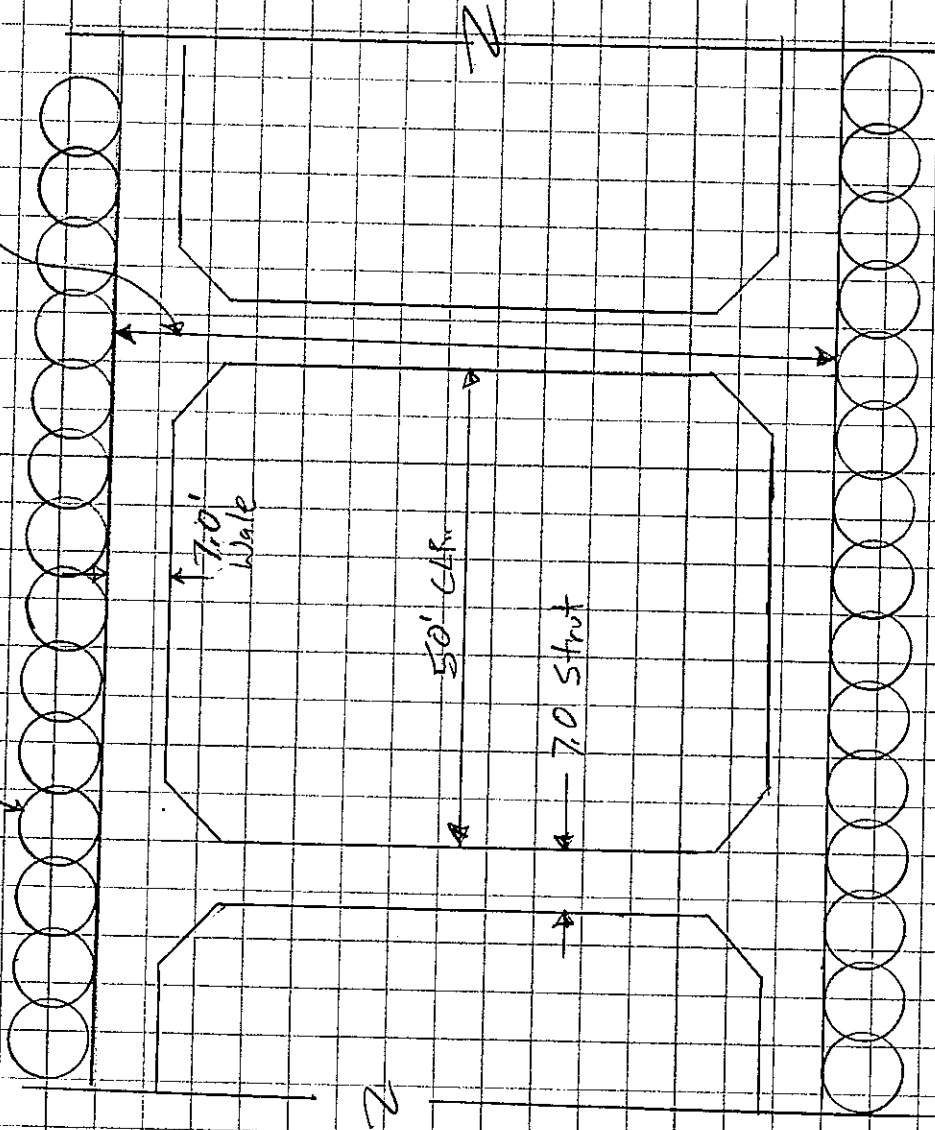

PLAN

MF-101-3PA

For SR99	Job no. 46055	Sheet no.
Made by SWB	Checked by TZ	Backchecked by
Date 8/3/10	Date 8/4/10	Date

HNTB

INTERNAL STRUT OPTION

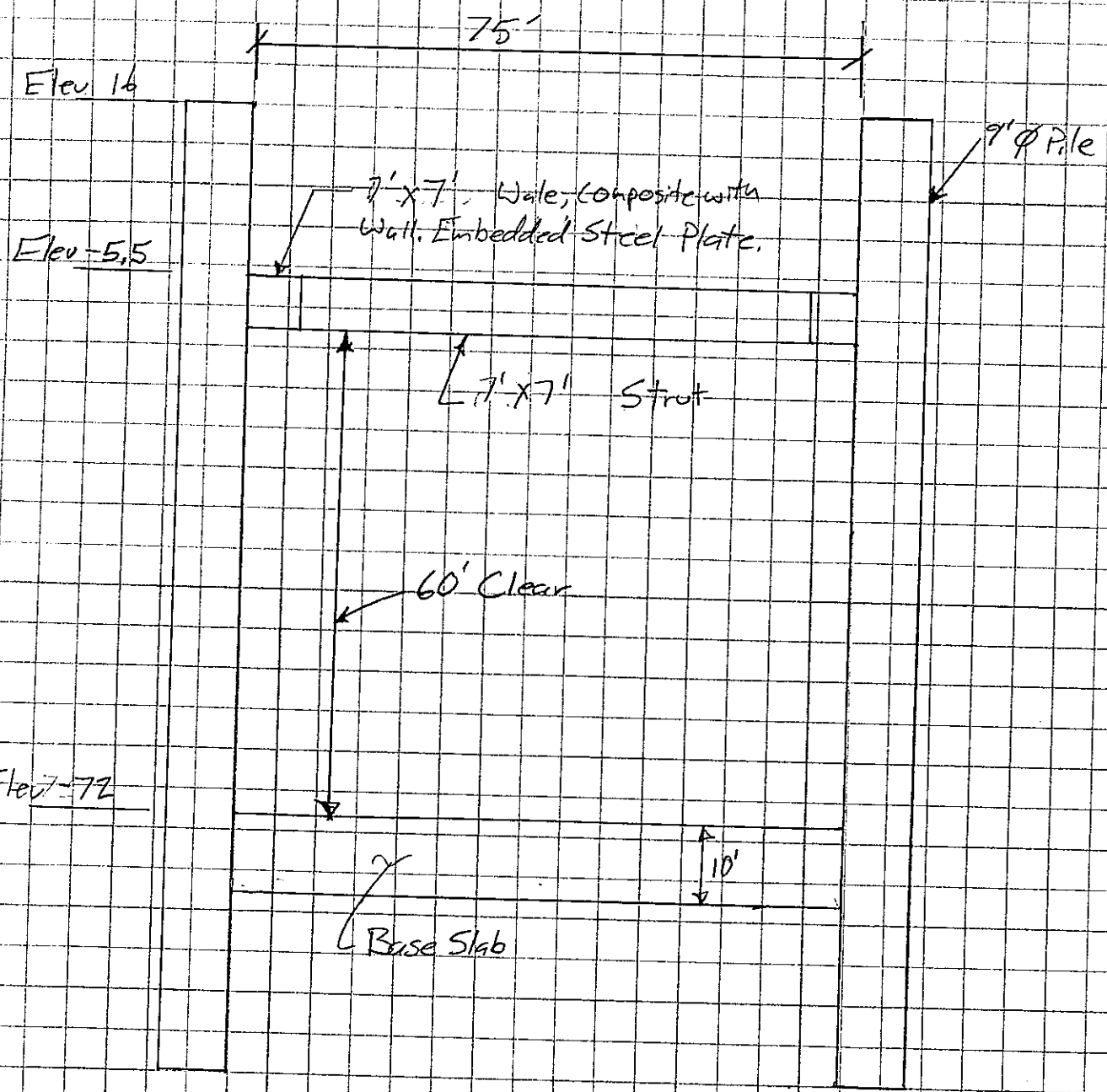

SECTION

HNTB	The HNTB Companies Engineers Architects Planners	Made SWB	Date 8/3/2010	Job Number 46055
		Checked	Date	
For	SR99 Tunnel - Strutted Launch Pit Consideration	Backchk'd	Date	Sheet No.

Quantities

Launching Pit Dimensions

Overall Pit Length	176	ft	3 - 50' clear bays with 4 - 7.0 struts
Overall Pit Width	75	ft	Measured to inside of piles
Exposed Wall Height	98	ft	To bottom of base slab

Strutted Option

Pile Dia. (ft)	Depth (ft)	# Piles	Vol Conc. (CY)	#/CY Steel (lb)	Total Steel (lb)
9	111	21	5,492	185	1,016,074

	# Each	Length (ft)	Width (ft)	Depth (ft)	Volume (CY)	#/CY Steel (lb)	Total Steel (lb)
Wale	2	176	7	7	639	250	159,704
Strut	4	61	7	7	443	250	110,704
Base Slab	1	176	75	10	4,889	150	733,333
Total					**5,971**		**1,003,741**

	# Each	Length (ft)	Width (ft)	Depth (ft)	Volume (CF)	#/CF Steel (lb)	Total Steel (lb)
Steel Plate	6	30	5.42	0.17	163	490	79,625

Tie-Back Option

Pile Dia. (ft)	Depth (ft)	# Piles	Vol Conc. (CY)	#/CY Steel (lb)	Total Steel (lb)
5	111	41	3,310	185	612,272

Tie-backs

Exposed Wall	34,496	SF
Area per Anchor	50	SF
# Anchors	690	EA

	# Each	Length (ft)	Width (ft)	Depth (ft)	Volume (CF)	#/CF Steel (lb)	Total Steel (lb)
Base Slab	1	176	75	10	4,889	150	733,333

Summary

	Tie-Backs	5truts
Concrete (CY)	8,198	11,463
Reinforcing (lb)	1,345,606	2,019,814
Steel (lb)	N/A	79,625
Tie-backs (each)	690	N/A
Pile Excavation (CY)	3,310	5,492

HNTB	The HNTB Companies Engineers Architects Planners	Made SWB	Date 8/2/2010	Job Number 46055
		Checked	Date	
For SR99 Tunnel		Backchk'd	Date	Sheet No.

South End Rough Shoring Wall Costs

Secant Pile Shoring

Secant pile shoring costs are based on WSDOT BDM unit costs for drilled shafts. Costs are calculated per lineal foot of shaft and also given per SF of wall.

Pile Area

Pile Dia (ft)	Area (SF)	Vol/ft (CY)
5.0	19.6	0.7
9.0	63.6	2.4

Item	Unit Cost	Total $ 5 ft.	Total $ 9 ft.
Excavation	$ 450.00	$ 327	$ 1,060
Conc. 4000P	$ 300.00	$ 218	$ 707
Reinforcing*	$ 1.00	$ 144	$ 468
	Total	$ 690	$ 2,235

*Assume 1.5% reinforcing.

Reinforcing #/LF

Pile Dia	lb/lf
5.0	144
9.0	468

Pile Overlap = 0.75 ft

Pile Dia	Area	Cost/SF
5.0	4.3	$ 162
9.0	8.25	$ 271

Restraint Costs

Tie backs

Cost Each=	3000
Area Supported =	40

Steel lb/CF = 490

Cost/SF $ 75.00

Waler and Struts

Element	L (ft)	W (ft)	D (ft)	Vol. (CF)
Strut	31.0	7.0	7.0	1519.0
Waler	57.0	6.5	6.5	2408.3
Steel	30.0	5.4	0.2	27.1

Total Conc. 145 CY
Total Steel 13271 LB

Unit Costs
Concrete $ 500.00
Steel $ 1.25

Total Costs
Concrete $ 72,727
Steel $ 16,589
Total $ 89,315

	L (ft)	H (ft)	Area (SF)
Supported Area	56	88	4928.0

Cost/SF $ 18.12

System Cost Comparison ($/SF)

Tie-Backs	$ 237	100%
Strut and Wale	$ 289	122%

SR99 Bored Tunnel

DRAFT
Technical Memorandum
August 9, 2010
Revise Radio Rebroadcast System Configuration

Brief Description: Combine radio systems to one antenna system in the tunnel

Objective: Provide efficient radio system.

Existing Conditions: RFP requires two tunnel radio antenna systems.

Alternatives Evaluated:

1. Two antenna systems in the tunnel as shown in the RFP
2. Combine into one antenna system per the attached schematic.

Summary and Conclusions: The RFP shows two tunnel antenna systems, one for the AM/FM rebroadcast system and the second for two-way radio systems. The distributed antenna system specified will not work for VHF frequencies. These frequencies are used by many of the service agencies that will be first responders to incidents in the tunnel. The distributed antenna system will also require space in the tunnel ceiling for flat panel antennas at 100 foot intervals for each roadway as well as the emergency corridor. This system will also require additional equipment in each electrical room that will need to be maintained. The proposed system eliminates the distributed antenna system and installs all radio frequencies on the two radiating antennas shown in the plans. A third radiating antenna may be required to cover the emergency egress corridor. A second counterpoise is proposed for each roadway to provide suitable coverage for the AM radio system.

The distributed antenna system does not appear to meet the requirements in the RFP. We believe that our proposal with one tunnel antenna system will meet the WSDOT requirements. The proposed system meets the requirements, is more efficient, will be easier to maintain and is cost effective.

Created by: *Patty Fordyce*
Date: *August 9, 2010*
Reviewed by: _____
Date: _____
Approved by:
(Dan Dixon or Rich Johnson) _____
Date: _____

DRAFT
Technical Memorandum
Date 8-10-2010
Evaluation of TBM Face Pressure

Brief Description: Provided estimated face pressure of the tunnel boring machine (TBM).

Objective: Provide minimum design requirements for the TBM.

Existing Conditions: Not applicable.

Alternatives Evaluated: Variables of anticipated parameters related to face pressure.

Summary and Conclusions: The minimum face pressure that the TBM should be designed to resist is 83 psi (5.72 bar) at the axis of the TBM

Discussion:

The purpose of this memorandum is to provide a summary of the designer's input to the Contractor Joint Venture (CJV) with regard to the estimated face pressure of the TBM along the tunnel alignment for use and consideration in the procurement of the TBM.

Intecsa's July 16, 2010 TBM face pressure memorandum (Attachment 1) provides detailed calculations of the expected face pressure during operation and recommended design TBM face pressures along the tunnel alignment at 200 ft intervals. Intecsa's memorandum explains the analytical basis and the methodology used to calculate the face pressures. Intecsa's recommendations are based on engineering analysis of soil and water loadings, Intecsa's previous tunneling experience with similar projects, and published data to predict practical TBM face pressures along the alignment. Intecsa's calculations estimated water head based on their interpretation of the permeability of overburden soils along the tunnel alignment, rather than the full hydrostatic pressure. Additionally, Intecsa estimated a reduced coefficient of lateral earth at rest (Ko) compared to the baseline Ko in the GBR. Based on these methods and assumptions, Intecsa recommended a maximum face pressure of 62 psi at the axis of the tunnel (factor of safety of 1.2).

The design team consulted Mr. Scott Bender, our hydrogeologist with local tunneling experience (e.g., Brightwater tunnel) on the question of hydrostatic pressure along the alignment. Mr. Bender is a noted expert in the same types of glacial deposits the SR 99 TBM will encounter, including his current involvement in dewatering for intervention of the two TBMs that were stuck on the Brightwater Project. Mr. Bender's response is included as Attachment 2. He indicate that because the TBM will be within or proximate to the high permeability, regional aquifer (ESU 5) the TBM with experience the full hydrostatic pressure of this unit. Additionally, the lower permeability silts and clays the TBM will bore

through contain higher permeability fractures that will transmit the full hydrostatic pressure to the face of the TBM. These fractures in the silts and clays were very prevalent in other local tunneling works and are sometimes relied as part of designing tunnel intervention dewatering systems.

The design team also reviewed measurements of hydrostatic heads provided in the GEDR for the SR 99 bored tunnel and also for additional projects. Attachment 3 shows measurements of hydrostatic pressure within or adjacent to the tunnel elevation at various points along the alignment, that serves as the basis for the regional hydrostatic head indicated on the tunnel profile provided in the GBR. This information indicates the hydrostatic pressures measured at tunnel depth (excluding the potential effects of perched groundwater) indicate hydrostatic pressures similar to that provided in GBR profile.

Based on the calculation methodology detailed in Intecsa's July 16, 2010 face pressure memorandum, the design team performed a sensitivity analysis to determine the effects of considering the full hydrostatic pressure measured near the face of the TBM (Attachment 4). The sensitivity analysis also evaluated the effects of considering the Ko values provided in the GBR, which were generally consistent with the average Ko values as calculated from in situ pressuremeter test measurements. We understand that Intecsa's experience indicates that using the maximum values of Ko are likely to under estimate settlements, however, the actual ground pressure on the face of the TBM is expected to be bounded by the earth pressure at rest (Ko) and the active earth pressure (Ka). The design team's sensitivity analyses indicated both hydrostatic head and Ko significantly affect the estimated TBM face pressure and accounting for both yields an estimated upper bound face pressure of 83 psi at the tunnel axis (factor of safety of 1.0).

Due to the complex nature of the ground, mixed ground conditions along the alignment, high variation in water permeability for different layers, fractures in the silts and clays, and the proximity of the high permeability, regional aquifer to the TBM along the majority of the alignment, is the design team recommends the TBM be capable of sustaining the full hydrostatic pressure in addition to the maximum soil loads along the tunnel alignment. The maximum pressure anticipated for such condition could be as high as 83 psi at the tunnel axis, compared to 62 psi estimated by Intecsa.

The recommendation of having the TBM able to sustain the full hydrostatic pressure at the face is based the inter-bedded nature of the soil layers and the evidence from monitoring wells that the full hydrostatic pressure might be acting on the face at multiple locations along the tunnel. This

recommendation is in line with the statement provided in the GBR section 5.1.6 – Face Stability stating "Loss of face pressure and face stability is a serious risk in urban construction especially with the varied and inter-layered ground conditions exhibited along the tunnel alignment. In addition, the more permeable soils will have a higher risk of groundwater flow and soil flow into the cutting chamber. It will be necessary to fully account for the groundwater pressure, stability of ground and earth pressure in front of the cutterhead to ensure tunnel face stability and to minimize ground losses and the subsequent ground subsidence."

While Intecsa is likely correct in estimating the face pressure needed to control settlements, we recommend designing the TBM for the higher pressure based on the approach outlined above, to provide a margin of safety.

Attachments:
1- Intecsa's July 16, 2010 TBM Face Pressure Memorandum
2- Scott Bender's August 2, 2010 Email
3- SR 99 Bored Tunnel – Deep Historic Explorations Water Level Summary
4- Face Pressure Calculation Sensitivity Analysis provided by Hart Crowser

Created by:	*Samuel Estefania, Samer Sadek, Mike Bailey*
Date:	*8-10-2010*
Reviewed by:	*Rich Johnson*
Date:	*8-10-2010*
Approved by:	
(Dan Dixon or Rich Johnson)	*Rich Johnson*
Date:	*8-10-2010*

INDEX

1. INTRODUCTION

It is a well known fact that settlements induced by tunnelling are mainly caused by some factors depending on the T.B.M. geometry and ground characteristics. Those factors are located at the front, along the shield and at the rear. For this reason, to work with an adequate pressure is an important tool to reduce the expected settlements.

So, it is necessary to balance the external soil pressure by a counterpressure in the working chamber. To calculate the required value, some approach methods are given, depending also on the soil type.

The global stability models allow to approximate the minimum and the maximum support pressure that should be applied during the execution of the tunnelling works.

The principal risks (or hazards) in urban tunnelling which are linked to the face pressure design can be identified as follows:

• unforeseen or unexpected ground conditions;

• variable and mixed face conditions;

• ground loss/collapse at the face, causing flooding and/or large settlements;

• man-made obstructions or hazards to tunnelling, including utilities;

• collapse of the completed tunnel;

• human errors.

2. ANALYSIS OF THE FACE STABILITY

Earth pressure balance shields provide continuous support of the tunnel face using freshly excavated soil, which completely fills the working chamber under pressure. The supporting pressure is achieved through control of the incoming and outgoing materials in the chamber, i.e., through regulation of the screw conveyor rotation and the excavation advance rate.

2.1. LIMIT EQUILIBRIUM METHODS

The study of the stability of the tunnel face is a complex problem. However, in many cases the reference to the so-called methods of limit equilibrium (LEM) give satisfactory solutions, representing still an important practical tool for design. A

comprehensive treatment of these subject is furnished by W. Broere (2001). In table 1, some referenced LEM, applicable to the general condition of cohesive-frictional ground, are shown.

The static stability of the face could not be a sufficient design criterion to avoid settlement on the surface: particularly for shallow tunnels in urban environment; it is also necessary to achieve the stability of the excavation both around the shield and the lining (Aristaghes & Auturi, 2003), as well as to preserve the hydrogeological conditions

Method and Basic formulations	Scheme
1. Method of Jancsecz and Steiner (J&S, 1994) According to the model of Horn (1961), the three dimensional failure scheme consists of a soil wedge (lower part) and a soil silo (upper part). The vertical pressure resulting from silo and acting on soil wedge is calculated according the Terzaghi's solution. A three dimensional earth coefficient ka_3 is defined as: $ka_3=(\sin\beta\cos\beta-\cos^2\beta\tan\phi-K\alpha\cos\beta\tan\phi/1.5)/$ $(\sin\beta\cos\beta+\sin^2\beta\tan\phi)$ where: $K\approx[1-\sin\phi+\tan^2(45+\phi/2)]/2$ $\alpha=(1+3t/D)/(1+2t/D)$	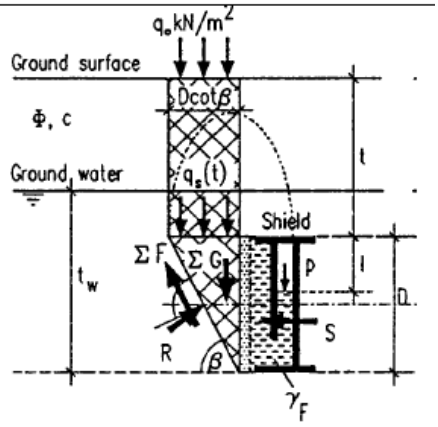

2. Method of Leca & Dormieux (L&D, 1990) This method is based on the upper and lower limit theorems with a 3D-modelling. The upper(+) and lower (−) limit solutions are derived by means of cinematic and static method, respectively, so giving an optimistic (by defect) and pessimistic (by excess) estimation of the stabilizing pressure. In the case of dry condition, the stabilizing face pressure σ_T is equal to (Ribacchi, 1994): $\sigma_T=-c'*ctg\varphi'+Q\gamma*\gamma*D/2+Qs*(\sigma_s+c'*ctg\varphi')$ $Q\gamma, Qs$ = adimensional factors (from normograms), function of H/a and φ′, where: a = radius of the tunnel; H= thickness of the ground above the tunnel axis.	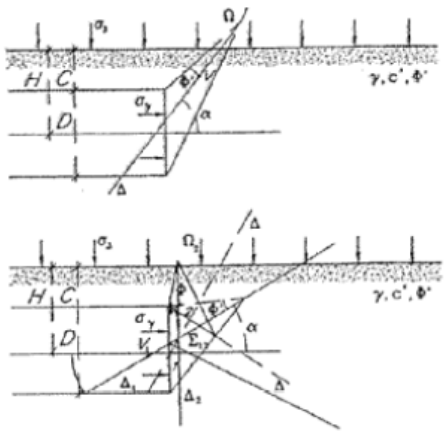 Note: a third failure mechanism refers to blow-out failure in very shallow tunnel (σ_T is so great that soil is heaved in front of the shield).

3. Method of Anognostou and Kovari (A&K,1996) This method is based upon the silo theory (Janssen, 1895) according to the tri-dimensional model of sliding mechanism proposed by Horn. The analysis is performed in drained condition, and a distinction between the stabilizing water pressure and effective pressure in chamber of EPBS is presented. If a gradient between water pressure in the chamber and in the ground exists, destabilizing seepage forces occur and a higher effective pressure is required at the face. However, accepting this flow, the total stabilizing pressure is lower than in the case of imposed hydrogeological balance. The effective stabilizing pressure (σ') is: $\sigma' = F_0\gamma' D - F_1 c' + F_2\ \gamma'\Delta h - F_3 c'\Delta h/D$ If the material in the chamber is in a fluid state, $\sigma'=0$ and solving the equation for Δh the necessary water pressure for equilibrium is derived. F_0, F_1, F_2, F_3= adimensional factors from normograms, function of H/D and φ'.	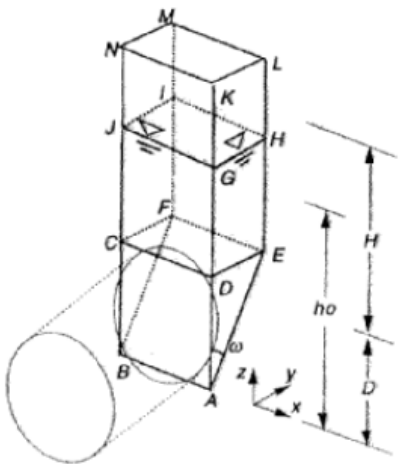 Note: The original analysis consider k_o=0.8-0.4 for the prism and for the wedge (tunnel level), respectively.

Tab.1: Selected methods for analysis of face stability in cohesive-frictional ground

2.2. PRACTICAL APPLICATION

Obviously, the aim is to exert at the working front an internal pressure which, more or less, equalizes the external one.

The external pressure is composed by the ground pressure and the water pressure (if any). Here after is included a Table with some relations used in Japan and reported by Kanayasu et al (1995).

As can be seen, all of them include the two terms described before as well as, in some cases, an additional pressure.

Concerning the earth pressure, it can be seen that both values of coefficient of pressure at rest (K_o) and active coefficient (K_a) can be used, depending on soil type.

Unfortunately, it is generally difficult to determine the coefficient of at-rest earth pressure, which is generally applied for granular soils while K_a is used for cohesive soils.

An empirical rule for normal-consolidated soil (NC) was proposed by Jaky (1944) and the derived simplified form is: ko(NC)=1-sin Φ'. As reported by Lancellotta (1987), the

following equation was proposed for over-consolidated soil (OC): ko(OC)=ko(NC)*OCR*α, where OCR is the Over Consolidation Ratio and α=0.46±0.06 for low-sensitive clays (Jamiolkowski et Al.,1979).

Furthermore, it is a common opinion (see for example Reda, 1994) that the stability of the excavation is controlled if the face support pressure is between the active and the at-rest ground pressure (i.e. σKa <σT< σKo). The earth pressure becomes active or passive when the ground deforms plastically towards the cutterhead or in the opposite direction (i.e. the ground is pushed by the EPBS), respectively (fig.1).

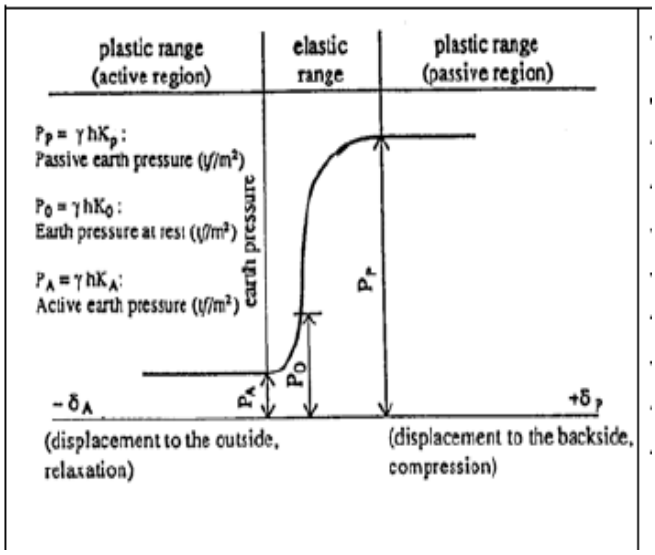

Fig 1.- Relationship between earth pressure and displacement.

Kanayasu et al., collaborators of a survey on Japanese Shield Tunneling, pointed out that in most cases the active earth pressure is used as the lowest permissible level of face pressure, but, in general, there is currently no clear principle for defining the design face support pressure.

When tunnels are below the water table, it will necessary to consider seepage forces because of the destabilising effect they introduce. Gravel, sand, silt or their combination become extremely unstable under the influence of seepage forces due to the rapid decrease in its shearing strength and the tendency to erosion.

Examples of face pressure adopted by EPBS in Japan are summarised in Fig.2. On the basis of available information, it seems possible to observe that in the European practice the hydrostatic pressure (σw) is generally assured and a supplementary component for the ground thrust is added. A quoted rule of thumb (COB, 1996, in

Broere, 2001) is σT=kaσ'v+σw+20kPa, but also σT=σw+20kPa has also been followed on the basis of practical experiences (see for example Leblais et al., 1996).

Outer Diameter (mm)	Soil Type	Face Pressure
7,450	soft silt	earth pressure at rest
8,210	sandy soil, cohesive soil	earth pressure at rest + water pressure + 0.2 kgf/cm^2
5,540	fine sand	earth pressure at rest + water pressure + fluctuating pressure
4,930	sandy soil, cohesive soil	earth pressure at rest + (0.3 ~ 0.5 kgf/cm^2)
2,480	gravel, bedrock, cohesive soil	earth pressure at rest + water pressure
7,780	gravel, cohesive soil	active earth pressure + water pressure
7,350	soft silt	earth pressure at rest + 0.1 kgf/cm^2
5,860	soft cohesive soil	earth pressure at rest + 0.2 kgf/cm^2

Fig 2.- Examples of face pressure (EPBs) in Japan (Kanayasu et al, 1995)

It can be seen that the highest excess support pressures are needed in sandy soils with permeabilities K = 10^{-3}-10^{-1} cm/s. This corresponds with the field observations by Mori that the reduction in effective support pressure due to excess pore pressures can become a major problem in soils with permeabilities within the indicated range.

3. GEOTECHNICAL CONDITIONS

The soils along the alignment have been grouped depending on soil type, relative density, and behavioral characteristics into eight basic ESUs :.

- ESU 1: Engineered & Non-Engineered Fill (ENF)
- ESU 2: Recent Granular Deposits (RGD).
- ESU 3: Recent Clay and Silt (RCS).
- ESU 4: Till Deposits (TD).
- ESU 5: Cohesionless Sand and Gravel (CSG).
- ESU 6: Cohesionless Silt and Fine Sand (CSF).
- ESU 7: Cohesive Clay and Silt (CCS).
- ESU 8: Till-Like Deposits (TLD)

ESU 1 is engineered and non-engineered fill. ESUs 2 and 3 are shallow Holocene deposits. These three upper soil units will be excavated in the Retained Cut and Cut

and- Cover sections at the portals and for 200 to 300 feet in the crown of the Bored Tunnel at the southern end of the drive. ESUs 4 to 8 are Quaternary glacial deposits.

These will be excavated throughout the Project.

All eight ESUs will be encountered in the zone between the ground surface and the Bored Tunnel. The interpreted range of engineering parameters of ESUs are follows:

Engineering Soil Unit[4] or Specific Geologic Unit	Geologic Unit(s)[4]	USCS[3]	Total Unit Weight γ_t (pcf)	At-Rest Earth Pressure Coefficient K_o	Effective Stress Strength Parameters		Undrained Shear Strength S_u (psf)	Shear Moduli		Poisson's Ratio ν	Hydraulic Conductivity	
					c' (psf)	ϕ' (deg)		G_{MAX} (psi)	G_{U-R} (psi)		$K_{horizontal}$ (cm/sec)	$K_{vertical}$ (cm/sec)
1 - Engineered & Non-Engineered Fill (ENF)	Hf	SP-SM, SM, SC, SW, GP, GP-GM, GW-GM, GM, GC, ML, CL	120 (100 - 135)	0.45 (0.35 - 0.5)	0	34 (30 - 40)	0	10,000 (2,000 - 30,000)	- -	- -	$5x10^{-2}$ ($1x10^{-4}$ - $1x10^{-1}$)	$1x10^{-2}$ ($5x10^{-5}$ - $5x10^{-2}$)
2 - Recent Granular Deposits (RGD)	Hf, Ha, Hb, Hrw, Qvri, Qvro, Qvat	SP, SW, SM	120 (100 - 130)	0.5 (0.4 - 0.5)	0	33 (28-36)	0	17,000 (5,000 - 50,000)	2,300 (1,000 - 4,000)	0.25 (0.1 - 0.3)	$1x10^{-2}$ ($1x10^{-5}$ - $5x10^{-2}$)	$1x10^{-3}$ ($1x10^{-6}$ - $5x10^{-3}$)
Fill (Hf)	Hf	SP-SM, SM, SC, SW, GP, GP-GM, GW-GM, GM	115 (100 - 130)	0.45 (0.35 - 0.5)	0	34 (30 - 40)	0	8,000 (2,000 - 30,000)	- -	- -	- -	- -
Alluvium (Ha)	Ha	SP, SP-SM, SM	115 (110 - 125)	0.5 (0.45 - 0.55)	0	30 (26 - 34)	0	5,000 (2,000 - 12,000)	3,000 (1,000 - 4,000)	- -	- -	- -
Beach (Hb), Reworked Deposits (Hrw), and Recessional Deposits (Qvro, Qvri, Qvat)	Hb, Hrw, Qvri, Qvro, Qvat	SP-SM, SM, SC, GM, ML	125 (110 - 135)	0.4 (0.35 - 0.45)	0	36 (32 - 40)	0	16,000 (1,000 - 30,000)	- -	- -	- -	- -
3 - Recent Clay and Silt (RCS)	He, He-Ha, Hl, Qvri, Qvrl	CL, CH, ML, MH	112 (110 - 115)	0.6 (0.5 - 0.6)	0 (0 - 200)	25 (22-28)	600 (400 - 1,500)	9,500 (3,000 - 55,000)	900 (600 - 1,700)	0.30 (0.2 - 0.4)	$1x10^{-4}$ ($1x10^{-6}$ - $5x10^{-4}$)	$1x10^{-5}$ ($1x10^{-7}$ - $5x10^{-5}$)
Estruarine Deposit (He)	He	ML, CL	115 (100 - 130)	0.5 (0.4 - 0.55)	0	32 (26 - 38)	600 (0 - 1,000)	5,000 (3,000 - 22,000)	1,000 (800 - 1,700)	- -	- -	- -
Estuarine - Alluvium Transitional (He-Ha)	He-Ha	SM, ML	115 (105 - 125)	0.5 (0.45 - 0.55)	0	28 (26 - 31)	0	5,000 (2,000 - 20,000)	1,000 (800 - 1,700)	- -	- -	- -
Lacustrine (Hl)	Hl	CH, CL, MH	110 (100 - 120)	0.7 (0.55 - 0.75)	0	20 (15 - 25)	450 (300 - 600)	10,000 (15,000 - 55,000)	500 (500 - 1,000)	- -	- -	- -
4 - Till Deposits (TD)	Qpgt, Qpgm, Qpgd	SM, ML, GM, GC	145 (125 - 150)	0.6 (0.4 - 1.4)	5,000 (0 - 9,000)	40 (30-44)	13,000 (8,000 - 20,000)	170,000 (20,000 - 500,000)	220,000 (50,000 - 500,000)	0.35 (0.2 - 0.4)	$1x10^{-6}$ ($5x10^{-7}$ - $5x10^{-4}$)	$1x10^{-7}$ ($5x10^{-8}$ - $5x10^{-5}$)
5 - Cohesionless Sand and Gravel (CSG)	Qpgo, Qpnf	SP, SW, SM, GP, GW, GM	130 (125 - 140)	0.8 (0.4 - 1.0)	0 (0 - 2,000)	39 (38-44)	0	120,000 (20,000 - 400,000)	170,000 (20,000 - 500,000)	0.35 (0.3 - 0.4)	$5x10^{-3}$ ($1x10^{-4}$ - $1x10^{-1}$)	$1x10^{-3}$ ($5x10^{-5}$ - $5x10^{-2}$)
6- Cohesionless Silt and Fine Sand (CSF)	Qpnl, Qpgl, Qpgo, Qpnf	SP, SW, SM, ML	125 (120 - 130)	0.8 (0.4 - 0.9)	0 (0 - 2,000)	39 (34-42)	0	60,000 (10,000 - 160,000)	50,000 (30,000 - 70,000)	0.35 (0.3 - 0.4)	$1x10^{-4}$ ($1x10^{-5}$ - $1x10^{-3}$)	$1x10^{-5}$ ($1x10^{-6}$ - $1x10^{-4}$)
7 - Cohesive Clay and Silt (CCS)												
Relatively Intact	Qpgol, Qpgm, Qpnl, Qpns, Qpnp, Qpnm	CL, CH, ML, MH	120 (114 - 134)	1.1 (0.6 - 1.3)	1,200 (0 - 4,000)	25 (20-30)	7,000 (2,000 - 14,000)	60,000 (10,000 - 300,000)	60,000 (5,000 - 350,000)	0.30 (0.2 - 0.4)	$1x10^{-5}$ ($1x10^{-7}$ - $1x10^{-4}$)	$1x10^{-6}$ ($1x10^{-7}$ - $1x10^{-5}$)
Slickensided, Sheared			120 (114 - 134)	1.5 (0.7 - 2.5)	0 (0 - 3,000)	15 (12-20)	0 (0 - 4,000)	60,000 (10,000 - 300,000)	60,000 (5,000 - 350,000)	0.30 (0.2 - 0.4)	- -	- -
8 - Till-Like Deposits (TLD)	Qpgd, Qpgm, Qpgt, Qpgo	SM, ML, GM, GC	145 (125 - 150)	1.0 (0.4 - 1.4)	0 (0 - 1,500)	40 (30-44)	0	200,000 (50,000 - 500,000)	220,000 (50,000 - 500,000)	0.35 (0.2 - 0.4)	$1x10^{-3}$ ($1x10^{-6}$ - $5x10^{-3}$)	$1x10^{-4}$ ($1x10^{-7}$ - $5x10^{-4}$)

Table 2.-interpreted range of engineering parameters of ESUs

Due to complex inter-layering and variation of areal extent within each of the ESUs, the presence of interbedded lenses and dikes of differing soils within each ESU along the tunnel alignment, and the large excavated diameter, there will not be any locations along the tunnel alignment where a full face of a single, consistent, uniform soil type will be encountered. For baseline purposes, “mixed face” conditions will exist along the entire tunnel alignment, with both cohesive and cohesionless soils present in the face at the same time. Multiple interfaces between ESU are expected, with the position and extent of the different ESUs in the face ranging widely in thickness and lateral extent.

4. TBM FACE PRESSURE CALCULATIONS

Individual cross sections are identified along the alignment considering local ground conditions and soil layering.

We propose the following methodology:

1. Calculation of total vertical pressure (pv) at axis level.

   $p_v = (H-h_w)\,\gamma_N + h_w\,(\gamma_N-1) + h_w$

   H axis depth

   h_w water height over the axis

   γ_N natural density

2. Calculation of horizontal pressure at the same level.

   Two cases are to be distinguished:

   . When the tunnel is on a level of cohesive soil reaching at least a thickness of 1D over the crown.

   $p_H = (H - h_w)\,\gamma_N + h_w\,(\gamma_N - 1)\,K_A + h_w$

   With $K_A = tg^2\left(45 - \frac{\phi}{2}\right)$ Active coefficient.

   . When the ground is cohesionless

   $p_H = (H - h_w)\,\gamma_N + h_w\,(\gamma_N - 1)\,K_o + h_w$

   With $K_o = 1 - \text{sen}\,\theta$ (Coefficient at rest), in the case of NC materials

Due to the ground heterogeneity, both density and friction angle correspond to the one's corresponding to the crown due to its higher influence on the results.

In the case the materials lie below water table, that is to say, along most of the alignment, we consider a decrease in cohesion and friction angle.

On OC materials, an approximated values for OCR are obtained from a regression analysis between K_0 and OCR

$$K_0 = 0.515\,\mathrm{OCR}^{0.508}$$

From at rest pressure coefficients listed in table 2 obtained from pressuremeter data, we obtain

- ESU 4, ESU-5 AND ESU-6: OCR=2
- ESU 7 AND ESU 8: OCR= 3-7

Then, K_0 (OC)=Ko(NC)*OCR*α, where OCR is the Over Consolidation Ratio and α=0.46±0.06

When the height of cohesive materials is higher than 1D over the crown, the grand pressure will be reduced following the PROTODYAKONOV parabola theory.

In these same cases, if the permeability is lower than 10^{-5} cm/s, we will apply only the water height existing on the levels of higher permeability.

When the springline goes down and the ground pressure and the water pressure, if the referred reductions were not applied, the resulting work pressures would be excessive.

For this reason, from PROTODIAKONOV theory, we shall estimate the amount of this decrease.

The volume of soil resting on the tunnel crown will be a paraboloid.

$P_v = \gamma \,.\, h$, where: $h = \dfrac{B}{2f}$; $B = b + m\,.\,tg\left(45 - \dfrac{Ø}{2}\right)$

b = D = 57'6''

m = D = 57'6'' feet

f = 1,0 (for clays and clayey sands)

f = 0,5 (for granular soils)

Consequently in the granular soils with an overburden of more than 85 feet, a discharge vault will be formed, therefore, a height of 85 feet of inmerged material will be taken. Logically, the water column must be added

It must be noted that a high effective support pressure has considerable operational disadvantages such as excessive wear of the cutter head, high torque, or arching of the muck at the entrance to the screw conveyor.

In the following table are identified the homogeneous stretches depending on the lithology and water height as well as max. and min. pressures. The recommended pressure in each case depends on the value of settlements obtained in Greenfield conditions. When the values are lower than 0,4”, the min. pressure will be taken. If >0,4”, the selected pressure would be the max, in order to decrease the settlement value.

On table 3 are shown the obtained pressures at axis level in the representative sections.

Appropriate face pressure must be maintained at all times. Frequent adjustments to tunnel operations, i.e., face conditioning, are to be expected as a result of the mixed soil conditions encountered throughout the tunnelling drive. These adjustments will be more significant within transition zones where soil units with different engineering characteristics are encountered at the face. Changes in the behavior of the face and of the excavated material will occur as the proportion of the different ESUs exposed in the face changes and require adjustments to tunnel operation. Care must be taken when tunnelling through transitional conditions to avoid ground loss from over-excavation of granular material as more resistant material is being excavated in other parts of the face.

3. From the p_H, value:

- Maximum pressure: $P_M = 1,2 \cdot P_H$
- Minimum pressure: $P_m = 0,9 \cdot P_H$.

ESU	STATION	H(1) (feet)	h_w(2) (feet)	H*(3) (feet)	Tipo	γ_N (pcf)	ϕ (º)	ϕ sat (º)	K_0	OCR	$K_{0*OCR*\alpha}$	K_A	P_V(4) (psi)	P_H(5) (psi)	P_{max}(6) (psi)	P_{min}(7) (psi)	P_R(8)AXIS (psi)	$P_{R\ crown}$ (psi)
ESU-2	200,00	58,1	39,4	58	GRANULAR	125	33	30	0,50		0,50	---	50	33,72	40,47	30,35	40	24
ESU-2	202,00	67,0	39,4	67	GRANULAR	125	33	30	0,50		0,50	---	58	37,58	45,09	33,82	45	29
ESU-5	204,00	75,9	45,9	75	GRANULAR	130	39	36	0,41	2	0,41	---	68	39,91	47,89	35,92	47	31
ESU-5	206,00	80,3	59,1	80	GRANULAR	130	39	36	0,41	2	0,41	---	72	44,91	53,89	40,42	53	37
ESU-5	208,00	91,4	49,2	86	GRANULAR	130	39	36	0,41	2	0,41	---	77	44,25	53,10	39,82	53	37
ESU-5	210,00	102,6	78,7	86	GRANULAR	130	39	36	0,41	2	0,41	---	77	51,77	62,13	46,59	62	46
ESU-5	212,00	104,8	65,6	86	GRANULAR	130	39	36	0,41	2	0,41	---	77	48,43	58,11	43,59	58	42
ESU-5	214,00	111,4	59,1	86	GRANULAR	130	39	36	0,41	2	0,41	---	77	46,76	56,11	42,08	56	40
ESU-7	216,00	122,6	59,1	48	COHESIVE	120	25	22	---	5		0,45	45	34,53	41,44	31,08	41	25
ESU-7	218,00	129,2	55,8	48	COHESIVE	120	25	22	---	5		0,45	44	33,11	39,73	29,80	29	13
ESU-7	220,00	133,7	59,1	48	COHESIVE	120	25	22	---	5		0,45	45	34,53	41,44	31,08	31	15
ESU-7	222,00	142,6	39,4	48	COHESIVE	120	25	22	---	5		0,45	41	27,94	33,53	25,15	25	9
ESU-7	224,00	147,0	39,4	48	COHESIVE	120	25	22	---	5		0,45	41	27,94	33,53	25,15	25	9
ESU-7	226,00	149,2	29,5	48	COHESIVE	120	25	22	---	5		0,45	41	25,61	30,74	23,05	23	7
ESU-7	228,00	149,2	39,4	48	COHESIVE	120	25	22	---	5		0,45	41	27,94	33,53	25,15	25	9
ESU-7	230,00	142,6	36,1	48	COHESIVE	120	25	22	---	5		0,45	41	27,16	32,60	24,45	24	8
ESU-4	232,00	180,3	19,7	43	COHESIVE	145	40	37	---	2		0,25	43	17,08	20,49	15,37	15	0
ESU-4	234,00	187,0	19,7	43	COHESIVE	145	40	37	---	2		0,25	43	17,08	20,49	15,37	15	0
ESU-4	236,00	193,7	9,8	43	COHESIVE	145	40	37	---	2		0,25	43	13,87	16,64	12,48	12	0
ESU-4	238,00	202,6	9,8	43	COHESIVE	145	40	37	---	2		0,25	43	13,87	16,64	12,48	12	0
ESU-4	240,00	213,7	19,7	43	COHESIVE	145	40	37	---	3		0,25	43	17,08	20,49	15,37	15	0
ESU-4	242,00	220,3	9,8	43	COHESIVE	145	40	37	---	3		0,25	43	13,87	16,64	12,48	12	0
ESU-4	244,00	227,0	9,8	43	COHESIVE	145	40	37	---	3		0,25	43	13,87	16,64	12,48	12	0
ESU-5-6	246,00	233,7	9,8	86	GRANULAR	125	39	36	0,41	2	0,41	---	74	33,00	39,60	29,70	29	13
ESU-5-6	248,00	233,7	9,8	86	GRANULAR	125	39	36	0,41	2	0,41	---	74	33,00	39,60	29,70	29	13
ESU-5-6	250,00	233,7	9,8	86	GRANULAR	125	39	36	0,41	2	0,41	---	74	33,00	39,60	29,70	29	13
ESU-5-6	252,00	242,6	9,8	86	GRANULAR	125	39	36	0,41	2	0,41	---	74	33,00	39,60	29,70	29	13
ESU-5-6	254,00	238,1	9,8	86	GRANULAR	125	39	36	0,41	2	0,41	---	74	33,00	39,60	29,70	29	13
ESU-5-6	256,00	231,4	39,4	86	GRANULAR	125	39	36	0,41	2	0,41	---	74	40,52	48,62	36,47	36	20
ESU-5-6	258,00	220,3	59,1	86	GRANULAR	125	39	36	0,41	2	0,41	---	74	45,54	54,64	40,98	40	24
ESU-5-6	260,00	204,8	59,1	86	GRANULAR	125	39	36	0,41	2	0,41	---	74	45,54	54,64	40,98	40	24
ESU-5-6	262,00	193,7	39,4	86	GRANULAR	125	39	36	0,41	2	0,41	---	74	40,52	48,62	36,47	36	20
ESU-5-6	264,00	180,3	39,4	86	GRANULAR	125	39	36	0,41	2	0,41	---	74	40,52	48,62	36,47	36	20

ESU	STATION	$H^{(1)}$ (feet)	$h_w^{(2)}$ (feet)	$H^{*(3)}$ (feet)	Tipo	γ_N (pcf)	ϕ (º)	ϕ sat (º)	K_0	OCR	$K_{0*OCR*\alpha}$	K_A	$P_V^{(4)}$ (psi)	$P_H^{(5)}$ (psi)	$P_{max}^{(6)}$ (psi)	$P_{min}^{(7)}$ (psi)	$P_R^{(8)AXIS}$ (psi)	$P_{R\ crown}$ (psi)
ESU-5-6	266,00	169,2	29,5	86	GRANULAR	125	39	36	0,41	2	0,41	---	74	38,01	45,61	34,21	34	18
ESU-5-6	268,00	160,3	19,7	86	GRANULAR	125	39	36	0,41	2	0,41	---	74	35,50	42,60	31,95	31	15
ESU-5-8	270,00	153,7	29,5	85	GRANULAR	125	40	37	0,40	2	0,40	---	74	37,15	44,58	33,44	33	17
ESU-5-8	272,00	147,0	29,5	85	GRANULAR	125	40	37	0,40	3	0,60	---	74	49,33	59,20	44,40	44	28
ESU-5-8	274,00	138,1	19,7	85	GRANULAR	125	40	37	0,40	3	0,60	---	74	47,61	57,13	42,85	42	26
ESU-5-8	276,00	129,2	19,7	85	GRANULAR	125	40	37	0,40	3	0,60	---	74	47,61	57,13	42,85	42	26
ESU-5-8	278,00	122,6	19,7	85	GRANULAR	125	40	37	0,40	3	0,60	---	74	47,61	57,13	42,85	42	26
ESU-5-8	280,00	113,7	9,8	85	GRANULAR	125	40	40	0,36	3	0,54	---	74	41,61	49,93	37,45	37	21
ESU-5-8	282,00	98,1	0,0	85	GRANULAR	125	40	40	0,36	3	0,54	---	74	39,63	47,56	35,67	47	31
ESU-5-8	284,00	84,8	0,0	85	GRANULAR	125	40	40	0,36	3	0,54	---	74	39,39	47,26	35,45	47	31
ESU-5-8	286,00	71,4	0,0	71,44	GRANULAR	125	40	40	0,36	3	0,54	---	62	33,19	39,83	29,87	39	23
ESU-5-8	288,00	58,1	0,0	58,11	GRANULAR	125	40	40	0,36	3	0,54	---	50	27,00	32,40	24,30	32	16

Table 3 – Working pressures deduction

(1) H Overburden over the axis

(2) h_w Water height over the axis

(3) H* Height of PROTODYAKONOV discharge vault

(4) P_V Vertical pressure at axis level

(5) P_H Horizontal pressure at axis level

(6) $P_{máx}$ Max. Recommended pressure at axis level

(7) $P_{mín}$ Min. Recommended pressure at axis level

(8) P_R Working pressure recommended

However, from these results, it would be better to reduce the stretches of the former table to homogenous ranges.

As well, apart to give the recommended values at axis level, we will give the values corresponding to the crown, where the P1 gauge is situated. To deduce the values for this level, it is necessary, taking a muck density of 81.15 pcf, to make:

$P_{crown} = P_{axis} – 16.23$ psi

All these data are represented in the enclosed geotechnical profile.

ATTACHMENT 2

From: Scott Bender [scott@benderllc.com]
Sent: Monday, August 02, 2010 7:50 PM
To: Mike Bailey
Cc: 'Rich Johnson - SEA'
Subject: RE: Face Pressure - Message 2 of 2

Mike,

While I understand the desire to lower the acting pressure during mining, I strongly advise against this consideration for this alignment. From my examination of Figure A1 of the GBR, I believe it is representative of the soil conditions along the alignment. The tunnel alignment will be in or proximate to ESU 5 soils nearly the entire length. From STA 210+00 to the north end of the alignment the tunnel will be in or just above ESU 5 soils. This is the regional aquifer. Water levels in this aquifer are very consistent. There are no perching layers that will mitigate the head pressures at the machine, particularly on the scale of the machine. We may be tempted to reduce the pressures in the portion of the alignment between STA 214+00 and 232+50 because the alignment is primarily in ESU 7 clay and silt, but because the invert is partially in or very proximate to the contact with the underlying ESU 5 sands, the machine will experience the full head pressures of the sands. Even if the invert was say 5 or 15 feet above this contact, I would still recommend using the full head pressure due to the variability of the soil contacts between the borings, and even more so, due to the fractures in the clays that can transmit those pressures to the face. These were very prevalent in the Brightwater work, and we even relied on these fractures when designing the intervention dewatering systems.

It is my opinion that there are no locations along the alignment where interventions may be performed at atmospheric pressure. All interventions will need some means (such as dewatering) of controlling water pressure.

While the GBR may state slightly higher than actual groundwater elevations in the southern end of the alignment, it is only on the order of 5 or so feet. Exhibit C-1 in Appendix C of the GEDR shows a relatively constant groundwater elevation along the alignment. The multi-level monitoring wells and pressure transducers indicate relatively constant horizontal and vertical groundwater heads. There may be some slight variations in vertical heads at a few locations, but they are not significant. While there are low-permeability units near the surface that will retard the vertical migration of contaminants, they are in perching units far above the tunnel alignment, these do not have any bearing on the pressures for the bore. In addition, I have taken a fair look at the pumping test data; these show tidal influences on the aquifer the tunnel go through. This response was quite surprising when considering the distance of the alignment from the Sound, but it shows that the aquifer is confined, and regionally extensive.

Please let me know if you have any questions or if I can provide additional information on this subject.

Regards, Scott

SR 99 Bored Tunnel - Deep Historic Explorations Water Level Summary

Boring	Tunnel Station	Offset From Tunnel (feet)	Tunnel Invert Elevation (+/- 5 feet)	Well Screen Interval Elevation (feet)		Soil Surrounding Screen	Water Level Elevation (feet)		Nominal Head at Tunnel Invert (feet)	Soil Matrix in TBM Face	Notes
				Bottom	Top		Low	High			
B-102	253+00	~ 200 west	-110	-57.4	-47.4	SM/SC	+13.5	+15	125	Mixed face: ESU 5 (cohesionless sand and gravel), ESU 6 (cohesionless silt and fine sand), ESU 4 (glacial till), ESU 7 (cohesive silt and clay), and ESU 8 (till-like) underlying more of same.	Well screen elevation is comparable to tunnel crown.
28-300 (209-1357)	252+50	~ 125 east	-110	-7.3	-17.3	SM	--	+17.2	N/A (see notes)	Mixed face: ESU 5 (cohesionless sand and gravel), ESU 6 (cohesionless silt and fine sand), and ESU 4 (glacial till) underlying more of same plus ESU 7 cohesive silt and clay.	Well is too shallow to be meaningful.
EB-5	249+00	~ 450 west	-110	-90.5	-80.5	SP-SM/SP	+11.5	+14	124	Mixed face: ESU 5 (cohesionless sand and gravel), ESU 6 (cohesionless silt and fine sand), ESU 4 (glacial till) and ESU 7 (cohesive silt and clay) underlying more of same.	Well screen elevation is below springline of tunnel elevation.
B-101	238+00	~ 250 west	-130	-76.5	-56.5	SP-SM/SM	+ 9.7	+13.6	143.6	Predominantly ESU 5 (cohesionless sand and gravel) underlying ESU 7 (cohesive silt and clay) and ESU 8 (till-like deposits)	Well screen elevation is comparable to tunnel crown.
EB-10A	213+00	< 100 west	-120	-9.4	10.6	SM/ML/CL	-0.2	+7	N/A (see notes)	Mixed face: and ESU 7 (cohesive silt and clay), ESU 5 (cohesionless sand and gravel), ESU 6 (cohesionless silt and fine sand), and ESU 4 (glacial till) underlying more of same plus recent deposits and fill.	Well is too shallow to be meaningful.
EB-10B	213+00	< 100 west	-120	-47.6	-38.3	SM/GM/GC	+4	+6.7	126.7	Mixed face: and ESU 7 (cohesive silt and clay), ESU 5 (cohesionless sand and gravel), ESU 6 (cohesionless silt and fine sand), and ESU 4 (glacial till) underlying more of same plus recent deposits and fill.	Well screen elevation is ~15 feet above tunnel crown.
EB-18A	202+00	0	-80	-9.6	10.6	SP-SM/SM/ML	+6.5	+6.9	N/A (see notes)	Mixed face: ESU 4 (glacial till), ESU 7 (cohesive silt and clay), ESU 5 (cohesionless sand and gravel), ESU 8 (till-like), ESU 2 (recent granular deposits), ESU 3 (recent silt and clay) underlying recent deposits and fill.	Well is too shallow to be meaningful.
EB-18B	202+00	0	-80	-98.3	-93.3	ML/SP-SM	+12.4	+13.4	93.4	Mixed face: ESU 4 (glacial till), ESU 7 (cohesive silt and clay), ESU 5 (cohesionless sand and gravel), ESU 8 (till-like), ESU 2 (recent granular deposits), ESU 3 (recent silt and clay) underlying recent deposits and fill.	Well screen elevation is ~13 feet below tunnel invert.
UB-102	201+00	~60 east	-70	-74.7	-69.7	SM	-6.0	+12.8	82.8	Mixed face: ESU 4 (glacial till), ESU 7 (cohesive silt and clay), ESU 5 (cohesionless sand and gravel), ESU 8 (till-like), ESU 2 (recent granular deposits), ESU 3 (recent silt and clay) underlying recent deposits and fill.	Well screen elevation is at tunnel invert.

Variations in Horizontal Pressure For Different Parameter Assumptions

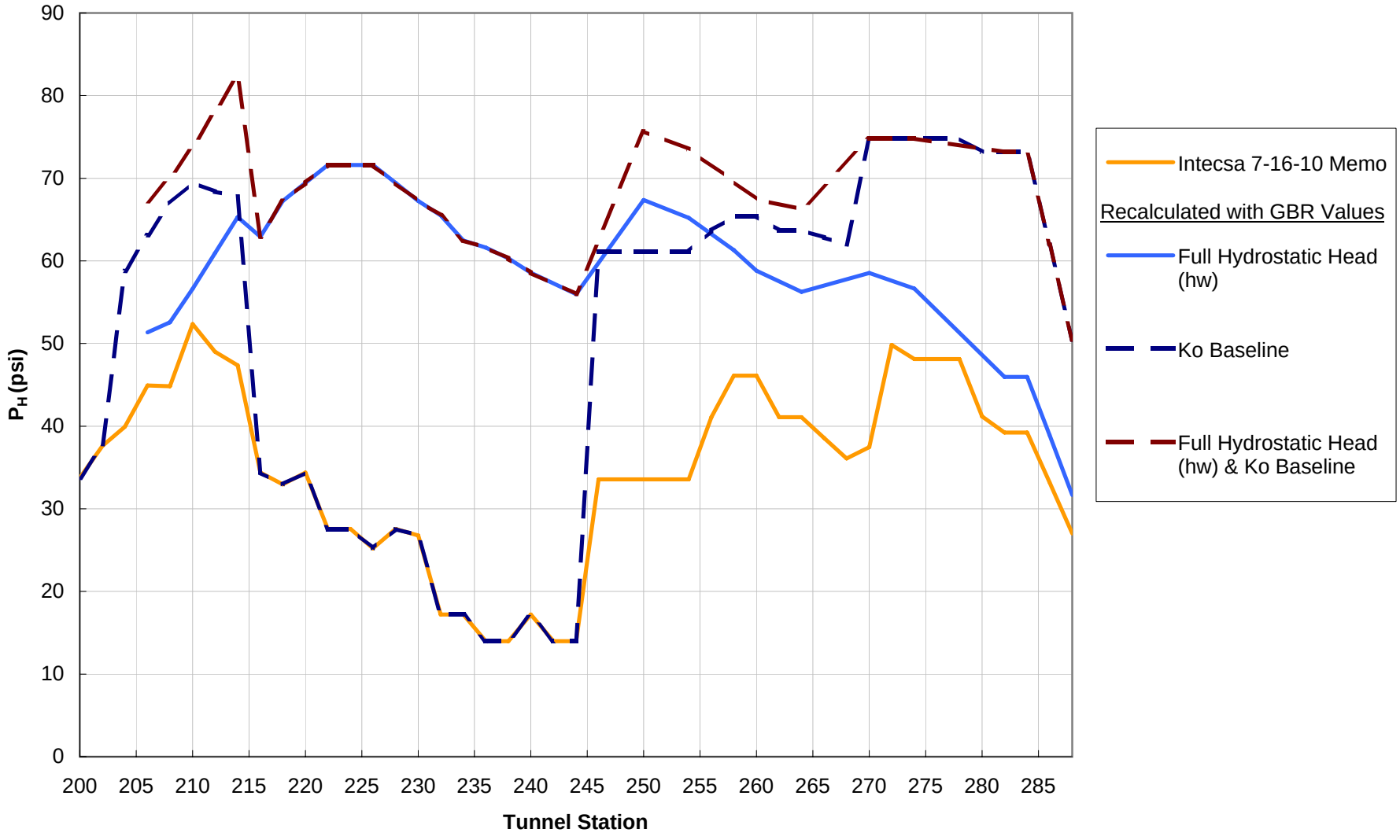

Face Pressure Calculations Reproduced From Intecsa's July 16, 2010 Memo

ESU	Station	H (feet)	h_w (feet)	H* (feet)	Soil Type	γ_N (pcf)	ϕ (°)	ϕ_{sat} (°)	Sat? Y/N	K_o Baseline	OCR Empirical	K_o NC - Empirical	α 0.46±0.06	K_o OC - Empirical	K_a	K_{calc}	P_V (psi)	P_H (psi)	$P_{H\ max}$ (psi)	$P_{H\ min}$ (psi)
2	200 + 00	58.1	39.4	58	GRANULAR	125	33	30	Y	0.5		0.50	0.5	0.50	0.33	0.50	50	33.75	40.50	30.38
2	202 + 00	67.0	39.4	67	GRANULAR	125	33	30	Y	0.5		0.50	0.5	0.50	0.33	0.50	58	37.62	45.14	33.85
5	204 + 00	75.9	45.9	76	GRANULAR	130	39	36	Y	0.8	2	0.41	0.5	0.41	0.26	0.41	69	39.94	47.92	35.94
5	206 + 00	80.3	59.1	80	GRANULAR	130	39	36	Y	0.8	2	0.41	0.5	0.41	0.26	0.41	72	44.94	53.92	40.44
5	208 + 00	91.4	49.2	87	GRANULAR	130	39	36	Y	0.8	2	0.41	0.5	0.41	0.26	0.41	78	44.83	53.80	40.35
5	210 + 00	102.6	78.7	87	GRANULAR	130	39	36	Y	0.8	2	0.41	0.5	0.41	0.26	0.41	78	52.35	62.82	47.11
5	212 + 00	104.8	65.6	87	GRANULAR	130	39	36	Y	0.8	2	0.41	0.5	0.41	0.26	0.41	78	49.01	58.81	44.11
5	214 + 00	111.4	59.1	87	GRANULAR	130	39	36	Y	0.8	2	0.41	0.5	0.41	0.26	0.41	78	47.35	56.82	42.62
7	216 + 00	122.6	59.1	48	COHESIVE	120	25	22	Y	1.4	5	0.63	0.5	1.56	0.45	0.45	45	34.37	41.25	30.93
7	218 + 00	129.2	55.8	48	COHESIVE	120	25	22	Y	1.4	5	0.63	0.5	1.56	0.45	0.45	43	32.94	39.53	29.65
7	220 + 00	133.7	59.1	48	COHESIVE	120	25	22	Y	1.4	5	0.63	0.5	1.56	0.45	0.45	45	34.37	41.25	30.93
7	222 + 00	142.6	39.4	48	COHESIVE	120	25	22	Y	1.4	5	0.63	0.5	1.56	0.45	0.45	40	27.56	33.07	24.80
7	224 + 00	147.0	39.4	48	COHESIVE	120	25	22	Y	1.4	5	0.63	0.5	1.56	0.45	0.45	40	27.56	33.07	24.80
7	226 + 00	149.2	29.5	48	COHESIVE	120	25	22	Y	1.4	5	0.63	0.5	1.56	0.45	0.45	40	25.22	30.26	22.70
7	228 + 00	149.2	39.4	48	COHESIVE	120	25	22	Y	1.4	5	0.63	0.5	1.56	0.45	0.45	40	27.56	33.07	24.80
7	230 + 00	142.6	36.1	48	COHESIVE	120	25	22	Y	1.4	5	0.63	0.5	1.56	0.45	0.45	40	26.78	32.13	24.10
4	232 + 00	180.3	19.7	43	COHESIVE	145	40	37	Y	0.6	2	0.40	0.5	0.40	0.25	0.25	43	17.20	20.64	15.48
4	234 + 00	187.0	19.7	43	COHESIVE	145	40	37	Y	0.6	2	0.40	0.5	0.40	0.25	0.25	43	17.20	20.64	15.48
4	236 + 00	193.7	9.8	43	COHESIVE	145	40	37	Y	0.6	2	0.40	0.5	0.40	0.25	0.25	43	13.98	16.77	12.58
4	238 + 00	202.6	9.8	43	COHESIVE	145	40	37	Y	0.6	2	0.40	0.5	0.40	0.25	0.25	43	13.98	16.77	12.58
4	240 + 00	213.7	19.7	43	COHESIVE	145	40	37	Y	0.6	3	0.40	0.5	0.60	0.25	0.25	43	17.20	20.64	15.48
4	242 + 00	220.3	9.8	43	COHESIVE	145	40	37	Y	0.6	3	0.40	0.5	0.60	0.25	0.25	43	13.98	16.77	12.58
4	244 + 00	227.0	9.8	43	COHESIVE	145	40	37	Y	0.6	3	0.40	0.5	0.60	0.25	0.25	43	13.98	16.77	12.58
5-6	246 + 00	233.7	9.8	87	GRANULAR	125	39	36	Y	0.8	2	0.41	0.5	0.41	0.26	0.41	75	33.55	40.27	30.20
5-6	248 + 00	233.7	9.8	87	GRANULAR	125	39	36	Y	0.8	2	0.41	0.5	0.41	0.26	0.41	75	33.55	40.27	30.20
5-6	250 + 00	233.7	9.8	87	GRANULAR	125	39	36	Y	0.8	2	0.41	0.5	0.41	0.26	0.41	75	33.55	40.27	30.20
5-6	252 + 00	242.6	9.8	87	GRANULAR	125	39	36	Y	0.8	2	0.41	0.5	0.41	0.26	0.41	75	33.55	40.27	30.20
5-6	254 + 00	238.1	9.8	87	GRANULAR	125	39	36	Y	0.8	2	0.41	0.5	0.41	0.26	0.41	75	33.55	40.27	30.20
5-6	256 + 00	231.4	39.4	87	GRANULAR	125	39	36	Y	0.8	2	0.41	0.5	0.41	0.26	0.41	75	41.09	49.31	36.98
5-6	258 + 00	220.3	59.1	87	GRANULAR	125	39	36	Y	0.8	2	0.41	0.5	0.41	0.26	0.41	75	46.11	55.33	41.50
5-6	260 + 00	204.8	59.1	87	GRANULAR	125	39	36	Y	0.8	2	0.41	0.5	0.41	0.26	0.41	75	46.11	55.33	41.50
5-6	262 + 00	193.7	39.4	87	GRANULAR	125	39	36	Y	0.8	2	0.41	0.5	0.41	0.26	0.41	75	41.09	49.31	36.98
5-6	264 + 00	180.3	39.4	87	GRANULAR	125	39	36	Y	0.8	2	0.41	0.5	0.41	0.26	0.41	75	41.09	49.31	36.98
5-6	266 + 00	169.2	29.5	87	GRANULAR	125	39	36	Y	0.8	2	0.41	0.5	0.41	0.26	0.41	75	38.57	46.29	34.72
5-6	268 + 00	160.3	19.7	87	GRANULAR	125	39	36	Y	0.8	2	0.41	0.5	0.41	0.26	0.41	75	36.08	43.29	32.47
5-8	270 + 00	153.7	29.5	86	GRANULAR	125	40	37	Y	1.0	2	0.40	0.5	0.40	0.25	0.40	75	37.48	44.97	33.73
5-8	272 + 00	147.0	29.5	86	GRANULAR	125	40	37	Y	1.0	3	0.40	0.5	0.60	0.25	0.60	75	49.82	59.79	44.84
5-8	274 + 00	138.1	19.7	86	GRANULAR	125	40	37	Y	1.0	3	0.40	0.5	0.60	0.25	0.60	75	48.11	57.74	43.30
5-8	276 + 00	129.2	19.7	86	GRANULAR	125	40	37	Y	1.0	3	0.40	0.5	0.60	0.25	0.60	75	48.11	57.74	43.30
5-8	278 + 00	122.6	19.7	86	GRANULAR	125	40	37	Y	1.0	3	0.40	0.5	0.60	0.25	0.60	75	48.11	57.74	43.30
5-8	280 + 00	113.7	9.8	84	GRANULAR	125	40	37	N	1.0	3	0.36	0.5	0.54	0.22	0.54	73	41.19	49.42	37.07
5-8	282 + 00	98.1	0	84	GRANULAR	125	40	37	N	1.0	3	0.36	0.5	0.54	0.22	0.54	73	39.22	47.06	35.29
5-8	284 + 00	84.8	0	84	GRANULAR	125	40	37	N	1.0	3	0.36	0.5	0.54	0.22	0.54	73	39.22	47.06	35.29
5-8	286 + 00	71.4	0	71	GRANULAR	125	40	37	N	1.0	3	0.36	0.5	0.54	0.22	0.54	62	33.21	39.85	29.89
5-8	288 + 00	58.1	0	58	GRANULAR	125	40	37	N	1.0	3	0.36	0.5	0.54	0.22	0.54	50	27.02	32.43	24.32
																	Max	52.3	62.8	

D (feet)	γ_w (pcf)
57.5	62.4

Face Pressure Calculations Using Full Hydrostatic Head (h_w) From GBR

ESU	Station	H (feet)	h_w (feet)	H* (feet)	Soil Type	γ_N (pcf)	ϕ (°)	ϕ_{sat} (°)	Sat? Y/N	K_o Baseline	OCR Empirical	K_o NC - Empirical	K_o OC - Empirical	K_a	K_{calc}	P_V (psi)	P_H (psi)	$P_{H\ max}$ (psi)	$P_{H\ min}$ (psi)
5	206 + 00	80.3	85.5	80.3	GRANULAR	130	39	36	Y	0.8	2	0.41	0.38	0.26	0.38	74.7	51.3	61.6	46.2
5	208 + 00	91.4	85	86.8	GRANULAR	130	39	36	Y	0.8	2	0.41	0.38	0.26	0.38	78.4	52.6	63.1	47.3
5	210 + 00	102.6	95	86.8	GRANULAR	130	39	36	Y	0.8	2	0.41	0.38	0.26	0.38	81.9	56.6	67.9	51.0
5	212 + 00	104.8	105	86.8	GRANULAR	130	39	36	Y	0.8	2	0.41	0.38	0.26	0.38	86.2	61.0	73.1	54.9
5	214 + 00	111.4	115	86.8	GRANULAR	130	39	36	Y	0.8	2	0.41	0.38	0.26	0.38	90.6	65.3	78.3	58.8
7	216 + 00	122.6	125	48.1	COHESIVE	120	25	22	Y	1.4	5	0.63	1.54	0.45	0.45	73.4	62.9	75.5	56.6
7	218 + 00	129.2	135	48.1	COHESIVE	120	25	22	Y	1.4	5	0.63	1.54	0.45	0.45	77.8	67.3	80.7	60.5
7	220 + 00	133.7	140	48.1	COHESIVE	120	25	22	Y	1.4	5	0.63	1.54	0.45	0.45	79.9	69.4	83.3	62.5
7	222 + 00	142.6	145	48.1	COHESIVE	120	25	22	Y	1.4	5	0.63	1.54	0.45	0.45	82.1	71.6	85.9	64.4
7	224 + 00	147.0	145	48.1	COHESIVE	120	25	22	Y	1.4	5	0.63	1.54	0.45	0.45	82.1	71.6	85.9	64.4
7	226 + 00	149.2	145	48.1	COHESIVE	120	25	22	Y	1.4	5	0.63	1.54	0.45	0.45	82.1	71.6	85.9	64.4
7	228 + 00	149.2	140	48.1	COHESIVE	120	25	22	Y	1.4	5	0.63	1.54	0.45	0.45	79.9	69.4	83.3	62.5
7	230 + 00	142.6	135	48.1	COHESIVE	120	25	22	Y	1.4	5	0.63	1.54	0.45	0.45	77.8	67.3	80.7	60.5
4	232 + 00	180.3	137	43.1	COHESIVE	145	40	37	Y	0.6	2	0.40	0.42	0.25	0.25	84.1	65.5	78.6	59.0
4	234 + 00	187.0	130	43.1	COHESIVE	145	40	37	Y	0.6	2	0.40	0.42	0.25	0.25	81.0	62.5	75.0	56.2
4	236 + 00	193.7	128	43.1	COHESIVE	145	40	37	Y	0.6	2	0.40	0.42	0.25	0.25	80.2	61.6	73.9	55.4
4	238 + 00	202.6	125	43.1	COHESIVE	145	40	37	Y	0.6	2	0.40	0.42	0.25	0.25	78.9	60.3	72.4	54.3
4	240 + 00	213.7	121	43.1	COHESIVE	145	40	37	Y	0.6	2	0.40	0.42	0.25	0.25	77.1	58.6	70.3	52.7
4	244 + 00	227.0	115	43.1	COHESIVE	145	40	37	Y	0.6	2	0.40	0.42	0.25	0.25	74.5	56.0	67.2	50.4
5-6	250 + 00	233.7	105	86.8	GRANULAR	125	39	36	Y	0.8	3	0.41	0.58	0.26	0.58	83.2	67.4	80.9	60.6
5-6	254 + 00	238.1	100	86.8	GRANULAR	125	39	36	Y	0.8	3	0.41	0.58	0.26	0.58	81.1	65.2	78.3	58.7
5-6	258 + 00	220.3	91	86.8	GRANULAR	125	39	36	Y	0.8	3	0.41	0.58	0.26	0.58	77.2	61.3	73.6	55.2
5-6	260 + 00	204.8	83	86.8	GRANULAR	125	39	36	Y	0.8	3	0.41	0.58	0.26	0.58	75.3	58.8	70.6	52.9
5-6	264 + 00	180.3	69	86.8	GRANULAR	125	39	36	Y	0.8	3	0.41	0.58	0.26	0.58	75.3	56.3	67.5	50.6
5-8	270 + 00	153.7	47.5	86.2	GRANULAR	125	40	37	Y	1.0	4	0.40	0.70	0.25	0.70	74.8	58.5	70.2	52.7
5-8	274 + 00	138.1	33	86.2	GRANULAR	125	40	37	Y	1.0	4	0.40	0.70	0.25	0.70	74.8	56.7	68.0	51.0
5-8	282 + 00	98.1	0	84.3	GRANULAR	125	40	37	N	1.0	4	0.36	0.63	0.22	0.63	73.2	46.0	55.2	41.4
5-8	284 + 00	84.8	0	84.3	GRANULAR	125	40	37	N	1.0	4	0.36	0.63	0.22	0.63	73.2	46.0	55.2	41.4
5-8	286 + 00	71.4	0	71.4	GRANULAR	125	40	37	N	1.0	4	0.36	0.63	0.22	0.63	62.0	38.9	46.7	35.0
5-8	288 + 00	58.1	0	58.1	GRANULAR	125	40	37	N	1.0	4	0.36	0.63	0.22	0.63	50.4	31.7	38.0	28.5
																Max	71.6	85.9	

D (feet)	γ_W (pcf)
57.5	62.4

Face Pressure Calculations Using At-Rest Lateral Earth Pressure Coefficient (K_o) From GBR

ESU	Station	H (feet)	h_w (feet)	H* (feet)	Soil Type	γ_N (pcf)	ϕ (°)	ϕ_{sat} (°)	Sat? Y/N	K_o Baseline	K_a	K_{calc}	P_V (psi)	P_H (psi)	$P_{H\ max}$ (psi)	$P_{H\ min}$ (psi)
2	200 + 00	58.1	39.4	58.1	GRANULAR	125	33	30	Y	0.5	0.33	0.50	50.4	33.8	40.5	30.4
2	202 + 00	67.0	39.4	67.0	GRANULAR	125	33	30	Y	0.5	0.33	0.50	58.2	37.6	45.1	33.9
5	204 + 00	75.9	45.9	75.9	GRANULAR	130	39	36	Y	0.8	0.26	0.80	68.5	58.8	70.6	52.9
5	206 + 00	80.3	59.1	80.3	GRANULAR	130	39	36	Y	0.8	0.26	0.80	72.5	63.1	75.7	56.8
5	208 + 00	91.4	49.2	86.8	GRANULAR	130	39	36	Y	0.8	0.26	0.80	78.4	67.0	80.3	60.3
5	210 + 00	102.6	78.7	86.8	GRANULAR	130	39	36	Y	0.8	0.26	0.80	78.4	69.5	83.4	62.6
5	212 + 00	104.8	65.6	86.8	GRANULAR	130	39	36	Y	0.8	0.26	0.80	78.4	68.4	82.0	61.5
5	214 + 00	111.4	59.1	86.8	GRANULAR	130	39	36	Y	0.8	0.26	0.80	78.4	67.8	81.4	61.0
7	216 + 00	122.6	59.1	48.1	COHESIVE	120	25	22	Y	1.4	0.45	0.45	44.9	34.4	41.2	30.9
7	218 + 00	129.2	55.8	48.1	COHESIVE	120	25	22	Y	1.4	0.45	0.45	43.4	32.9	39.5	29.6
7	220 + 00	133.7	59.1	48.1	COHESIVE	120	25	22	Y	1.4	0.45	0.45	44.9	34.4	41.2	30.9
7	222 + 00	142.6	39.4	48.1	COHESIVE	120	25	22	Y	1.4	0.45	0.45	40.1	27.6	33.1	24.8
7	224 + 00	147.0	39.4	48.1	COHESIVE	120	25	22	Y	1.4	0.45	0.45	40.1	27.6	33.1	24.8
7	226 + 00	149.2	29.5	48.1	COHESIVE	120	25	22	Y	1.4	0.45	0.45	40.1	25.2	30.3	22.7
7	228 + 00	149.2	39.4	48.1	COHESIVE	120	25	22	Y	1.4	0.45	0.45	40.1	27.6	33.1	24.8
7	230 + 00	142.6	36.1	48.1	COHESIVE	120	25	22	Y	1.4	0.45	0.45	40.1	26.8	32.1	24.1
4	232 + 00	180.3	19.7	43.1	COHESIVE	145	40	37	Y	0.6	0.25	0.25	43.4	17.2	20.6	15.5
4	234 + 00	187.0	19.7	43.1	COHESIVE	145	40	37	Y	0.6	0.25	0.25	43.4	17.2	20.6	15.5
4	236 + 00	193.7	9.8	43.1	COHESIVE	145	40	37	Y	0.6	0.25	0.25	43.4	14.0	16.8	12.6
4	238 + 00	202.6	9.8	43.1	COHESIVE	145	40	37	Y	0.6	0.25	0.25	43.4	14.0	16.8	12.6
4	240 + 00	213.7	19.7	43.1	COHESIVE	145	40	37	Y	0.6	0.25	0.25	43.4	17.2	20.6	15.5
4	242 + 00	220.3	9.8	43.1	COHESIVE	145	40	37	Y	0.6	0.25	0.25	43.4	14.0	16.8	12.6
4	244 + 00	227.0	9.8	43.1	COHESIVE	145	40	37	Y	0.6	0.25	0.25	43.4	14.0	16.8	12.6
5-6	246 + 00	233.7	9.8	86.8	GRANULAR	125	39	36	Y	0.8	0.26	0.80	75.3	61.1	73.4	55.0
5-6	248 + 00	233.7	9.8	86.8	GRANULAR	125	39	36	Y	0.8	0.26	0.80	75.3	61.1	73.4	55.0
5-6	250 + 00	233.7	9.8	86.8	GRANULAR	125	39	36	Y	0.8	0.26	0.80	75.3	61.1	73.4	55.0
5-6	252 + 00	242.6	9.8	86.8	GRANULAR	125	39	36	Y	0.8	0.26	0.80	75.3	61.1	73.4	55.0
5-6	254 + 00	238.1	9.8	86.8	GRANULAR	125	39	36	Y	0.8	0.26	0.80	75.3	61.1	73.4	55.0
5-6	256 + 00	231.4	39.4	86.8	GRANULAR	125	39	36	Y	0.8	0.26	0.80	75.3	63.7	76.4	57.3
5-6	258 + 00	220.3	59.1	86.8	GRANULAR	125	39	36	Y	0.8	0.26	0.80	75.3	65.4	78.5	58.9
5-6	260 + 00	204.8	59.1	86.8	GRANULAR	125	39	36	Y	0.8	0.26	0.80	75.3	65.4	78.5	58.9
5-6	262 + 00	193.7	39.4	86.8	GRANULAR	125	39	36	Y	0.8	0.26	0.80	75.3	63.7	76.4	57.3
5-6	264 + 00	180.3	39.4	86.8	GRANULAR	125	39	36	Y	0.8	0.26	0.80	75.3	63.7	76.4	57.3
5-6	266 + 00	169.2	29.5	86.8	GRANULAR	125	39	36	Y	0.8	0.26	0.80	75.3	62.8	75.4	56.5
5-6	268 + 00	160.3	19.7	86.8	GRANULAR	125	39	36	Y	0.8	0.26	0.80	75.3	62.0	74.4	55.8
5-8	270 + 00	153.7	29.5	86.2	GRANULAR	125	40	37	Y	1.0	0.25	1.00	74.8	74.8	89.8	67.3
5-8	272 + 00	147.0	29.5	86.2	GRANULAR	125	40	37	Y	1.0	0.25	1.00	74.8	74.8	89.8	67.3
5-8	274 + 00	138.1	19.7	86.2	GRANULAR	125	40	37	Y	1.0	0.25	1.00	74.8	74.8	89.8	67.3
5-8	276 + 00	129.2	19.7	86.2	GRANULAR	125	40	37	Y	1.0	0.25	1.00	74.8	74.8	89.8	67.3
5-8	278 + 00	122.6	19.7	86.2	GRANULAR	125	40	37	Y	1.0	0.25	1.00	74.8	74.8	89.8	67.3
5-8	280 + 00	113.7	9.8	84.3	GRANULAR	125	40	37	N	1.0	0.22	1.00	73.2	73.2	87.8	65.9
5-8	282 + 00	98.1	0	84.3	GRANULAR	125	40	37	N	1.0	0.22	1.00	73.2	73.2	87.8	65.9
5-8	284 + 00	84.8	0	84.3	GRANULAR	125	40	37	N	1.0	0.22	1.00	73.2	73.2	87.8	65.9
5-8	286 + 00	71.4	0	71.4	GRANULAR	125	40	37	N	1.0	0.22	1.00	62.0	62.0	74.4	55.8
5-8	288 + 00	58.1	0	58.1	GRANULAR	125	40	37	N	1.0	0.22	1.00	50.4	50.4	60.5	45.4
													Max	74.8	89.8	

D (feet)	γ_w (pcf)
57.5	62.4

Face Pressure Calculations Using h_w and K_o From GBR

ESU	Station	H (feet)	h_w (feet)	H* (feet)	Soil Type	γ_N (pcf)	ϕ (°)	ϕ_{sat} (°)	Sat? Y/N	K_o Baseline	K_a	K_{calc}	P_V (psi)	P_H (psi)	$P_{H\ max}$ (psi)	$P_{H\ min}$ (psi)
5	206 + 00	80.3	85.5	80.3	GRANULAR	130	39	36	Y	0.8	0.26	0.80	74.7	67.2	80.6	60.5
5	208 + 00	91.4	85	86.8	GRANULAR	130	39	36	Y	0.8	0.26	0.80	78.4	70.1	84.1	63.0
5	210 + 00	102.6	95	86.8	GRANULAR	130	39	36	Y	0.8	0.26	0.80	81.9	73.8	88.5	66.4
5	212 + 00	104.8	105	86.8	GRANULAR	130	39	36	Y	0.8	0.26	0.80	86.2	78.1	93.7	70.3
5	214 + 00	111.4	115	86.8	GRANULAR	130	39	36	Y	0.8	0.26	0.80	90.6	82.4	98.9	74.2
7	216 + 00	122.6	125	48.1	COHESIVE	120	25	22	Y	1.4	0.45	0.45	73.4	62.9	75.5	56.6
7	218 + 00	129.2	135	48.1	COHESIVE	120	25	22	Y	1.4	0.45	0.45	77.8	67.3	80.7	60.5
7	220 + 00	133.7	140	48.1	COHESIVE	120	25	22	Y	1.4	0.45	0.45	79.9	69.4	83.3	62.5
7	222 + 00	142.6	145	48.1	COHESIVE	120	25	22	Y	1.4	0.45	0.45	82.1	71.6	85.9	64.4
7	224 + 00	147.0	145	48.1	COHESIVE	120	25	22	Y	1.4	0.45	0.45	82.1	71.6	85.9	64.4
7	226 + 00	149.2	145	48.1	COHESIVE	120	25	22	Y	1.4	0.45	0.45	82.1	71.6	85.9	64.4
7	228 + 00	149.2	140	48.1	COHESIVE	120	25	22	Y	1.4	0.45	0.45	79.9	69.4	83.3	62.5
7	230 + 00	142.6	135	48.1	COHESIVE	120	25	22	Y	1.4	0.45	0.45	77.8	67.3	80.7	60.5
4	232 + 00	180.3	137	43.1	COHESIVE	145	40	37	Y	0.6	0.25	0.25	84.1	65.5	78.6	59.0
4	234 + 00	187.0	130	43.1	COHESIVE	145	40	37	Y	0.6	0.25	0.25	81.0	62.5	75.0	56.2
4	236 + 00	193.7	128	43.1	COHESIVE	145	40	37	Y	0.6	0.25	0.25	80.2	61.6	73.9	55.4
4	238 + 00	202.6	125	43.1	COHESIVE	145	40	37	Y	0.6	0.25	0.25	78.9	60.3	72.4	54.3
4	240 + 00	213.7	121	43.1	COHESIVE	145	40	37	Y	0.6	0.25	0.25	77.1	58.6	70.3	52.7
4	244 + 00	227.0	115	43.1	COHESIVE	145	40	37	Y	0.6	0.25	0.25	74.5	56.0	67.2	50.4
5-6	250 + 00	233.7	105	86.8	GRANULAR	125	39	36	Y	0.8	0.26	0.80	83.2	75.7	90.8	68.1
5-6	254 + 00	238.1	100	86.8	GRANULAR	125	39	36	Y	0.8	0.26	0.80	81.1	73.5	88.2	66.2
5-6	258 + 00	220.3	91	86.8	GRANULAR	125	39	36	Y	0.8	0.26	0.80	77.2	69.6	83.5	62.7
5-6	260 + 00	204.8	83	86.8	GRANULAR	125	39	36	Y	0.8	0.26	0.80	75.3	67.5	81.0	60.7
5-6	264 + 00	180.3	69	86.8	GRANULAR	125	39	36	Y	0.8	0.26	0.80	75.3	66.3	79.5	59.6
5-8	270 + 00	153.7	47.5	86.2	GRANULAR	125	40	37	Y	1.0	0.25	1.00	74.8	74.8	89.8	67.3
5-8	274 + 00	138.1	33	86.2	GRANULAR	125	40	37	Y	1.0	0.25	1.00	74.8	74.8	89.8	67.3
5-8	282 + 00	98.1	0	84.3	GRANULAR	125	40	37	N	1.0	0.22	1.00	73.2	73.2	87.8	65.9
5-8	284 + 00	84.8	0	84.3	GRANULAR	125	40	37	N	1.0	0.22	1.00	73.2	73.2	87.8	65.9
5-8	286 + 00	71.4	0	71.4	GRANULAR	125	40	37	N	1.0	0.22	1.00	62.0	62.0	74.4	55.8
5-8	288 + 00	58.1	0	58.1	GRANULAR	125	40	37	N	1.0	0.22	1.00	50.4	50.4	60.5	45.4
													Max	82.4	98.9	

D (feet)	γ_w (pcf)
57.5	62.4

MEMORANDUM

DATE: August 17, 2010

TO: Richard Johnson, PE, HNTB

FROM: Michael Bailey, PE, Hart Crowser, Inc. and Scott Bender, LHG and CGWP, Bender Consulting, LLC

RE: **Additional Exploration Recommendations, Alaskan Way Tunnel (SR 99)**
17638-00

Based on review of geotechnical and hydrogeologic information provided by WSDOT, we recommend that the STP plan to drill additional borings and install groundwater monitoring instrumentation as part of final design for the tunnel.

1. Two borings should be drilled and sampled, and multi-level vibrating wire piezometers installed to refine the "window" of relatively impermeable glacial till (unit Qpgt) and the presence of relatively permeable outwash sands and gravels (unit Qpgo) around STA 190+00. Information provided by WSDOT indicates the Qpgt soil unit is discontinuous, in part due to extrapolation from borings west of the proposed open cut excavation. Since the Qpgt will provide a lower hydraulic cutoff for the excavation, the unknown extent of this window results in significant uncertainty on the amount of dewatering that will be needed in the base of this excavation. The geometry of the window also will determine the requirements for groundwater recharge outside the excavation to limit ground surface settlement. Information from the two new proposed borings would be helpful in refining dewatering and recharge requirements as well as settlement projections. The borings should be about 90 feet deep.

2. We recommend that one boring be drilled, sampled, and completed with groundwater instrumentation at the South Portal. The existing geotechnical data indicates the presence of a deep sand unit (Qpnf) beneath the tunnel at about elevation –95 feet. The soil profile in the GBR and boring logs and cross sections indicate that this unit happens to end at the junction between the tunnel and South Portal excavation. If that unit were to continue beneath the excavation, then the factor of safety for the excavation base stability would be less than one, and could require deep depressurization. We recommend a boring to a minimum depth of 150 feet and multi-level vibrating wire piezometers to evaluate the presence of the deep sand.

A deep boring for groundwater monitoring is recommended even if the south portal is shifted 300 to 500 feet further south (the little box concept). This is because most of the WSDOT borings in that area terminate at an elevation of about –80 feet. Although shifting the start of the tunnel farther south would reduce the depth of excavation required for the open cut section, the potential for deeper groundwater pressure to cause instability of the base of the excavation would remain. An additional deep boring with multi-level vibrating wire piezometers would reduce the risk of unanticipated groundwater conditions in this area.

J:\Jobs\1763800\Additional GW data memo 8 17 10.doc

MEMORANDUM

DATE: August 17, 2010

TO: Richard Johnson, PE, HNTB

FROM: Michael Bailey, PE, Hart Crowser, Inc. and Scott Bender, LHG and CGWP, Bender Consulting, LLC

RE: **SR 99 Alaskan Way Tunnel Construction Estimated Groundwater Inflow Rates**
17638-00

In response to your request, this memo provides estimated groundwater inflow rates during construction of the proposed SR 99 Alaskan Way Bored Tunnel project. This memo replaces a draft memo sent on August 12, 2010. The information developed by the STP's dewatering consultant, Mr. Scott Bender, and transmitted to us via letter and e-mail is summarized below.

There are five more or less distinct sources of groundwater that will need to be managed during construction:

- Seepage into the south portal open cut;
- Seepage through the face of the TBM bore;
- Groundwater from dewatering the tunnel face during maintenance intervention;
- Seepage through the precast lining segments; and
- Seepage into the north portal open cut excavation.

The flow rate for each of these sources cannot be precisely estimated in most cases, since it will depend on variations in local geology and the means and methods of construction. The ranges of estimated flow rates are discussed below.

1700 Westlake Avenue North, Suite 200
Seattle, Washington 98109-6212
Fax 206.328.5581
Tel 206.324.9530

ANTICIPATED GROUNDWATER SEEPAGE RATES

South Portal Open Cut

Dewatering the south portal excavation is discussed in Scott Benders' July 13 memo to Jerry Dorn at HNTB, copy attached. We understand ground support for the south portal open cut will be provided by secant pile walls on the east and west sides, which will allow very little lateral groundwater seepage.

The north end of the south portal excavation at the start of the tunnel bore (assumed Station 199+08 = Station 200+00) consists of highly permeable, clean to silty sands and gravels (former beach deposits and glacial outwash) overlying relatively impermeable glacial till and glacially overridden silts and clays, below about –30 feet in elevation. We anticipate the north face of the excavation will be supported by means such as fiberglass soil nails and shotcrete that the TBM can advance through, and that the upper sand and gravel soils will be stabilized by jet grouting prior to excavating the portal area. [Note that the same general conditions (relatively permeable sands and gravels overlying relatively impermeable soils) would be encountered if the start of tunneling is shifted up to about 300 feet to the south. However, south of about Station 196+00, the top of the glacially overridden soils is somewhat deeper, and additional relatively permeable outwash soils would be encountered]. Assuming the relatively permeable soils on the north side of the portal excavation are improved by jet grouting, resultant groundwater seepage is likely to be minor.

Groundwater seepage will also occur through relatively permeable outwash and fill above the glacial soils in the south end of the open cut excavation, unless cutoff walls or suitable ground improvement (e.g., jet grouting) is accomplished. Cutoff walls could consist of secant pile walls, slurry walls or possibly sheet piles.

Given lateral groundwater cutoff by shoring systems along the excavation side walls and at the ends of the excavation, seepage through the base of the excavation is estimated to vary along the length of the open cut as described in the attached memo. The estimated inflow range is less than 5 gallons per minute (gpm) per 100 feet of excavation. For the area between about STA 188+00 to 191+00, there will not be an underlying aquitard to cut off seepage into the excavation. In this area, dewatering will need to be performed to control excavation basal stability. The total dewatering rates are estimated to be between about 40 to 120 gpm, but could be as high as 220 gpm as described in the attached memo. Recharge will be needed outside the excavation; since the dewatering effluent will be needed for recharge, the total system discharge rate to the sewer will be less than the rates presented above.

Seepage through the Face of the Advancing TBM

Seepage through the TBM will vary depending on soil conditions along the alignment, as well as the type of TBM (EPB or slurry) and method of operation. The estimated seepage rates presented below for tunnel intervention represent an upper bound, since a considerable amount of groundwater during normal tunneling is anticipated to be part of the moisture content of the tunnel spoils as the TBM advances. This moisture content will be affected by the type of slurry or the soil conditioners used for the EPB TBM. Seepage in excess of the moisture content of the excavated soils will depend in part on the face pressure of the TBM.

Groundwater Management during Maintenance intervention

In the event tunnel boring is stopped for maintenance, referred to as a maintenance intervention, seepage through the face of the tunnel can be controlled by closing the face. Dewatering, or depressurization with pumped wells will need to be accomplished if the face of the tunnel is accessed for the maintenance. Scott Bender estimated the volume of dewatering for different depths and ground conditions along the alignment, as summarized below.

Station	Invert Elev.	Well Depth	Discharge per well (gpm)	Total Discharge (gpm)
208+00	–100	210	30 - 80	240 - 640
214+00	–120	190	35 - 90	300 - 700
224+00	–150	230	200 - 250	1,600 - 2,000
244+00	–120	310	160 - 200	1,300 - 1,600
258+00	–90	300	175 - 380	1,400 - 3,000
271+00	–50	230	120 - 250	900 - 2,000

Although the tunnel face is mostly or entirely anticipated to be in clay and silt soils between about Stations 213+00 to 233+00, dewatering (or groundwater inflow) would still be an issue due to the proximity and sometimes direct hydraulic connection with the underlying sands.

Seepage through the Precast Lining

A tunnel liner consisting of precast concrete segments will be installed as the TBM advances. Some seepage through the liner segments is possible since the segments do not always fit tightly and/or the edges may be damaged during installation. However on most tunnels, this is typically reported to be a negligible source of seepage. Potential seepage through the liner segments would be further reduced where grouting is accomplished to fill the annular void left by the tail of the TBM shield, which is anticipated to occur along the entire alignment.

North Portal Open Cut

The regional groundwater table is below the bottom of the proposed excavation at the north portal, but the open cut excavation is anticipated to encounter local perched water zones. Seepage from these zones may persist for a period of days to months, but are not likely to produce significant flow rates.

ENVIRONMENTAL CONSIDERATIONS FOR GROUNDWATER MANAGEMENT

Groundwater removed from excavations is likely to become turbid during construction, and require settling pretreatment to remove suspended solids prior to discharge. Treatment could also be required where Portland cement or bentonite slurry contaminates groundwater and raises the pH. The extent of this condition can generally be controlled via construction means and methods. Elevated pH is unlikely to be a disposal issue for groundwater that is not impacted by alkaline materials (e.g., Portland cement) during construction.

South Portal Open Cut

Groundwater from the south portal excavation is described in WSDOT's Environmental Baseline Report (EBR) as having contaminants consisting of petroleum hydrocarbons, other gasoline-related constituents (BETX), metals and other organic chemicals, referred to as carcinogenic PAHs (cPAHs). The EBR indicates these concentrations were occasionally above levels allowed for discharge into the King County METRO sewer, but below state cleanup levels (MTCA Method A).

The EBR states: "For project bidding purposes, all dewatering fluids should be considered contaminated and will require treatment prior to discharge." Despite this, Hart Crowser does not anticipate groundwater from the South Portal excavation will likely need to be treated, except for control of suspended solids or turbidity, prior to sewer discharge, based on the following:

1. King County Industrial Waste Program (KCIWP) discharge limits are shown below. Site-specific discharge authorization requirements may vary. As shown, all metals discharge criteria are in the ppm level (less than 1,000 ppb) except cadmium and mercury. Therefore, unless cadmium concentrations above 500 ppb or mercury above 100 ppb is present in the groundwater to be discharged, it will not require pretreatment.

Parameter	Instantaneous Maximum (ug/L - ppb)	Daily Average (ug/L - ppb)
Arsenic	4000	1000
Cadmium	600	500
Chromium	5000	2750
Copper	8000	3000
Lead	4000	2000
Mercury	200	100
Nickel	5000	2500
Silver	3000	1000
Zinc	10000	5000
Cyanide	3000	2000
Benzene	70	NA
Toluene	1400	NA
Ethylbenzene	1700	NA
FOG	NA	100,000

2. As shown in the table above, KCIWP measures petroleum products as "fats, oils, and grease" (FOG) and has a discharge limit of 100 mg/l (ppm). Therefore, based on the assumption that petroleum contaminants will be in the ppb range (less than 1,000 ppb), it is not likely that the groundwater will require pretreatment.

3. Typical Major Discharge Authorizations issued by KCIWP do not have discharge criteria for cPAHs. Therefore, it is not likely that groundwater would require pretreatment for cPAHs prior to discharge.

Based on the analysis outlined above, groundwater is unlikely to require treatment (other than to control suspended solids or for construction-induced contamination like excess pH) prior to discharge into the METRO sewer.

Based on recent experience with utility relocation projects for the Alaskan Way Viaduct, treatment for groundwater reinjection to control settlement may not be required. Ecology's policy on those projects dictated that any dewatering discharge used for reinjection could not be treated, even for settleable solids. If some form of treatment was performed (such as for settleable solids), then the reinjection water would have to be treated to groundwater standards. The potential contamination issues for those projects were minor, and the groundwater control requirements were for relatively shallow excavations in fill. Since the dewatering and groundwater recharge systems envisioned for the South Portal are for deeper glacial soils, we believe it is likely that this same non-treatment

policy will be required by Ecology. However, since concentrations of some metals in groundwater in the south portal area exceed surface water protection standards, the STP should seek clarification from Ecology, if possible, prior to bid submittal.

Groundwater Encountered During Tunneling

Groundwater encountered during tunneling will typically be in confined aquifers that make it unlikely there will be any preexisting contamination that affects water management. The CJV will need to consider the properties of potential slurry additives or spoil conditioners used during tunneling, but this is also unlikely to cause contamination. Disposal of groundwater from the tunnel is unlikely to have environmental issues other than turbidity, and possibly pH. pH may be a problem where Portland cement grout is installed and becomes mixed with the spoils, but is unlikely to affect seepage into the tunnel where the use of grout is confined to areas behind the face of the TBM.

North Portal Open Cut

Perched groundwater at the north portal area has petroleum hydrocarbon and other organic contaminants (notably chlorinated solvents) at concentrations that would likely require treatment prior to discharge to groundwater or the sewer. Some potential exists that concentrations measured in the exploratory borings would be diluted where contaminated groundwater would be combined during dewatering with uncontaminated groundwater.

Attachments: July 13, 2010 Memorandum from Scott Bender.

MEMORANDUM

BENDER
CONSULTING, LLC
Applied Groundwater Solutions

PMB 154
1992 South Elger Bay Road
Camano Island, WA 98282

ph 360 631 5600
cell 425 894 8943

scott@benderllc.com
www.benderllc.com

To: Jerry Dorn, HNTB

From: Scott Bender

CC: Garry Horvitz, Hart Crowser

Date: July 13, 2010

RE: SOUTH PORTAL ALASKAN WAY TUNNEL DEWATERING FEASIBILITY ASSESMENT

This memorandum provides a preliminary feasibility assessment of dewatering along the south portal excavations for the proposed Alaskan Way Tunnel. This assessment evaluates the dewatering requirements generally between STA 184+00 and 199+08, which is proposed as an open cut excavation.

The current design approach calls for secant or slurry walls along the alignment. For most of the alignment, these walls will imbed into Qpgl, Qpgm, or Qpgt soils. These soil types exhibit very low permeabilities as they consist or either silt, or very dense sand and gravel in a silt matrix. They are regarded as aquitards in the Pacific Northwest. Secant and slurry walls are also considered and have proven to be low permeability barriers to groundwater flow. As such, where the walls penetrate into the aquitards discussed above, the excavation will be a relatively water-tight structure where seepage into the structure is minimal, and drawdown effects outside the structure are also minimal.

Seepage would occur into the excavation if the ends of the structure were left open. We recommend that the design include cutoff walls (secant, slurry walls, or possibly sheet piles) at the ends of the excavation. A wall would certainly be necessary at the tunnel portal. Depending on staging, one or more walls could be installed along the southern portions of the work.

For these areas we assume that temporary dewatering wells will be installed inside the excavation to remove groundwater trapped in storage. These wells could be located on 80 to 100 foot spacings along each of the wall. They would be temporary and would have no effect on drawdown outside of the excavation footprint. The wells could be removed, or they could be used for control and discharge of slow seepage that will naturally occur; they could also be used to collect and remove precipitation that accumulates in the basin.

Preliminary calculations have been performed to estimate seepage through the basal soils beneath the excavation. Seepage rates may be on the order of 1 to 2 gpm per every 100 lineal feet of the excavation. Seepage rates through the walls should be less.

There is one area along the excavation footprint where cutoff of groundwater by the shoring walls and basal soils will probably not occur: this is in the vicinity of STA 188+00 to 191+00. In this case the Qpgt/Qpgm soils may be absent, and groundwater will flow into the excavation, and destabilize subgrade, if not controlled from outwash (Qpgo) sand. Our experience with this unit in working at an adjacent site indicates that recharge to the Qpgo may be limited. Until further study is performed here we assume that it is laterally continuous and dewatering will be necessary. Preliminary calculations indicate that about 10 dewatering wells installed along the walls of the excavation can be used to control the deep groundwater pressures. This would consist of 5 wells installed on about 100 foot centers along each wall. Well discharge would be on the order of 3 to 10 gpm per well, but could be as high as 20 gpm per well. Refinement of these values will be performed in the near term.

If the dewatering system is installed as discussed above, groundwater recharge outside of the excavation will be necessary. Drawdown in the Qpgo aquifer will extend outside the excavation walls; this would lead to consolidation of the overlying silt and fill soils, and likely lead to adverse ground surface settlements. Analyses will be performed to address the feasibility of recharge and the number of wells, but at this time we would assume 20 recharge wells would be required. Recharge is feasible in these soil types.

This memorandum has provided our initial view on the groundwater control requirements for this area. While refinement of the design will be performed, it is our opinion that groundwater control requirements are relatively small, and the current excavation and shoring methods provide a good approach to constructing the basin.

Please let me know if you have any questions or comments.

MEMORANDUM

DATE: August 17, 2010

TO: Richard Johnson, PE, HNTB

FROM: Michael Bailey, PE, Hart Crowser, Inc. and Scott Bender, LHG and CGWP, Bender Consulting, LLC

RE: Recommendations for Subsurface Intervention Planning, SR 99 Bored Tunnel 17638-00

In response to your request, following are recommendations for the STP to consider for planning potential subsurface maintenance intervention(s) during construction of the AWT. These recommendations are based on Scott Bender's experience designing the dewatering systems for the contractor, and Hart Crowser's experience representing the cities of Lake Forest Park and Bothell for the two Brightwater TBM interventions.

1. An impermeable grout seal should be installed in the annular space between the tunnel lining segments and the native ground for a minimum recommended distance of 80 feet prior to the intervention site. Without this seal, groundwater will follow the annular space of the tunnel and will overwhelm the ability of dewatering wells to control the pressure heads. This recommendation is made regardless of the soil unit being bored through.

2. It is much better if the interventions are planned and sufficient time is available to design the dewatering system. A minimum of two borings will need to be drilled at each intervention site for the design of the groundwater control system. Multi-level piezometers will need to be installed in the borings. The piezometers will need to be connected to a telemetry system for evaluating static and intervention groundwater pressures.

3. A minimum of one test dewatering well must be installed to determine the hydraulics at the intervention site. A 24-hour pumping test should be performed prior to design. The information from the test will be used for the design of the dewatering system and for estimating system discharge rates which will be necessary for permitting.

4. If a surface groundwater control system (dewatering wells) is installed, then the system preferably would be tested prior to the TBM arrival. The TBM will affect ground and

1700 Westlake Avenue North, Suite 200
Seattle, Washington 98109-6212
Fax 206.328.5581
Tel 206.324.9530

hydraulic conditions and a baseline system performance test is required for troubleshooting, as necessary, during the intervention.

5. About six wells were used for the Brightwater sites; 8 to 12 wells would likely be a minimum for this bore, considering the diameter of the AWT, and the fact that some wells would likely be 20 to 30 feet back from the face on either side of the tunnel. More wells and closer well spacing will be needed in silt and clay soils than in sandy soils; non-uniform soil conditions will increase the potential number of wells needed

6. Plan for two months of system installation and testing. This does not include advance planning and permitting. On both of the Brightwater sites, there was a major effort involved in preparing submittals to address concerns of the City and property owners.

7. The drill rigs required for installing the wells require considerable space. On Brightwater, we had about a 70-foot by 30-foot footprint; more area would be required for the AWT considering the larger tunnel size.

8. Air rotary drilling is loud. Working hours could be limited.

9. Advance planning is critical, especially in the tight confines of the city. Existing utilities and structures will have a direct impact on the design of the system. Establishing advance agreements with authorities and locals will provide a great benefit during actual construction.

10. Installing drainage wells from within the tunnel requires special equipment. This is not likely to be a good option for the AWT, considering groundwater flow through the sandy soils anticipated along a considerable portion of the alignment. The high pressures require shutoff valves. The equipment available at Brightwater limited the diameter of the drainage well and the drilling equipment. The borehole must have suitable diameter to install a machine-cut well screen, a minimum of one inch, but ideally two inches or more in diameter. It must be of sufficient diameter get the tooling out of the hole under pressure, and it must also be of sufficient diameter so that a tool (such as a swab or jet) can be used to clean the well if it plugs.

DRAFT
Technical Memorandum
8/18/2010
SR 99 – Review of Intecsa's Tunnel Liner

Brief Description: Review the liner design and drawings produced by Intecsa in accordance with applicable requirements of the projects.

Objective: Provide a brief memo documenting HNTB's findings.

Brief Summary: The Intecsa's submittal lacks essential information that CJV will need to properly cost the tunnel liner and therefore can't be included in the proposal without further improvements.

In addition, Intecsa's submittal has shown that the tunnel liner has been designed using one simplistic section model with one optimistic loading condition, and no seismic design of any type has been performed. If the liner cost was based on this section design alone, it is possible that the cost for the bored tunnel would be underestimated.

Model and Loads: The 2-dimensional section model used by Intecsa is very simplistic in nature. Many factors, as outlined in TR 2.32.4.4.4.3, that may affect the design were not considered. Although it is unrealistic to analyze all these cases at the pre-award phase, some selected scenarios based on engineering judgment should be studied. The 2D model and preliminary design should be enhanced by including the following:

1. Varying overburden
2. Changing soil properties for unbalanced supports
3. Effects of liquefiable soil no ground improvements are to be carried out
4. Include the interior structures and live loads
5. Use load combination according to TR 2.32.4.4.4.5
6. Use compression only springs for ground-structure interaction
7. Fire hardening requirements
8. "Little-box" analysis of loads

STAAD output is now shown in text form. Need to show graphical representation for critical cases, bending moment diagram, normal force, etc. Need to address deformation of the ring for final loading condition.

Seismic Design: No seismic design was provided in Intecsa's design documents. Appendix B8 – Seismic Design Criteria requires extensive and sophisticated seismic analyses at the final design. Not looking into seismic design at pre-award phase could impose the design-build team significant risk. Some case studies done by others have shown that the seismic design did not govern the thickness of the liner, its applicability to SR 99 tunnel is questionable because geological and geotechnical conditions as well as design requirements are different from those case studies.

Seismic joints for the tunnels are sometimes required to accommodate large differential movements in any direction due to seismic event. The concern is whether the segment joints would pull apart causing a collapse of the lining system and whether the proposed joints can meet the performance goals for the 108-year and 2500-year return earthquakes. If special seismic joints are required, it will have significant cost implications and construction consequences even for periodic use along the tunnel. Such joint would most likely be located at significant changes of soil properties. Semi rigid or flexible joints between

elements may also be strengthened to carry seismic loads and to prevent catastrophic inundation, typically by using stressed or unstressed prestressing components across the joints or by using bearings and shear keys. Dowels will be used on the circumferential joint with bolts on the radial joints and each segment will have a single EPDM gasket.

To be able to properly design the joints for the seismic, longitudinal models would be needed to investigate the opening and closing of the joint. Soil-structure interactions need to be included in the model and loading will be in the form of expected ground movements along the length of the tunnel.

Liner Thickness: The ratio between the liner inside diameter and the thickness is 26.0 for the current design. This ratio is at the high end of the sample tunnels provided in Intecsa's design. The inside diameters of the sample tunnels range from 27.55 ft to 33.98 ft, comparing to 52 ft for the SR 99 tunnel. The inside diameter to thickness ratio range from 21.03 to 26.33, with an average of 23.78. A more comparable tunnel is the recently completed tunnel in Shanghai whose outer diameter is 49.2 ft, with an inside diameter to thickness ratio of 21.10. It appears that using a high ratio of 26 maybe risky considering geological conditions and seismic requirements for the SR 99 tunnel; especially the design of the liner now is based on extremely optimistic assumptions. As such, the thickness of the liner needs to be established by analysis, not empirical relationships.

Reinforcement and Joints: The selected reinforcement is not justified, the RFP documents only requires minimum reinforcement of 1% of the concrete volume, distributed equally between the intrados and extrados of the liner, and split between main reinforcement and secondary reinforcement. Intecsa's design report assumes all 1% as only main reinforcement. Minimum reinforcement requirement based on ACI and AASHTO need to be addressed.

Reinforcement distribution is not shown with enough clarity, this is needed to demonstrate the reinforcement requirements and yet satisfy basic geometrical requirements (enough space for grooves, drilling locators, grout holes, lifting holes, etc.), note minimum spacing requirements stated in the TR Section 2.32.4.4.4

Joint design, though stated within the document, need to be shown either in a sketch or in a special drawings, need to indicate the bolting system used, the number of bolts, length and location for each bolt. This information is also needed for costing purpose. Reinforcement at the joints for bursting and spalling need further development with sketches to demonstrate the load case that is designed. The nomenclature and symbols need to be defined.

As indicated in the RFP, there is a need to show special liner with inclined grout holes to permit grouting from within the tunnel. This might be a challenge for reinforcement arrangement and also for the universal ring that was selected to be used.

Plans: Intecsa's tunnel liner drawings have shown liner segment positions but no details for the liners. A typical section and a typical liner segment should be detailed and shown on the plans to aid the quantity calculation and cost estimate and be part of the submittal. Notes should be provided for regarding concrete, reinforcing steel, bolts and dowels, grouts, joints and so on. The plans should also show the details for the joints – circumferential and radial, and special

seismic joints if they are envisioned.

Drawing submitted are hard to follow, the key position drawings and taper design (drawings 1 and 2) can be summarized in a table form with one demonstrating location. The segments geometry drawings (drawing 5 and 6) can be demonstrated in a simpler form by showing the geometry of each segment individually, or showing segment B, C and K and showing segments A1 through A7 in a table form.

Conclusions: The preliminary design and plans for the liners provided by Intesca were apparently based on many optimistic assumptions, which may lead to underestimation of the liner cost and therefore the project cost. To reduce the risk, design work may be enhanced by considering more carefully selected loading cases and using more sophisticated modeling techniques. Further analysis is needed to evaluate the seismic and fire load cases and their impact on the liner reinforcement. The potential need for seismic joint must be addressed because it is a significant cost item.

The design and plans need to be further developed to demonstrate basic design configuration. It is understood that all of these calculation/drawings will be finalized during final design, but the design team need to show that the basic design requirements are satisfied and also provide the CJV enough information to properly cost the project.

Given the proposal schedule, it is probably a good idea to focus our effort in trying to satisfy the basic proposal requirements and put more emphasis on identifying key components missing for costing the tunnel liner. As an example, probably there is no need to further develop the taper geometry but rather develop a simple drawing/sketches that demonstrate key components of the segments components/geometry.

Reviewed Documents:

1. Precast Segmental Lining Design by Intecsa, August 6th 2010
2. Appendix – Precast Segment Tunnel Lining Design (STAAD III Input and Output files)
3. 6 Drawings – Geometrical Configuration for the tunnel liner

Applicable Requirements:

1. Technical Requirements 2.32 – Bored Tunnel Engineering
   a. 2.32.2 Mandatory Standards
      i. FHWA NHI-09-010, Technical Manual for Design and Construction of Road Tunnels
   b. 2.32.4.4 Design Criteria
      i. 2.32.4.4.4 Segment Design
   c. 2.32.4.5 Product Requirements
2. Appendix B8 – Seismic Design Criteria

Created by:	*Yang Jiang/Samer Sadek*
Date:	*8/18/10*
Reviewed by:	*Rich Johnson*
Date:	*8/18/10*
Approved by: *(Dan Dixon or Rich Johnson)*	*Rich Johnson*
Date:	*8/18/10*

DRAFT
Technical Memorandum
9/2/2010
Freeze Protection of Fire and Storm Pipes

Brief Description: *Because of the response to the tunnel heating question the fire pipe and the storm water forced main will be exposed to freezing. Both systems must be freeze protected to protect these critical life safety systems.*
Question submitted 8/4/2010:
The egress walkway indoor design conditions require 68 degrees Fahrenheit which will require heat. To heat a space to this level will require insulation as per the Washington State Energy Code Seattle Amendments chapter 14. The bored tunnel wall that is in contact with the earth we should be able to get a variance because of the unusual circumstance but the wall separating the walkway and maintenance areas that separate the roadway will require R-19 insulation if we use the prescriptive method. There is no insulation present on this wall please advise.
Response from Sims is as follows:
No insulation is required for either the bored tunnel wall or the wall separating the Road ways from the pedestrian levels in the tunnel. The design intent was that these tunnel spaces are unheated relying on ambient subsurface temperature. These are unoccupied spaces, except during emergency evacuation or tunnel maintenance. A future addendum will revise the range of temperatures.

Objective: Protect the critical life safety fire protection system and storm water forced main.

Existing Conditions: 2.38.4.2.2 page 2.38-3 lines 12 through 16

Piping in Emergency Corridor and Fire sprinkler Valve rooms is not considered to be protected from freezing conditions. Perform analysis to determine the extent of freeze protection required for fire suppression systems (if any) and provide freeze protection systems to the extent required where analysis determined that pipes are subject to freezing temperature.

The utilidor is ventilated by unheated outside air and the storm forced main will be exposed to freezing temperatures.

Alternatives Evaluated: The exit corridor is ventilated with outside air and the corridor contains both the stand pipe and the fire pipe. The fire pipe will now be exposed to freezing temperatures so the fire protection pipe will require freeze protection. We propose to utilize an insulated pipe system with a circulation pump and water heater at each portal. This will require a return pipe approximately 2 ½ inch to 4" pipe the length of the tunnel.

We propose to utilize heat tape and insulation of the 12" forced main. The pipe length is approximately 6,150 linear feet.

Summary and Conclusions:

Created by:	*Aaron Sharp*
Date:	*9/2/2010*
Reviewed by:	*Jerry Casey*
Date:	*9/2/2010*

Approved by: _____
(Dan Dixon or Rich Johnson) _____
Date: _____

Technical Memorandum
9-5-10
Theoretical TBM Face Pressure

Brief Description: Provide maximum theoretical tunnel boring machine (TBM) face pressure.

Objective: Provide the Construction Joint Venture (CJV) with anticipated maximum TBM face pressure requirement for its use in determination of the design of the TBM.

Existing Conditions: Previous Technical Memos or reports issued on July 16 and Aug. 10 with additional communications through Sept. 3, 2010.

Alternatives Evaluated: Consideration of the applicable hydrostatic force acting at the face of the TBM.

Summary and Conclusions: The theoretical maximum face pressure at the axis/springline of the 57.5 foot outside diameter TBM is 5.6 bars at station 212+00 using full hydrostatic pressure. For this particular alignment and site, it is reasonable and prudent to anticipate full hydrostatic pressure along the full length of the alignment. This value was determined using engineering analysis as well as engineering judgment with regard to soil conditions, methods of determining soil pressures and applicable hydrostatic pressure. Determination of the face pressure is not an exact science but a compilation of consideration of quantitative analysis, data made available at the time of the analysis, empirical equations and experience in similar conditions.

This value should be considered the theoretical face pressure at the axis of the TBM without any margin of safety (contingency for unknowns) to which the TBM should be designed to resist.

The CJV needs to make its own determination of the appropriate margin of safety to be added to this theoretical valve.

The CJV may wish to consider designing the TBM for an operating pressure of 6.0 bars and emergency pressure of 7.0 bars.

Please see attached for graphic and numerical presentation of the theoretical TBM face pressure at the axis of the machine throughout the length of the alignment.

Created by: *Rich Johnson*
Date: *Sept. 4, 2010*
Input by : *Samuel Estefania, Mike Bailey, Scott Bender, Samer Sadek*
Date: *Q2 and Q3 of 2010*
Approved by:
(Dan Dixon or Rich Johnson) *Rich Johnson*
Date: *Sept. 4, 2010*

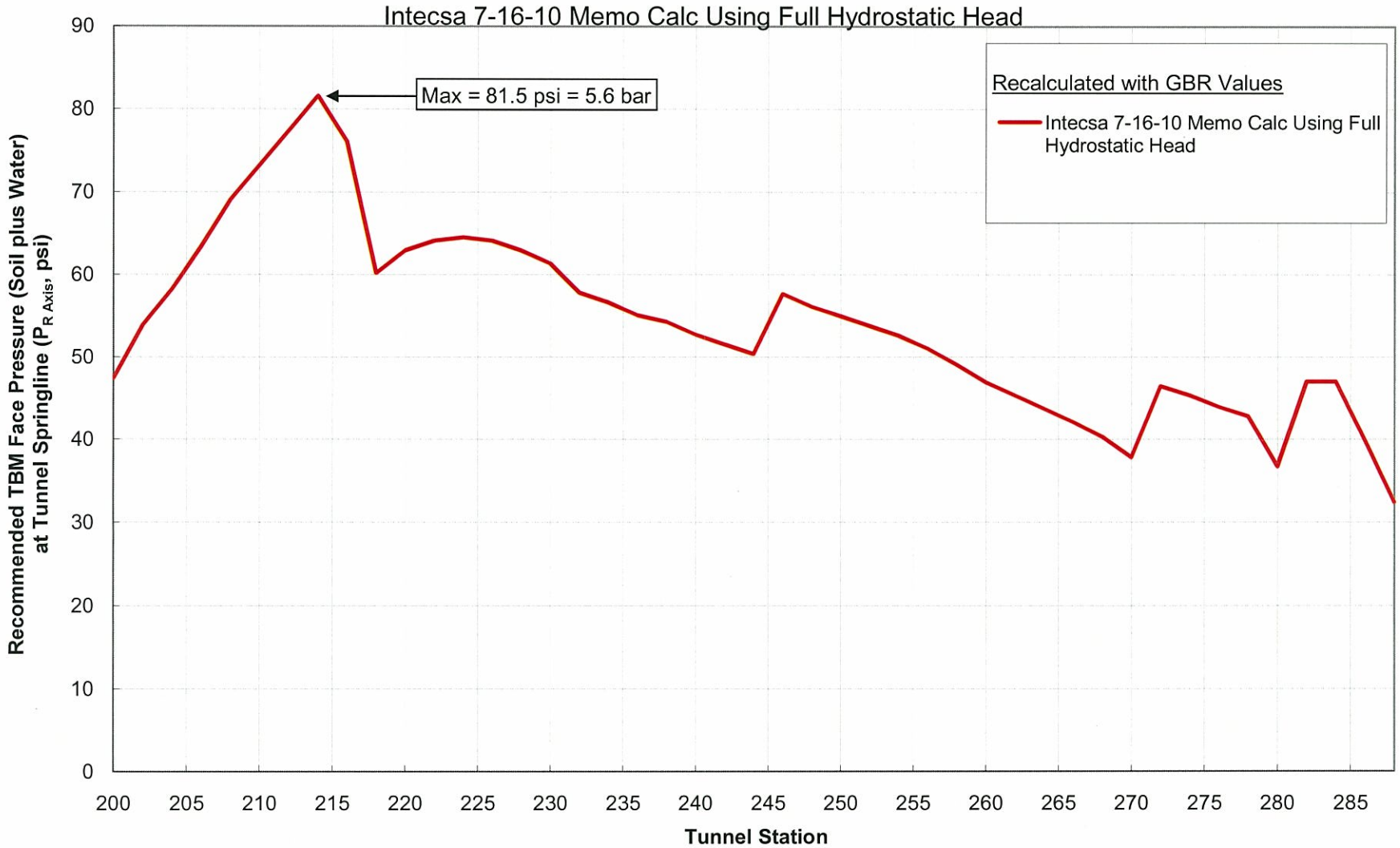

Note: $P_{R\ Axis}$ for "Intecsa 7-16-10 Memo Calc Using Full Hydrostatic Head (hw)" plot is estimated based on Hart Crowser's interpretation of how Intecsa selected $P_{R\ Axis}$ in Intecsa's July 16, 2010 memo but with the calculation updated to include the full hydrostatic head indicated in GBR. Selecting this recommended pressure involves engineering judgment and needs to be verified by tunnel engineer for this case.

Face Pressure Calculations Reproduced From Intecsa's July 16, 2010 Memo with Full Hydrostatic Head (h_w) Presented in GBR

ESU	Station	H (feet)	h_w (feet)	H* (feet)	Soil Type	γ_N (pcf)	ϕ (°)	ϕ_{sat} (°)	Sat? Y/N	K_o Baseline	OCR Empirical	K_o NC - Empirical	α 0.46±0.06	K_o OC - Empirical	K_a	K_{calc}	P_V (psi)	P_H (psi)	$P_{H\,max}$ (psi)	$P_{H\,min}$ (psi)	$P_{R\,Axis}$ [1] (psi)
2	200 + 00	58.1	62	58	GRANULAR	125	33	30	Y	0.5		0.50	0.5	0.50	0.33	0.50	52	39.50	47.39	35.55	47.39
2	202 + 00	67.0	70	67	GRANULAR	125	33	30	Y	0.5		0.50	0.5	0.50	0.33	0.50	59	44.90	53.88	40.41	53.88
5	204 + 00	75.9	78	76	GRANULAR	130	39	36	Y	0.8	2	0.41	0.5	0.41	0.26	0.41	69	48.49	58.19	43.64	58.19
5	206 + 00	80.3	86	80	GRANULAR	130	39	36	Y	0.8	2	0.41	0.5	0.41	0.26	0.41	75	52.81	63.37	47.53	63.37
5	208 + 00	91.4	94	87	GRANULAR	130	39	36	Y	0.8	2	0.41	0.5	0.41	0.26	0.41	81	57.53	69.04	51.78	69.04
5	210 + 00	102.6	102	87	GRANULAR	130	39	36	Y	0.8	2	0.41	0.5	0.41	0.26	0.41	85	61.00	73.20	54.90	73.20
5	212 + 00	104.8	110	87	GRANULAR	130	39	36	Y	0.8	2	0.41	0.5	0.41	0.26	0.41	88	64.46	77.36	58.02	77.36
5	214 + 00	111.4	118	87	GRANULAR	130	39	36	Y	0.8	2	0.41	0.5	0.41	0.26	0.41	92	67.93	81.52	61.14	81.52
7	216 + 00	122.6	126	48	COHESIVE	120	25	22	Y	1.4	5	0.63	0.5	1.56	0.45	0.45	74	63.36	76.03	57.03	76.03
7	218 + 00	129.2	134	48	COHESIVE	120	25	22	Y	1.4	5	0.63	0.5	1.56	0.45	0.45	77	66.83	80.19	60.15	60.15
7	220 + 00	133.7	141	48	COHESIVE	120	25	22	Y	1.4	5	0.63	0.5	1.56	0.45	0.45	80	69.86	83.83	62.88	62.88
7	222 + 00	142.6	144	48	COHESIVE	120	25	22	Y	1.4	5	0.63	0.5	1.56	0.45	0.45	82	71.16	85.39	64.05	64.05
7	224 + 00	147.0	145	48	COHESIVE	120	25	22	Y	1.4	5	0.63	0.5	1.56	0.45	0.45	82	71.59	85.91	64.44	64.44
7	226 + 00	149.2	144	48	COHESIVE	120	25	22	Y	1.4	5	0.63	0.5	1.56	0.45	0.45	82	71.16	85.39	64.05	64.05
7	228 + 00	149.2	141	48	COHESIVE	120	25	22	Y	1.4	5	0.63	0.5	1.56	0.45	0.45	80	69.86	83.83	62.88	62.88
7	230 + 00	142.6	137	48	COHESIVE	120	25	22	Y	1.4	5	0.63	0.5	1.56	0.45	0.45	79	68.13	81.75	61.32	61.32
4	232 + 00	180.3	134	43	COHESIVE	145	40	37	Y	0.6	2	0.40	0.5	0.40	0.25	0.25	83	64.21	77.05	57.79	57.79
4	234 + 00	187.0	131	43	COHESIVE	145	40	37	Y	0.6	2	0.40	0.5	0.40	0.25	0.25	81	62.91	75.49	56.62	56.62
4	236 + 00	193.7	127	43	COHESIVE	145	40	37	Y	0.6	2	0.40	0.5	0.40	0.25	0.25	80	61.18	73.41	55.06	55.06
4	238 + 00	202.6	125	43	COHESIVE	145	40	37	Y	0.6	2	0.40	0.5	0.40	0.25	0.25	79	60.31	72.37	54.28	54.28
4	240 + 00	213.7	121	43	COHESIVE	145	40	37	Y	0.6	3	0.40	0.5	0.60	0.25	0.25	77	58.58	70.29	52.72	52.72
4	242 + 00	220.3	118	43	COHESIVE	145	40	37	Y	0.6	3	0.40	0.5	0.60	0.25	0.25	76	57.28	68.73	51.55	51.55
4	244 + 00	227.0	115	43	COHESIVE	145	40	37	Y	0.6	3	0.40	0.5	0.60	0.25	0.25	75	55.98	67.17	50.38	50.38
5-6	246 + 00	233.7	112	87	GRANULAR	125	39	36	Y	0.8	2	0.41	0.5	0.41	0.26	0.41	86	64.09	76.90	57.68	57.68
5-6	248 + 00	233.7	108	87	GRANULAR	125	39	36	Y	0.8	2	0.41	0.5	0.41	0.26	0.41	85	62.35	74.82	56.12	56.12
5-6	250 + 00	233.7	105	87	GRANULAR	125	39	36	Y	0.8	2	0.41	0.5	0.41	0.26	0.41	83	61.05	73.26	54.95	54.95
5-6	252 + 00	242.6	102	87	GRANULAR	125	39	36	Y	0.8	2	0.41	0.5	0.41	0.26	0.41	82	59.75	71.70	53.78	53.78
5-6	254 + 00	238.1	99	87	GRANULAR	125	39	36	Y	0.8	2	0.41	0.5	0.41	0.26	0.41	81	58.45	70.14	52.61	52.61
5-6	256 + 00	231.4	95	87	GRANULAR	125	39	36	Y	0.8	2	0.41	0.5	0.41	0.26	0.41	79	56.72	68.06	51.05	51.05
5-6	258 + 00	220.3	90	87	GRANULAR	125	39	36	Y	0.8	2	0.41	0.5	0.41	0.26	0.41	77	54.55	65.46	49.10	49.10
5-6	260 + 00	204.8	83	87	GRANULAR	125	39	36	Y	0.8	2	0.41	0.5	0.41	0.26	0.41	75	52.20	62.64	46.98	46.98
5-6	262 + 00	193.7	76	87	GRANULAR	125	39	36	Y	0.8	2	0.41	0.5	0.41	0.26	0.41	75	50.42	60.50	45.37	45.37
5-6	264 + 00	180.3	69	87	GRANULAR	125	39	36	Y	0.8	2	0.41	0.5	0.41	0.26	0.41	75	48.63	58.36	43.77	43.77
5-6	266 + 00	169.2	62	87	GRANULAR	125	39	36	Y	0.8	2	0.41	0.5	0.41	0.26	0.41	75	46.85	56.22	42.17	42.17
5-6	268 + 00	160.3	54	87	GRANULAR	125	39	36	Y	0.8	2	0.41	0.5	0.41	0.26	0.41	75	44.81	53.78	40.33	40.33
5-8	270 + 00	153.7	47	86	GRANULAR	125	40	37	Y	1.0	2	0.40	0.5	0.40	0.25	0.40	75	42.04	50.45	37.84	37.84
5-8	272 + 00	147.0	40	86	GRANULAR	125	40	37	Y	1.0	3	0.40	0.5	0.60	0.25	0.60	75	51.66	61.99	46.49	46.49
5-8	274 + 00	138.1	33	86	GRANULAR	125	40	37	Y	1.0	3	0.40	0.5	0.60	0.25	0.60	75	50.43	60.52	45.39	45.39
5-8	276 + 00	129.2	24	86	GRANULAR	125	40	37	Y	1.0	3	0.40	0.5	0.60	0.25	0.60	75	48.86	58.64	43.98	43.98
5-8	278 + 00	122.6	17	86	GRANULAR	125	40	37	Y	1.0	3	0.40	0.5	0.60	0.25	0.60	75	47.64	57.17	42.88	42.88
5-8	280 + 00	113.7	8	84	GRANULAR	125	40	37	N	1.0	3	0.36	0.5	0.54	0.22	0.54	73	40.82	48.99	36.74	36.74
5-8	282 + 00	98.1	0	84	GRANULAR	125	40	37	N	1.0	3	0.36	0.5	0.54	0.22	0.54	73	39.22	47.06	35.29	47.06
5-8	284 + 00	84.8	0	84	GRANULAR	125	40	37	N	1.0	3	0.36	0.5	0.54	0.22	0.54	73	39.22	47.06	35.29	47.06
5-8	286 + 00	71.4	0	71	GRANULAR	125	40	37	N	1.0	3	0.36	0.5	0.54	0.22	0.54	62	33.21	39.85	29.89	39.85
5-8	288 + 00	58.1	0	58	GRANULAR	125	40	37	N	1.0	3	0.36	0.5	0.54	0.22	0.54	50	27.02	32.43	24.32	32.43

Notes:

[1] $P_{R\,Axis}$ is the recommended pressure at tunnel springline due to soil and water pressures. This has been estimated based on Hart Crowser's interpretation of how Intecsa selected $P_{R\,Axis}$ in Intecsa's July 16, 2010 memo but with the calculation updated to include the full hydrostatic head indicated in the GBR. Selecting this recommended pressure involves engineering judgment and needs to be verified by tunnel engineer for this case.

D (feet)	γ_W (pcf)
57.5	62.4

DRAFT ~~FINAL~~

Technical Memorandum

September 23, 2010

Revised Recommendations for Subsurface Intervention Planning
SR 99 Bored Tunnel

Brief Description: Revised dewatering recommendations including dewatering to 0 and 2 bar and potential dewatering settlement mitigation

Objective:

Existing Conditions:

Alternatives Evaluated:

Summary and Conclusions:

Created by: *Mike Bailey, PE, Hart Crawser, Inc., Mike Swenson, PE, Hart Crowser, Inc., and Scott Bender, LHG and CGWP, Bender Consulting, LLC*
Date: *September 23, 2010*
Reviewed by: Rich Johnson
Date: 9.26.10
Approved by:
(Dan Dixon or Rich Johnson) Rich Johnson
Date: 9.26.10

In response to your request, the following provides recommendations for 5TP to consider for planning potential subsurface maintenance interventions during construction of the SR 99 Bored Tunnel Project. This memo revises and replaces our memo sent on August 17, 2010. These recommendations are based on Scott Bender's experience designing dewatering systems for the contractor, and Hart Crowser's experience representing the cities of Lake Forest Park and Bothell for the two Brightwater TBM interventions. These recommendations have been revised based on further analysis of the 19 proposed intervention locations for the 5R 99 Bored Tunnel.

1. An impermeable grout seal should be installed in the annular space between the tunnel lining segments and the native ground for a minimum recommended distance of 80 feet prior to an intervention site. Without this seal, groundwater will follow the annular space of the tunnel and will overwhelm the ability of dewatering wells to control the pressure heads. This recommendation is made regardless of the soil type being bored through.

2. Sufficient time must be provided to design and test the dewatering system for each intervention. A minimum of two borings will need to be drilled at each intervention site for design of the groundwater control system. Multilevel piezometers will need to be installed in the borings. The piezometers will need to be connected to a telemetry system for evaluating static and intervention groundwater pressures.

3. A minimum of one test dewatering well must be installed to determine the hydraulics at each intervention site. A 24-hour pumping test should be performed prior to design. The information from the test will be used to design the dewatering system and to estimate system discharge rates. The discharge rate confirmation will be important for permitting.

4. If a surface groundwater control system (dewatering wells) is installed, then the system would need to be tested prior to the TBM arrival at the intervention site. The TBM will affect ground and hydraulic conditions; a baseline system performance test is required for troubleshooting, as necessary, during the intervention.

5. About six dewatering wells were used for the Brightwater sites; 8 to 12 wells would likely be a minimum for this bore. This well estimate considers the diameter of the 5R 99 Bored Tunnel, and the fact that some wells would likely be 20 to 30 feet back from the face on either side of the tunnel. More wells and closer well spacing will be needed in silt and clay soils than in sandy soils; non-uniform soil conditions will increase the potential number of wells needed.

6. Plan for two months of system installation and testing. This does not include advance planning and permitting. On both of the Brightwater sites, there was a major effort involved in preparing submittals to address concerns of the City and property owners.

7. The drill rigs required for installing the wells require considerable space. On Brightwater, we had about a 70-foot by 30-foot footprint for drilling each well. The slope of the site and other access considerations for the drill rig must be considered. Additional area is needed for equipment lay-down and storage.

8. Air rotary drilling is loud. Working hours could be limited.

9. Advance planning is critical within the tight confines of the city. Existing utilities and structures will have a direct impact on dewatering system design. Establishing advance agreements with authorities and locals will provide a great benefit during construction. Once constructed, the dewatering system site at the surface is fairly low profile and quiet. The well heads and distribution piping would probably be located below grade. However, space will be required for backup generators and electrical panels.

10. Installing drainage wells from within the tunnel requires special equipment. This is not likely to be a good option for the SR 99 Bored Tunnel, considering the groundwater flow through the sandy soils that are anticipated along a considerable portion of the alignment. The high pressures require shutoff valves. The equipment available at Brightwater limited the diameter of the drainage well and the drilling equipment. The drainage well borehole must have suitable diameter to install a machine-cut well screen at least one inch in diameter, but ideally two inches or more in diameter. It must be of sufficient diameter get the tooling out of the hole under pressure, and it must be of sufficient diameter so that a tool (such as a swab or jet) can be used to clean the well if it plugs.

11. Estimated dewatering rates to reduce the groundwater pressure during the intervention to 0 and 2 bars are provided in Table 1 for the 19 proposed intervention locations.

12. Although the tunnel face is mostly or entirely anticipated to be in clay and silt soils between about STA 214+00 and 233+00, dewatering (or groundwater inflow) will still be an issue during interventions. This is due to the proximity and sometimes direct hydraulic connection with the underlying sands. Fractures present within these clays and silts will transmit groundwater pressures to the face and may cause face instability.

13. Based on our review of the soils, settlement due to groundwater drawdown during intervention dewatering may impact adjacent structures and utilities at the first two proposed interventions (STA 204+00 and 208+00) and potentially the third intervention site (STA 214+00) as well. We recommend recharge wells for limiting drawdown in the upper, settlement-sensitive soils as a contingency. The need for the recharge wells would be based on pumping tests performed during design for each intervention, as previously discussed. Tests for the first three interventions need to be performed well in advance of tunneling so we could analyze and prepare for recharge to mitigate settlement, if recharge is determined to be necessary. We estimate that approximately eight recharge wells per intervention site may be necessary.

14. We understand that Safe Havens consisting of an enclosed perimeter of secant piles around the intervention location are currently being considered at the south end of the alignment, and the locations of the interventions may shift depending on the final design of the Training Box and potential extension north of STA 200+00.

    a. Dewatering rates shown in Table 1 assume no Safe Havens are present, and dewatering rates will be significantly reduced where Safe Havens of secant piles are constructed. Where tangent piles are considered, there is greater risk of groundwater communication with the surrounding aquifer and dewatering rates may be higher than with secant piles.

b. The presence of Safe Havens using secant piles will mitigate potential risks of dewatering-induced settlement and impacts on structures and utilities. Where tangent piles are considered, there is a greater risk for potential groundwater communication with the surrounding aquifer and drawdown-induced settlement than with secant piles.

c. If the Training Box and extension and intervention Safe Havens allow the intervention initially proposed at STA 214+00 to shift north, the risk of drawdown-induced settlement may be reduced, making the recharge contingency less likely.

Attachments:
Table 1. Interventions Plan 9-23-10 rev 4.pdf

SEATTLE TUNNEL PARTNERS

SR 99 BORED TUNNEL: INTERVENTIONS PLAN

September 5, 2010

Interv. #	Sta.	Gap btw Intervent. (ft)	Pressure at SL (PSI)	Pressure at SL (bar)	Divers JV crews	Divers Pros.	ESU	Overbur. (ft)	Water Ht. Above SL (ft)	Dewater. Disch. to achieve 0 bars (gpm)	Dewater. Disch. to achieve 2 bars (gpm)	Closer "A" building/structure #	Closer "A" building/structure Name	Closer "A" building/structure Sta.	Closer "A" building/structure Loc.	Closer "A" building/structure Horiz. (ft)	INTERVENTIONS: Cake prep. and comp. (h)	Max. work per crew (h)	CHD Inspec. (h)	Cutter disc changes #	Cutter disc changes Time ea. (h)	Cutter disc changes Total (h)	Bucket lips changes #	Bucket lips changes Time ea. (h)	Bucket lips changes Total (h)	Picks changes #	Picks changes Time ea. (h)	Picks changes Total (h)	Others (h)	Total CHD work (h)	Final decomp. (h)	Refill CHD (h)	Total time (h)	Crews needed (#)	Comments
1	204+00	400	47	3.2	X		5 (CSG)	47.9	78	150 - 500	<80	A160	One Yesler/Al Bocalino	212+46	East	846	48.0	2.5	7.0	0	4.0	0.0	0	2.0	0.0	0	0.50	0.0	0.0	7.0	3.2	24.0	82.2	3	First intervention so preparation time will take longer.
2	208+00	400	53	3.7		X	5 (CSG)	63.4	94	200 - 600	50 - 120	A160	One Yesler/Al Bocalino	212+46	East	446	32.0	2.0	6.0	0	4.0	0.0	0	2.0	0.0	0	0.50	0.0	0.0	6.0	3.5	16.0	57.5	3	Professional divers. Learning curve.
3	214+00	600	56	3.9		X	5 (CSG)	83.4	118	250 - 650	100 - 300	A160	One Yesler/Al Bocalino	212+46	East	-156	24.0	2.0	6.0	0	4.0	0.0	0	2.0	0.0	12	0.50	6.0	0.0	12.0	3.5	12.0	51.5	6	Professional divers. Learning curve.
4	218+00	400	29	2.0	X		7 (CCS)	101.2	134	1,300 - 1,700	500 - 700	A161	Commuter Parking/Commuter Center Building	217+75	Partial over	-25	18.0	5.0	8.0	3	4.0	12.0	0	2.0	0.0	30	0.50	15.0	0.0	35.0	2.6	5.0	60.6	7	Again interventions with our crews. Still learning curve.
5	223+00	500	25	1.7	X		7 (CCS)	119	145	1,300 - 1,800	700 - 900	T243	Federal Office Building	221+76	Over	-124	14.0	8.0	7.0	0	4.0	0.0	12	2.0	24.0	50	0.50	25.0	12.0	68.0	3.4	4.0	89.4	9	Still learning curve. Cleaning/replacing water/foam nozzles.
6	228+00	500	25	1.7	X		7 (CCS)	121.2	141	1,300 - 1,800	650 - 800	T230	Colonial/Grand Pacific Building	228+41	Over	41	10.0	8.0	6.0	6	4.0	24.0	0	2.0	0.0	30	0.50	15.0	0.0	45.0	3.4	3.3	61.7	6	
7	233+00	500	15	1.0	X		4 (TD)	156	132	1,200 - 1,700	500 - 700	T216	Harbor Steps (Northeast Tower)	233+32	Partial over	32	8.0	8.0	6.0	9	4.0	36.0	0	2.0	0.0	30	0.50	15.0	6.0	63.0	0.9	2.5	74.4	8	Replacing earth pressure sensors.
8	238+00	500	12	0.8	X		4 (TD)	174.6	125	1,200 - 1,600	450 - 650	T205	South Arcade Condos	238+26	West	26	8.0	8.0	6.0	0	4.0	0.0	0	2.0	0.0	80	0.50	40.0	0.0	46.0	0.2	2.5	56.7	6	
9	242+00	400	12	0.8	X		4 (TD)	192.3	118	1,200 - 1,500	450 - 550	T186	Déjà vu Showgirls	242+22	East	22	8.0	8.0	6.0	0	4.0	0.0	12	2.0	24.0	30	0.50	15.0	10.0	55.0	0.2	2.5	65.7	7	Cleaning/replacing water/foam nozzles.
10	246+00	400	29	2.0	X		5 (CSG)-6 (CSF)	202	112	1,200 - 1,400	350 - 500	T184	Gatewood Hotel	244+29	East	-171	10.0	5.0	6.0	6	4.0	24.0	0	2.0	0.0	55	0.50	27.5	0.0	57.5	2.6	3.3	73.4	12	
11	250+00	400	29	2.0	X		5 (CSG)-6 (CSF)	205.7	105	1,300 -2,200	400 - 650	T146	Cristalla Condominium	254+88	Over	488	10.0	5.0	6.0	0	4.0	0.0	0	2.0	0.0	30	0.50	15.0	5.0	26.0	2.6	3.3	41.9	6	Replacing earth pressure sensors.
12	254+00	400	29	2.0	X		5 (CSG)-6 (CSF)	210.1	99	1,200 - 2,100	300 - 350	T146	Cristalla Condominium	254+88	Over	88	10.0	5.0	6.0	6	4.0	24.0	12	2.0	24.0	0	0.50	0.0	8.0	62.0	2.6	3.3	77.9	12	Cleaning/replacing water/foam nozzles.
13	258+00	400	40	2.8	X		5 (CSG)-6 (CSF)	192.3	90	1,400 - 3,000	400 - 800	T146	Cristalla Condominium	254+88	Over	-312	12.0	3.0	6.0	0	4.0	0.0	0	2.0	0.0	70	0.50	35.0	0.0	41.0	2.6	4.0	59.6	14	
14	262+00	400	36	2.5	X		5 (CSG)-6 (CSF)	165.7	76	1,100 - 2,400	150 - 300	A120	314 Bell	267+15	Partial over	515	11.0	4.0	6.0	0	4.0	0.0	12	2.0	24.0	60	0.50	30.0	0.0	60.0	3.0	3.5	77.5	15	
15	266+00	400	34	2.3	X		5 (CSG)-6 (CSF)	141.2	62	1,000 - 2,000	0	A120	314 Bell	267+15	Partial over	115	11.0	4.0	6.0	0	4.0	0.0	12	2.0	24.0	30	0.50	15.0	4.0	49.0	2.6	3.3	65.9	12	Replacing earth pressure sensors.
16	270+00	400	33	2.3	X		5 (CSG)-8 (TLD)	125.7	47	900 - 2,000	0	T086	Seattle City of - FFD	270+18	Over	18	11.0	4.0	6.0	4	4.0	16.0	0	2.0	0.0	60	0.50	30.0	0.0	52.0	2.6	3.3	68.9	13	
17	275+00	500	42	2.9	X		5 (CSG)-8 (TLD)	106	29	800 - 1,700	0	T077	6th & Wall Building	274+91	Over	9	12.0	3.0	6.0	0	4.0	0.0	12	2.0	24.0	40	0.50	20.0	0.0	50.0	2.9	4.0	68.9	17	
18	280+00	500	37	2.6	X		5 (CSG)-8 (TLD)	85.7	9	400 - 800	0	A108	Wallgreens	280+18	West	18	12.0	4.0	6.0	0	4.0	0.0	0	2.0	0.0	40	0.50	20.0	0.0	26.0	3.3	4.0	45.3	7	
19	286+00	600	39	2.7	X		5 (CSG)-8 (TLD)	43.4	0	120 - 240	0	A104	233 6th Ave N	286+63	West	63	12.0	3.0	6.0	0	4.0	0.0	0	2.0	0.0	0	0.50	0.0	0.0	6.0	2.6	4.0	24.6	2	
	288+20	220			17	2											281.0		118.0	34		136.0	72		144.0	647		323.5	45.0	766.5	48.1	107.8	1203.4	162	

STP HEALTH AND SAFETY PLAN

SR 99 BORED TUNNEL ALTERNATIVE DESIGN-BUILD PROJECT

DRAGADOS USA – TUTOR PERINI – HNTB

Washington State Department of Transportation

SEATTLE TUNNEL PARTNERS

SEATTLE TUNNEL PARTNERS

Health & Safety Plan

CONSTRUCTION HEALTH & SAFETY REQUIREMENTS MANUAL

TABLE OF CONTENTS

TABLE OF CONTENTS

TABLE OF CONTENTS

TABLE OF CONTENTS

TABLE OF CONTENTS

TABLE OF CONTENTS

TABLE OF CONTENTS

TABLE OF CONTENTS

Section 1 – Seattle Tunnel Partners Mission Statement

Seattle Tunnel Partners is committed to the safety, health, and protection of our staff, employees, the general public, as well as our construction management and subcontractor partners and their respective workforces. It is therefore expected that each person, of every tier and position, will commit to maintaining STP values, goals, and objectives, as outlined within the body of this Manual. No single aspect of construction is of greater importance than the health and well-being of our construction workforce, staff, and the environment.

The Mission of the STP Management Team, with respect to Health, Safety and the Environment, is the prevention of injury, illness, environmental impact, and property damage during all construction activities that are conducted at STP jobsites. This Mission will be accomplished using a multi-dimensional approach to the management of safety, including the following:

- Development of strong partnerships between STP, WSDOT and subcontractors
- Implementation of a comprehensive Environmental, Safety and Health Plan for construction activities
- A defined accountability and responsibility program that fosters safety ownership during construction
- A structured self-evaluation program for the purpose of monitoring and continuous improvement
- Development and maintenance of a training and education program specific to construction activities
- A defined set of company-wide goals and objectives related to the safety and health of the workforce
- Injury prevention through an intense focus on activity pre-planning at every level of construction
- A subcontractor assessment process intended to increase the value of safety management systems
- Maintenance of strong, open communication lines where all interested parties add value to safety

The practices and programs listed above, in conjunction with a strong management commitment and maintenance of positive relationships will prove to be an invaluable asset to the STP, its partners, and its neighbors. Meeting this goal will require steadfast dedication at every level of the construction projects, and begins with this commitment by the management teams at STP.

Section 2 – General

A. Purpose

1. This Manual has been developed by STP as part of a comprehensive Environmental, Health, and Safety Program dedicated to the prevention of injuries, illnesses, property damage, and environmental impact on the SR99 Bored Tunnel Project conducted by STP. This Manual:
    a. Establishes the minimum safety, health and environmental guidelines, expectations, and responsibilities for construction projects.
    b. Establishes and communicates the list of goals and objectives to be achieved by construction projects.
    c. Outlines the minimum expected components of the Safety Management System(s) to be utilized by construction projects.
    d. Is intended to be a reference guide to be utilized by STP management and subcontractors during all phases of construction projects.
    e. Outlines the minimum responsibilities and duties of STP managers and subcontractors conducting operations on construction projects of STP.

B. Scope

1. This Manual applies to all construction, renovations, alterations, and demolition, regardless of value or volume, conducted by STP.
2. All STP managers, subcontractors of every tier and their respective employees are required to comply with the requirements outlined in this Manual.
3. Where conflicts exist between this Manual and federal, state, or local requirements or between this Manual and contractual language, the more stringent of the requirements shall apply.

Section 2 – General

A. Definitions

Code of Federal Regulations (CFR)	The Code of Federal Regulations, as promulgated by the Occupational Safety and Health Administration (Title 29CFR), the Environmental Protection Agency (Title 40CFR), or the Department of Transportation (Title 49CFR).
Competent Person	One who is capable of identifying existing and predictable hazards in the surroundings or working conditions which are unsanitary, hazardous, or dangerous to employees, the public, and the environment, and who has authorization to take prompt corrective measures to eliminate them.
Construction Project or Project	Any project involving construction, demolition, major renovation, or alteration. The term 'construction' is interchangeable with demolition, major renovation, and alteration, except where otherwise noted.
Contract	The binding agreement, written or otherwise, between STP and the Owner Included in this term are all associated documents and drawings referenced or included in the contract. The term 'contract' may also apply to agreement entered between a prime-tier subcontractor and lower-tier subcontractors/suppliers/vendors of any tier.
Contract Documents	Documents and drawings listed or included as part of the contract.
CSM	Dragados USA Corporate Safety Manager
DART	**D**ays **A**way from work, **R**estriction of duty, or **T**ransfer. This term is used by OSHA and the Bureau of Labor and Statistics for tracking and reporting of these types of injuries.
DUSA	**STP**
Employee	Persons employed by the construction manager, general contractor, subcontractor, vendor, supplier, or owner employee. This term means any person on the Project, except where specifically denoted.
Employer	Any entity employing workers at or in support of the construction project.
EVP	Dragados USA Executive Vice President
Health and Safety Plan (HASP)	The safety plan, owned by each individual contractor, which outlines the requirements, policies, procedures, responsibilities, goals, and accountability structure specific to this contractor.

Section 2 – General

Insurance Company	Any insurance company (OCIP or otherwise) that provides insurance coverage for the construction project of contractor, regardless of tier. This term may include, but is not limited to, insurers for worker's compensation, general liability, excess liability, professional liability, or builder's risk.
Jobsite	The property owned by, leased by, or under the control of the Owner on which construction activities with respect to the project are being conducted and/or areas and ways contiguous thereto. Jobsite includes any work area set up by the Owner for use by an authorized project contractor exclusively for storage of material or equipment, or for on-site fabrication of material to be used in the construction and all staging and project support areas. Jobsite does not include any permanent locations of any insured party other than the Owner. This term is interchangeable with 'Project' and 'Site'.
Manual	This Construction Safety, Health and Environmental Requirements Manual.
OCIP	**O**wner-**C**ontrolled **I**nsurance **P**rogram
OSHA	**O**ccupational **S**afety and **H**ealth **A**dministration, working under the authority of the U.S. Department of Labor. OSHA is responsible for the enforcement of the Occupational Safety and Health Act of 1970, and charged with the promulgation of standards under this Act.
Owner	.The owner of a project that is also party to the owner-contractor and owner-designer agreements. WSDOT.
Pre-Task Plan (PTP)	The written plan developed by the worker/foreman/contractor performing any operation. This plan describes tools, equipment, materials, the steps or tasks involved with the operation, the hazards associated with each step, and the controls that will be utilized by the workforce to eliminate or minimize the listed hazards.
Project	The property owned by, leased by, or under the control of the Owner on which construction activities with respect to the project are being conducted and/or areas and ways contiguous thereto. Project includes any work area set up by the Owner for use by an authorized project contractor exclusively for storage of material or equipment, or for on-site fabrication of material to be used in the construction and all staging and project support areas. Project does not include any permanent locations of any insured party other than the Owner. This term is interchangeable with 'Jobsite' and 'Site'.
Project Manager	The individual designated by STP to manage a given project. Normally includes administrative and technical responsibilities.
Project Safety Manager	The individual assigned by STP who is responsible for the oversight and maintenance of the project safety program and its attributes.

Section 2 – General

Project-Specific Health and Safety Plan (HASP)	The safety plan, developed on behalf of the STP Project which outlines the requirements, policies, procedures, responsibilities, goals, and accountability structure specific to that project. This Plan is incorporated as a contract document into each lower-tier subcontract and agreement specific to the project.
Qualified Person	One who, by possession of a recognized degree, certificate, or professional standing, and who by existing knowledge, training, and/or experience, has successfully demonstrated the ability to solve or resolve problems related to the subject matter, the work, or the project.
SHEMP	Safety Health and Environmental Programs. These documents are an integral part of the Site Specific Safety Plan. They will be used to define, Objectives, performance indicators, potential impacts, legal requirements, operational controls, authorities, responsibilities, training, records, documents, and emergency response for all safety aspects.

Section 2 – General

Safety Representative	The individual assigned by the STP or the subcontractor who is responsible for the oversight and maintenance of the project safety program and its attributes. This person may be an individual dedicated full-time to safety, dependant upon project-specific or contractual requirements. This term also applies to subordinates of the Project Safety Manager.
SFD	Seattle Fire Department
Subcontractor	Any person or organization of any tier, having a direct or indirect contract with STP or any subcontractor. The term subcontractor includes subcontractors, vendors and suppliers of any tier performing work at the project.
Superintendent	The person typically employed by STP, responsible for the general coordination of work and labor forces. This person may be a General Superintendent overseeing other Superintendents, or an Area Superintendent responsible for a defined operation or contractor.
TRC	**T**otal **R**ecordable **C**ases. This term is used by OSHA and the Bureau of Labor and Statistics for tracking and reporting of injuries and illnesses that meet the defined criteria of a 'recordable' incident. Commonly referred to as 'OSHA Recordable' rate.
Visitor	Any person who is not an employee of the Owner, construction manager, STP, or subcontractor(s), working on the project. This term includes salespersons, vendors, suppliers, architects, engineers, etc.
WAC	Washington Administrative Code
WSDOT	Washington State Department of Transportation
Work	Includes all matters and activities conducted on the construction project required for the progress or completion of the project.

Section 2 – General

B. STP Construction Safety Goals

The STP Safety Department, in conjunction with STP Top Management has established a set of goals and objectives for all activities managed by STP.

1. This project will clearly communicate to all project **Employees** the goal of zero fatalities and debilitating injuries, the ultimate goal of zero accidents and the incident/accident free workplace.
2. The overall project goal for DART injuries/illnesses will be twenty-five percent (25%) lower than the most recent DART rate (as of project inception date), as published by the Bureau of Labor and Statistics, for the Standard Industrial Classification (SIC) Code 1600 – Heavy Construction. This goal, along with regular updates, shall be clearly communicated to all project staff and **Employees**. All project **Employees** shall be informed of the current DART rate at least twice monthly via postings and issuance of project alerts. Project Management shall review the current DART rate as part of the Monthly Management Safety Meeting.
3. The overall project goal for TRC injuries/illnesses will be twenty-five percent (25%) lower than the most recent TRC rate (as of project inception date), as published by the Bureau of Labor and Statistics, for the Standard Industrial Classification (SIC) Code 1600 – Heavy Construction. This goal, along with regular updates, shall be clearly communicated to all project staff and **Employees**. All project **Employees** shall be informed of the current TRC rate monthly via postings and issuance of project alerts. Project Management shall review the current TRC rate as part of the Monthly Management Safety Meeting.
4. The project will re-evaluate the goals on a yearly basis. The intent will be to focus on continual improvement towards the ultimate goal of zero accidents.

If the project falls short of above-listed goals, **Project Management** shall develop and implement a 'recovery plan' with the purpose of meeting or exceeding the goal(s). This plan shall include a description of methods, amendments, procedures, responsibilities, and an implementation schedule for the actions required to obtain the established goal(s). It is the responsibility of the **Project Manager and Superintendents** to oversee the development and implementation of this plan, and to monitor the progress made towards achieving the established goal(s). This plan shall be reviewed and updated/amended monthly by the project management team until such time as the goals have been met or achieved.

C. Scope of Work

.

D. Submittals

.

Section 3 – Aerial Lifts

A. General Requirements

1. The use of all types of aerial lifts shall comply with OSHA 29CFR Part 1926.453 and WAC 296-869 at a minimum.
2. Training, by a person qualified on the subject matter, shall be provided for all **Employees** required to operate or work in or from aerial lifts. Training shall include the following, at a minimum:
    a. The nature of hazards associated with the operation and use of the specific model being utilized;
    b. Pre-use inspection and maintenance requirements associated with the specific model being utilized;
    c. The proper operation and use of controls for the specific model being utilized;
    d. The nature of electrical hazards, including overhead lines, in the work area;
    e. Fall protection requirements for the equipment being utilized;
    f. The nature of falling object hazards associated with the use of aerial lifts;
    g. The nature of pinch point hazards associated with the use of aerial lifts, specifically the placement of hands and arms when the aerial lift is being operated; and
    h. The maximum allowable load rating, including personnel and materials for the specific model being utilized.
3. Operators and occupants of aerial lifts shall carry verification of the aforementioned training while utilizing aerial lifts. This verification shall be produced upon request.
4. The hazards and hazard controls associated with the use of aerial lifts, specific to the operation at hand, shall be documented as part of the Pre-Task Plan (PTP), and shall be reviewed with the workforce prior to commencement of activities.
5. All aerial lifts shall be inspected by the operator/supervisor prior to entry onto the project, in accordance with Section 11 – Equipment Safety. Any aerial lift not meeting the initial inspection criteria shall be denied entry onto the project by the person(s) conducting the inspection.
6. Aerial lifts shall be inspected by the operator each day prior to use, in accordance with the manufacturer's requirements. This inspection will be posted on the aerial lifts (see Section 10.B – Equipment Inspections). Aerial lifts not meeting inspection criteria shall be immediately taken out of service, locked, and tagged out, until appropriate repairs have been made.
7. Any person observed utilizing an aerial lift in an unsafe manner shall be cause for the **Foreman** or supervisor to immediately halt the operation of the aerial lift, and conduct re-training, at a minimum. Training or re-training is the responsibility of STP Project Management.
8. The area(s) below the basket or platform of aerial lifts shall be cordoned off using DANGER tape. Danger signs informing project personnel of the overhead hazard shall be posted at the area perimeter.
9. Any aerial lift operating on inclined/declined surfaces (within the manufacturer's allowable conditions) shall have its wheels chocked to prevent movement.
10. Aerial lifts shall not be used to hoist/raise/position materials outside of the basket or platform (exception: written certification from Mfg.). The sum weight of all tools/materials/personnel shall not exceed the maximum load rating for the equipment.
11. Operators or occupants shall not exit the basket or platform of aerial lift when in the raised position, unless ALL of the following criteria are met:
    a. The platform must rest on a stable surface;
    b. 100% fall protection must be available and utilized;
    c. The manufacturer does not disallow use of the equipment for this purpose.
12. Modifications to aerial lifts are allowed only with the written, certified approval of the manufacturer.

Section 4 – Blasting

A. Compliance Requirements

1. Blasting and the use of explosives will comply with OSHA 29CFR Subpart U and the WAC 296-52 and the DUSA Blasting SOP at a minimum.
2. **STP** will develop a program, specific to the project, which meets or exceeds the guidelines listed in this Manual. This program shall be a **SHEMP** with supporting documentation..
3. All arrangements between the WSDOT and municipal officials will be finalized prior to the commencement of blasting activities.
4. Prior to bringing explosives on site, the STP shall develop a blasting safety plan. As a minimum, this plan shall include the following:
   a. List the names, qualifications, and responsibilities of personnel involved with explosives;
   b. STP requirements for handling, transportation, and storage of explosives; types of explosives; employee training programs and certifications; types of explosives; schedule of activities and loading procedures; detailed blasting schedule; explosives transportation route(s); safety signals methods and locations; danger area clearance; methods for securing the site; seismograph, vibration and damage control; test shots, post blast inspection and misfire procedures; provisions for disposal of explosives, blasting agents, unused and associated material; and post blast ventilation requirements.
   c. Public relations requirements before and after blasting (e. g. community communication, protection of structures and personnel).

B. Blaster Qualifications

1. Blaster Qualifications shall conform to OSHA 29CFR 1926.901, WAC 296-52-64005 to 64100 and SFD. Qualifications will be documented by the STP **Project Manager** and kept on file at the jobsite. The blaster shall be knowledgeable and competent in the use of each type of blasting method used at the project.

C. General Requirements

1. Only Qualified and authorized personnel shall handle or accept delivery of explosive or detonators. These personnel will be identified in the appropriate **SHEMP**, **PTP** and documentation will be kept by the **Project Safety Manager**. No other persons will be allowed in an area where explosives are being handled (min. 50 ft.)
2. STP requires that the Explosives Inventory be utilized for record keeping purposes.
3. Flammable gases/liquids, smoking, matches, fires or any spark or heat producing device shall not be allowed within 100 ft of explosives.
4. Housekeeping must be maintained at all times. No fire shall be fought that may contact explosives. All employees will be evacuated a safe distance from the area. The **Project Manager** will include in the Emergency Action Plan.
5. All explosives shall be accounted for at all times. The Blaster shall keep an accurate up to date record of explosives and detonators that are delivered, used and removed from the site. Appropriate authorities shall be notified of any loss or theft of explosives or detonators.
6. Every reasonable precaution, including signage, flags, barricades, guards, flagmen, horns, and blasting mats shall be used to assure public and employee safety. Warning signs shall be posted around the perimeter of the blast area.
7. Adequate signage, warning against the use of mobile radio transmitters shall be displayed on all roads with-in 1000 ft of blasting operations.
8. Ground level blasting shall be done only in daylight hours.
9. Explosives shall not be used underground in the presence of combustible dusts or gases.
10. Empty boxes, paper and packing materials that have contained/held explosives shall not be reused for any purpose. They shall be burned or buried.
11. If a misfire is found, the reentry team shall provide safeguards for excluding all employees from the danger zone.

12. Loaded holes are required to be shot the same day.
13. No person shall be allowed to re-drill holes which contain explosives.
14. Air monitoring will be ongoing prior to and following the blast. This data will be maintained on the project and shared with the blasting team.

D. Vibration and Damage Control

1. Blasting operations in or adjacent to cofferdams, piers, underwater structures or other facilities shall be carefully planned with full consideration for all forces and conditions involved.
2. Prior to ignition of vibration controlled blasting operations, a written plan for monitoring the operations shall be established.
3. Where vibration damage may occur, energy ratio and peak particle velocities shall be limited in accordance with the state requirements. When any recording indicates either the energy ratio or the peak particle velocity limits have been exceeded, blasting shall be suspended and the designated authority shall be immediately notified. Blasting shall not be resumed until the probable cause has been determined and corrective actions taken. Where required by state regulations, scaled distances shall be determined before each shot and included in the records. Scaled distances shall not exceed limitations set by the State.
4. Air blast pressure exerted on structures resulting from blasting shall not exceed 133 dB (0.013 psi)

Section 5 – Competent Person

A. General Requirements

1. A **Competent Person**, as defined by OSHA29CFR Part 1926.32(f), WAC 296-62-07728 and Section 2.C of this Manual, is required where **employees** are performing any of the activities listed below. The **Competent Person** is responsible for inspection of the operations for which he/she is listed as the **Competent Person**, as well as identification and correction of hazards.
2. Each **STP Supervisor and Subcontractors** of every tier are required to identify in writing the name of the **Competent Person(s)** assigned to the project, specifically for the following areas:
    a. Aerial Lifts
    b. Asbestos
    c. Bolting/Riveting/Fitting
    d. Blasting
    e. Concrete/Forms/Shoring
    f. Confined Space Entry
    g. Cranes/Derricks
    h. Demolition
    i. Electrical/LO/TO
    j. Excavation/Trenching
    k. Fall Protection
    l. First Aid/CPR
    m. Forklift Trucks
    n. Hazardous Materials/Waste Handling
    o. Hearing Conservation
    p. Ladders
    q. Lead
    r. Material Handling
    s. Rigging
    t. Scaffolding
    u. Tunneling
    v. Welding/Cutting
3. Prior to commencement of project activities, STP management must complete the **Competent Person** Identification Form, for the project files. Re-submission of the **Competent Person** Identification Form is required any time the **Competent Person** or alternate changes.
4. The **Competent Person** Identification Form shall be posted in each project and subcontractor office, shanty, break room, or general area where **Employees** gather.
5. For **STP and each subcontractor**, the **Competent Person** Identification Form shall be used to deliver a Tool Box Talk to the respective workforce, describing the roles and responsibilities of the **Competent Person**(s), as well as identification of the **Competent Person**(s) specific to that project. This Tool Box Talk shall be re-delivered as necessary when changes to the project workforce are made.

Section 6 – Confined Spaces

A. Definitions

1. Confined Space. As defined by OSHA29CFR Part 1910.146(b) and WAC 296-809 is any space that meets all three of the following criteria:
    a. It is large enough and so configured that an **Employee** can bodily enter and perform assigned work;
    b. It has limited or restricted means for entry or exit; and
    c. It is not designed for continuous **Employee** occupancy.
2. Permit-Required Confined Space. As defined by OSHA29CFR Part 1910.146(b)and WAC 296-809-800, is any space that meets any one of the following criteria:
    a. It contains or has a potential to contain a hazardous atmosphere;
    b. It contains a material that has the potential for engulfing an entrant;
    c. It has an internal configuration such that an entrant could be trapped or asphyxiated by inwardly converging walls or by a floor which slopes downward and tapers to a smaller cross-section; or
    d. It contains any other recognized serious safety or health hazard that could:
    e. Impair the ability to self-rescue; or
    f. Result in a situation that presents an immediate danger to life or health
3. Entry. Breaking the plane of the confined space entry point, with any part of the body.

B. General Requirements

1. All confined spaces, whether new installations or existing, shall be considered permit-required, as defined by this Manual, until the **competent person** documents otherwise.
2. **STP** and all **Subcontractors** who perform confined space entries shall comply with the requirements outlined in this Section, at a minimum, but may opt to comply with OSHA29CFR Part 1910.146(d) through (k) as an alternate means for compliance with this Section.
3. **STP** and any **Subcontractor** requiring employees to enter a confined space is required to have a personal confined space entry safety program, specific to that operation, which meets or exceeds the guidelines listed in this Manual (**PTP**). This program shall be part of that **Subcontractor's** HASP. **DUSA** will require a **SHEMP**.
4. **STP** will maintain a log of all spaces on the project that are considered to be confined spaces. This log shall be updated each time a confined space is installed/fabricated/placed, etc. Upon completion of the project, the master list shall be transmitted to the **STP corporate safety manager.**
5. All confined spaces are to be labeled as such by **STP project management** (or the subcontractor). The label shall consist of a 'Danger' sign, notifying project employees of the presence of the confined space and the requirement for permitted entry.

C. Notifications

1. Entry into existing confined spaces (i.e. owned/operated by **WSDOT**) requires notification to the owner or his designee. It is expected that coordination between **WSDOT** and **STP** will take place prior to entry. This coordination must include a review of the hazard associated with the space, the contents of the space, the location of critical systems located in the confined space, as well as a review of the operations to take place inside the confined space. The **Project Safety Manager** shall be notified prior to any confined space entry.

D. Entry Requirements

1. The **Competent Person** shall require that all **Employees** involved in the confined space entry possess the knowledge and skill required to perform the duties for which they are assigned. In addition, a **PTP** shall be completed prior to the entry. At a minimum, the **PTP** and Confined Space Permit shall be used to conduct a pre-entry training and briefing for all crew members entering, attending, and/or supervising the confined space entry.
2. The Confined Space Permit shall include the following information (Confined Space Permit Form):
    a. Date;
    b. Identification (name) of the **Competent Person**, entrant(s), attendant(s), and supervisor;
    c. Location of the confined space and the reason for entry;
    d. Verification that the opening/entry point has been barricaded;
    e. Verification and description of lock out/tag out for all potential energy sources located within the confined space;
    f. Identification of required safety equipment (tripod/winch, ladders, etc.) and personal protective equipment to be utilized by the attendants/entrants;
    g. Identification of the atmospheric testing for percent Oxygen (%O_2), Lower Explosive Limit (LEL), Carbon Monoxide (CO) and other contaminants, including pre-entry and periodic testing;
    h. Identification of the physical, environmental, and health hazards associated with the confined space;
    i. The communication method(s) to be utilized between the attendant and the entrant(s), and between the attendant and emergency services;
    j. A description of ventilation requirements and methods used;
    k. Identification of rescue provisions, including phone numbers;
    l. Pre-entry notification requirements (WSDOT, local Fire Department, etc.)
    m. Identification of the cancellation time and post-entry notifications.
3. Air monitoring shall be conducted prior to initial entry. All air monitoring equipment must be calibrated within the specifications of the manufacturer, and must be current. Air monitoring shall be conducted for oxygen (first), lower explosive limit; carbon monoxide, and any other potential contaminant that may be encountered in the confined space. The following limits apply:
    a. Oxygen (O_2): Between **20.5% - 23.5%**.
    b. Lower Explosive Limit (LEL): **Less than 2%** (based on Methane as reference gas)
    c. Carbon Monoxide (CO): **17 ppm** (½ the OSHA PEL)
    d. Hydrogen Sulfide (H_2S): **5 ppm** (½ the OSHA PEL)
    e. Other Contaminants: **½ the OSHA PEL or NIOSH REL.**
4. The pre-entry air monitoring assessment must be conducted without entering the confined space (i.e. the meter must be capable of pumping air across the sensors). Air monitoring shall be conducted at the top (or entry point) of the confined space first, and then at the bottom and middle of the space to require that potential contaminants with varying vapor densities are assessed. If contaminant levels exceeding the criteria listed above are encountered, the confined space entry plan (PTP) and permit must be re-assessed. The source of the contamination must be identified and controlled, and the space must be ventilated. NOTE: Engineering controls are considered to be the primary choice for protection of **Employees** in confined spaces. Respiratory protection should be considered a secondary control, and should only be considered where engineering controls (e.g. ventilation) are found to be ineffective.
5. Periodic air monitoring of the space is required. For spaces with no known air quality concerns, the space shall be re-assessed following all breaks and changes in entry personnel, at a minimum. Continuous monitoring is required in spaces where known contaminants are anticipated or present.

6. The confined space entrant must:
    a. Be adequately trained in confined space entry requirements;
    b. Understand the potential hazards and hazard controls associated with the confined space, including physical and chemical hazards;
    c. Understand his/her role as entrant, as well as his/her assigned tasks;
    d. Comply with the safety provisions outlined in the PTP and Confined Space Permit are adhered to by all employees;
    e. Maintain communication with the attendant at all times;
    f. Evacuate the space immediately upon notification by the attendant;
    g. Notify the attendant and exit the space immediately whenever a symptom/warning sign of exposure is recognized, an unexpected hazard arises, or an alarm is sounded.
7. The confined space attendant must:
    a. Be adequately trained in confined space entry requirements;
    b. Understand the potential hazards and hazard controls associated with the confined space, including physical and chemical hazards;
    c. Understand his/her role as attendant, as well as his/her assigned tasks;
    d. Conduct periodic/continuous air monitoring of the space as required by the permit;
    e. Require that the safety provisions outlined in the PTP and Confined Space Permit are adhered to by all parties;
    f. Remain outside the confined space at all times and maintain communication with the entrants at all times;
    g. Order the evacuation of the confined space whenever a symptom/warning sign of exposure is recognized, an unexpected hazard arises, or an alarm is sounded.
    h. Summon the rescue team/emergency services when events warrant.
8. The confined space supervisor must:
    a. Be adequately trained in confined space entry requirements;
    b. Understand the potential hazards and hazard controls associated with the confined space, including physical and chemical hazards;
    c. Train all **Employees** involved with the confined space entry in accordance with Section D.1 above;
    d. Verify that all entrants and attendants understand their roles and responsibilities;
    e. Verify that air monitoring has been satisfactorily completed;
    f. Verify that communication methods, between both entrant/attendant and attendant/emergency services are functioning;
    g. Verify that rescue personnel are available and trained;
    h. Monitor the entry to require that the established procedures are adhered to.
9. Energy sources that pose potential risk to entrants shall be isolated, locked and tagged out in compliance with Section 7 – Control of Hazardous Energy (LO/TO). A description of the potential energy sources and the controls used to isolate the energy shall be listed in the PTP. Potential energy sources include electrical, pneumatic, hydraulic, steam, water, gas systems, etc.
10. Provisions for the rescue of entrants shall be made prior to entry. Non-entry rescue is the preferred means for retrieval (i.e. tripod/winch, etc.). Where non-entry rescue is not possible (due to the space configuration, opening size, number of entrants, etc.), provisions for rescue must be coordinated prior to entry. These provisions may include coordination with the local Fire Department if this service is expressly agreed to by both parties. Where the local Fire Department is not available for rescue, STP or the involved subcontractor is responsible for providing entry-rescue provision. Where 'in-house' rescue services are provided, these services shall comply with the criteria listed in 29CFR Part 1910.146 and WAC 296-62-50014.

Section 7 – Control of Hazardous Energy (LO/TO)

A. Definitions

1. Affected Employee. Any employee whose assigned job or task requires him/her to operate or use a machine/equipment/system on which servicing, testing, or maintenance is being performed under lockout/tagout, or one who is working in the area where such servicing, testing, or maintenance is being performed.
2. Authorized Employee. The person or persons who locks/tags out machines, equipment, circuits, or systems in order to allow servicing or maintenance on that system, and one who has been trained in accordance with this Section. The authorized employee is typically the controlling supervisor or **Foreman** responsible for overseeing any operation where the potential release of hazardous energy may occur.
3. Hazardous Energy. Energy, in any form, that when released in an uncontrolled or unexpected manner has the potential to cause injury or property damage. Hazardous energy forms include electrical, fluid systems (water, coolant, process chemicals, etc.), pneumatic, gaseous, thermal, and gravity (e.g. raised loader bucket).
4. Isolating Device. Any device that physically blocks or stops the flow of hazardous energy. Isolating devices include breakers, valves, piping blanks/blinders, key switches, lever arms, etc.
5. Lockout Device. Any device that, when installed over an isolating device or as an integral block/blank in a piping system, positively restricts the isolating device from being energized or activated.
6. Zero Energy. The state of a machine, equipment, circuit, or system where lockout/tagout has been performed and where there is no possibility of hazardous energy release.

B. General Requirements

The **Responsible Contractor** is required to develop a control of hazardous energy program, specific to the project, which meets or exceeds the OSHA/WAC standards and the guidelines listed in this Manual.

1. **STP** will develop a control of hazardous energy procedure, SHEMP, prior to the start of the project that meets OSHA and any other project specific requirements.
2. **STP** and each **Subcontractor** requiring employees to perform LO/TO be required to have a control of hazardous energy safety program, specific to that **Contractor's** operations, which meets or exceeds the guidelines listed in this Manual (**PT**P).
3. The LO/TO **Competent Person** shall require that all **Employees** involved in the operation requiring lockout/tagout possess the knowledge and skill required to perform the duties for which they are assigned. In addition, a **PTP** shall be completed prior to the operation.
4. At a minimum, all employees shall be trained in accordance with the requirements of this Section and the applicable **PTP** prior to commencement of the operation. The training shall include recognition of potential energy release sources, avoidance of energy release hazards, recognition of unsafe conditions that could potentially lead to the release of energy, types of lockout/tagout methods used for the operation, roles and responsibilities for affected and authorized employees, correct procedures for locking and tagging energized equipment/systems, and correct procedures for re-energizing systems and notifications.
5. Locks used to lock out energized machines/equipment/systems shall be keyed differently, and only one key shall exist for each lock. The key used to lock out equipment shall remain in the possession or under the control (i.e. in a key lock box) of the authorized employee until the system is re-energized.
6. Tags used to identify locked machines/equipment/systems shall be 'Danger'-type tags, and shall include the date, the name and phone number of the authorized employee, and the reason for the lock out.
7. Service on corded tools and equipment will be deemed to be in compliance if the cord is unplugged and is in the possession of the person conducting the servicing.
8. Where work on energized systems is required and necessary, the requirements outlined in Section 9.D shall be adhered to. NOTE: It is assumed that it is feasible and practical to

isolate, lock, and tag all hazardous energy sources, except those instances where continuity of service is essential to life and health.

9. Where isolation or lockout/tagout of WSDOT equipment or systems is required, prior approval shall be obtained.

C. Lockout/Tagout Procedure (Minimum Requirement)

1. Achieve Zero Energy:
   a. Identify and locate all sources of energy that could affect individuals involved.
   b. The authorized employee shall notify all affected personnel that the equipment is going to be de-energized and accessed.
   c. Isolate and disconnect the main source(s) of power by breaking the primary power circuit/valve/pipe, etc. NOTE: For electrical disconnects, require that all loads are shed from the circuit prior to de-energization.
   d. Isolate and disconnect each separate power source of multiple power systems (e.g. pneumatic over hydraulic, electric over fluid, etc.)
   e. Release all residual energy remaining behind the power source (e.g. pneumatic, fluid, hydraulic, electrical capacitor, batteries, springs, etc.)
   f. The authorized employee (controlling supervisor) shall secure all power sources in the de-energized position with the proper lockout device (e.g. lock, circuit breaker hasp and lock, valve hasp and lock, etc.). **Multiple locks will be required when more than one trade or group must work on the same de-energized system.** NOTE: All affected employees have the right to place his/her own lock on any de-energized system that he/she is required to work on.
   g. Each person who is protected by the lockout, or the authorized person, shall place a lock and tag on the source location.
   h. The person performing the lockout shall remain in possession of the sole key for that lock, and **shall only work on the de-energized/protected equipment.** The lock can only be removed by the individual that performed the lockout, and only at the completion of the work (as noted below).
   i. Test the equipment, prior to working on it, to require that all sources of energy have been isolated. This can be accomplished by attempting to energize the unit/system downstream of the isolating lock (i.e. at the unit), by electrically testing any circuits downstream, attempting to produce gas/water/steam flow in a line downstream of the isolating lock, etc. No systems should be worked upon until positive recognition of a 'zero energy state' is attained.
2. Re-Energization of the System
   a. Once the task has been completed, the authorized employee shall require that all tools have been picked up/removed, all safety chains, guards, guardrails, warning signs, etc., have been re-installed, and all repairs have been made appropriately.
   b. The authorized employee shall notify all affected persons that the lockout/tagout device is going to be removed.
   c. The authorized person shall remove the lock and tag only after the above items 2.a and 2.b have been completed.
   d. Restart the equipment and inspect for proper function.
3. Temporary Operation of a Locked Out Source
   a. The authorized person shall inspect the work area so that all personnel, tools, etc. are clear of the system.
   b. The authorized person shall notify all affected employees of the forthcoming system temporary energization ('system bump').
   c. The authorized person shall remove the lock from the system.
   d. The authorized person shall energize the system and conduct the 'bump' or system check.
   e. The authorized person shall immediately de-energize the system and replace the locks/tags.
   f. Inform all affected employees of the de-energization.

Section 8 – Demolition

A. Definitions

1. Demolition. Any activity that involves the removal of structural members, architectural finishes, or mechanical/electrical/plumbing systems for the purpose of permanent removal or preparation for future construction/renovation activities.

B. General Requirements

1. Demolition activities shall comply with the requirements of 29CFR Part 1926.850 through 1926.860 and WAC 296-155-775 thru 830 at a minimum.
2. The STP or subcontractor **Competent Person** shall require that all **Employees** involved in the demolition operation possess the knowledge and skill required to perform the duties for which they are assigned. In addition, a PTP shall be completed prior to the demolition operation. The PTP shall be reviewed with the work crews daily prior to the start of work, and where conditions change.
3. Smoking is prohibited throughout demolition areas.
4. Storage of flammable/combustible liquids and gases is prohibited in demolition areas.
5. Accumulation of combustible materials and demolition debris is prohibited. At a minimum, the demolition area(s) shall be cleared of combustible materials/debris at at the end of the shift and as needed.
6. All piping, pits, crawl spaces or other spaces that may contain flammable or combustible gases shall be purged prior to commencement of demolition activities (e.g. natural gas piping, oil/water separator pits, etc.).
7. Fire protection measures, in compliance with 29CFR Part 1926.150(c), shall be maintained throughout the course of demolition.

C. Hazardous Materials Survey

1. Prior to commencement of demolition activities, **STP** shall require that a hazardous materials survey has been conducted. Hazardous materials include, but are not limited to the following: asbestos-containing materials, lead-containing materials, PCB-containing oils (transformers, light ballasts, etc.), mercury-containing switches and light tubes (fluorescent light tubes), radioactive isotope-containing exit signs and door-closers, Halon (and similar) fire suppression systems, water-based fire suppression systems where the water is contaminated with cutting oils, CFC-containing refrigerants, grease-coated surfaces (kitchen hoods and ceilings), grease traps, floor sumps (oil contamination), oil transformers, containerized hazardous chemicals, storage tanks, batteries, laboratory fume hoods and associated ductwork, and laboratory waste discharge lines.
2. All hazardous materials shall be removed prior to demolition. Where hazardous materials cannot be removed prior to demolition (e.g. lead-coated surfaces), a plan shall be developed by **STP** or subcontractor that details the procedures to be used for the safe handling and disposal of the material(s). All hazardous materials that remain in the structure/demolition area during the demolition shall be clearly marked by the **Subcontractor**, signifying the presence of the hazard. This will be done so that effective recognition and communication of the hazard takes place.
3. A pre-demolition inspection of the structure/demolition area, specifically focused on hazardous materials, shall be conducted by the **Subcontractor** so that the listed material(s) have been removed. In addition, the **Subcontractor** shall obtain a letter from the firm(s) or entity(s) responsible for oversight of the abatement/remediation activities confirming the removal of the listed material(s). Demolition cannot begin until this letter(s) is received by **STP** and verified in the field.

D. Engineering Survey Report/Demolition Plan

1. Prior to commencement of demolition activities, an engineering survey shall be conducted by a qualified person. A written report shall be generated by the qualified person and submitted to the **STP** and demolition **Subcontractor** upon completion. This report/plan must be received by **STP** and demolition **Subcontractor** at least two weeks in advance of the proposed demolition commencement date.
2. **STP** must review this plan for thoroughness and accuracy, providing comments to the demolition **Subcontractor** and/or qualified person where appropriate.
3. The engineering survey report/demolition plan must, at a minimum, address the following items:
    a. Building characteristics including construction type, structure size, number of stories, height, structural hazards or instabilities, basement, confined spaces, party wall locations, etc.;
    b. Adjacent structures that may be impacted by the demolition activities and required provisions for protecting those structures;
    c. Existing conditions/damage survey of adjacent structures/areas. Any abnormal conditions or existing damages shall be documented/photographed and included in the engineering survey report;
    d. Detailed description of the sequence of demolition that requires structural stability throughout the entire demolition process, including identification of load bearing walls and elements;
    e. Temporary shoring and/or bracing procedures required during each phase of the demolition, including calculations;
    f. Maximum load-bearing capacities of the floors that will be loaded during the demolition operation. Calculations must be made so that the maximum potential live load imposed on the floor(s) by the **Subcontractor's** mechanical equipment or the dead load imposed by accumulated debris does not exceed the capacity of the floor(s);
    g. Public protection requirements including effective separation of the public from the demolition operation, re-routing of pedestrian or vehicular traffic, falling object protection, etc.;
    h. Debris removal methods and restrictions (e.g. debris chutes, floor openings, etc.) including protection for such;
    i. Dust suppression techniques to be employed during each phase of the demolition;
    j. Fall protection requirements, means, and methods;
    k. **Employee** access to demolition areas;
    l. Existing utility identification, including cut and cap verification;
    m. Identification and protection of utilities that must remain live or in service during the demolition operation. NOTE: Live utilities must be labeled in a manner that clearly identifies the status of the utility. This label must be of a type that will remain in place throughout the demolition operation (i.e. paper signs may not be appropriate);
    n. Verification of abatement/removal of hazardous materials, as described in this Section.

E. Pre-Demolition Walkthrough and Inspection

1. Prior to commencement of demolition, or prior to commencement of each new phase of demolition, a pre-demolition walkthrough of the structure/demolition area shall be conducted.
2. Required attendees for this walkthrough include the STP **Superintendent** (or his designee) responsible for the demolition, the **Project Safety Manager**, the demolition contractor's **Competent Person** and **Foreman** (or **Foremen**), and the demolition contractor's **Safety Representative**. The WSDOT representative may elect to attend this walkthrough.
3. The Pre-Demolition Walkthrough shall be documented by a checklist, showing that each person listed above is in agreement that all procedures and requirements are satisfactorily met. Demolition will not proceed until this checklist is complete and agreed upon.

Section 9 – Electrical Safety

A. General Requirements

1. All electrical work and practices shall comply with OSHA29CFR Part 1926.400 through 1926.449, WAC 296-155-426 thru 462, NFPA 70 – National Electric Code, NFPA 70E – Standard for Electrical Safety in the Workplace, and any municipal or state Electric Code. Where codes/regulations/requirements conflict, the more stringent guideline shall apply.
2. The **Responsible Electrical Contractor** will develop an electrical safety program, specific to the project, which meets or exceeds the guidelines listed in this Manual. This program shall become part of the HASP.
3. Each **Contractor** (STP or Subcontractor) requiring employees to use or install electrical equipment is required to have an electrical safety program, specific to that **Contractor's** operations, which meets or exceeds the guidelines listed in this Manual. This program shall be part of the **Project Specific** HASP.
4. The employer's **Competent Person** shall require that all **Employees** potentially exposed to electrical hazards possess the knowledge and skill required to perform the duties for which they are assigned. In addition, a PTP shall be completed prior to any operation, any electrical hazards shall be clearly identified, and hazard controls defined. The PTP shall be reviewed with the work crews daily prior to the start of work, and where conditions change.
5. Only qualified electricians shall perform work on electrical equipment, systems, or circuits.
6. The project electrical **Contractor** (or his lower-tier **Contractor**) shall be responsible for the safe installation, testing, and maintenance of all permanent and fixed temporary electrical services and components.
7. Each individual **Contractor** is responsible for the inspection, maintenance, and use of portable electric power tools, equipment, extension cords, welding machines, and welding leads.
8. Electrical equipment shall not be opened/serviced/repaired or otherwise handled until it has been de-energized, locked and tagged out, and verified to conduct zero energy. Verification of zero energy (voltage testing/metering) is considered energized electrical work.
9. Where work on energized systems is required and necessary, the requirements outlined in Section 9.D shall be adhered to. NOTE: It is assumed that it is feasible and practical to isolate, lock, and tag all hazardous energy sources, except those instances where continuity of service is essential to life and health.
10. Cable tuggers/pullers/winches:
    a. All cable tuggers/pullers/winches must be accompanied by the user manual. Operators must have read and understand the manufacturer's requirements outlined in the user manual.
    b. Only persons specifically trained and qualified shall operate cable tuggers/pullers/winches, etc.
    c. All rigging/ropes/chains/anchors, etc. used with cable tuggers/pullers/winches shall be rated to meet or exceed the maximum output force of the equipment being used. All equipment and rigging shall be inspected by the contractor's **Competent Person** prior to use. Defective or worn equipment shall not be used.
    d. All cable tugging/pulling/winching areas shall be cordoned off using danger tape and signs, or barricades while in operation in order to minimize the potential for injury in the event of a mechanical failure/line parting.
11. Any connection to or interruption of service of an existing building distribution system requires prior notification to and authorization by WSDOT or facility manager.

B. Lighting and Illumination

1. All areas within the construction site shall be illuminated to a minimum level of 5 foot-candles. First-aid stations, offices, office trailers, and shanties shall be illuminated to a minimum level of 30 foot-candles.
2. Temporary lighting shall not be suspended by its cord, unless it is specifically designed to do so.
3. All lamps/bulbs for general illumination shall be protected from incidental contact or damage using cages that fully encircle the lamp. Open-bottom protective cages are not allowed.
4. High intensity discharge (metal halide) fixtures, where used, shall be provided with a containment barrier that encloses the lamp, or provided with physical means that allows only Type O lamps.
5. High intensity discharge fixtures shall be cycled off at least once per week for fifteen minutes or at frequencies prescribed by the manufacturer, whichever is more stringent. The electrical **Contractor** shall maintain a log of cycle off times and dates.
6. All lighting fixtures, wiring, devices, and equipment subject to dampness or wet locations shall be weatherproof and approved for outdoor use.
7. All below grade structures shall have, at a minimum, illuminated exit signs (photo-luminescent acceptable)/emergency lighting packs located at each exit stair/ladder, at each level. Underground/Tunnel lighting is addresses in Section 34.
8. All temporary lighting wiring and fixtures must be removed upon completion of the construction.
9. Underground lighting is addressed in Section 34.

C. Temporary (Construction Use) Power

1. Ground Fault Circuit Interrupters (GFCI):
    a. All 125 volt 15, 20, and 30 amp temporary power receptacles shall be protected by a ground fault circuit interrupter (GFCI) at the receptacle.
    b. Receptacles other than 125 volt 15, 20, and 30 amp shall be protected by a GFCI either at the breaker or the receptacle.
    c. Portable electric power units (spider boxes) shall have a GFCI at the unit receptacle, and the cord supplying power from the outlet (or panel if hard wired) shall be SO type. The maximum length of power supply cords from the outlet to the spider box is fifty (50) feet. Spider box power cords shall be protected from vehicular and pedestrian traffic, and shall be routed so as not to pose a tripping hazard.
    d. Portable generators shall have GFCI protection at the receptacle.
    e. Permanent power receptacles used during construction shall require the use of a portable GFCI, plugged into the receptacle.
    f. Unless otherwise agreed, the electrical **Contractor** is responsible to inspect all project fixed temporary GFCI receptacles and breakers at least monthly. The inspection shall be documented, and an inspection log shall be maintained. NOTE: A dated/initialed inspection sticker placed on the receptacle or next to the breaker shall be considered to be compliant with this requirement.
2. Wiring Practices
    a. Underground temporary power feeds shall be in conduit, and further encasement analyzed. Direct burial of temporary power feeds, regardless of the wire rating, is not allowed. 'Buried Electric Line' detectable (i.e. metallic) warning tape shall be buried above the ductbank, no closer than twelve inches above the top of the ductbank. If the top of the ductbank is less than two feet below grade, a fixed warning system shall be placed at grade.
    b. Underground temporary power feeds shall be surveyed following installation. The location(s) shall be shown on a site plan or project utility drawing. A copy of this plan/drawing shall be maintained by **STP** and the electrical **Contractor**. If the ductbank is to remain following completion of the construction, the exact location shall be shown on the official project as-built drawings, and transmitted to WSDOT.

c. All temporary wiring shall be protected from accidental contact or damage either by its placement and its securing method against a wall or deck, or by physical protection (conduit, wood box, etc.). Temporary wiring shall be secured with non-conductive materials.
d. All receptacles shall be grounded. All metal panels, boxes, covers, conduit, etc. shall be grounded.
e. All wiring splices and repairs shall be made inside an approved box, or encapsulated/sealed with epoxy or vulcanizing insulation with an insulation value at least equal to that of the conductor. Open splices or open repairs using electrical tape alone are not acceptable. This applies to welding leads as well.
f. Receptacles shall not be installed on branch circuits that supply power to temporary lighting.
g. All holes, knock-outs, and unused openings in panels, boxes, cabinets, etc., including spaces where circuit breakers are missing, shall be effectively protected with approved covers. Electrical tape or cardboard is not acceptable.
h. NOTE: In order to avoid working on energized electrical systems, it is advised that electrical contractors responsible for temporary electric power design the temporary system (and sub-system) so that electricians can make up circuits outside of the panel (Example: Wire all circuits into a trough or junction box outside the panel, thus eliminating the need to remove the panel cover to add a new circuit; design and install temporary outlets so that they may be relocated as work progresses, without having to remove and re-install the outlet box and wiring back to the panel).

3. Access, Labeling and Signs
   a. Panels shall be locked to prevent unauthorized access. Danger signs shall be placed on the panel door warning project employees of the potential electrical hazard.
   b. Electric vaults, electric/switchgear/transformer rooms/cages/shacks, shall be locked to prevent unauthorized access. Danger signs shall be placed on the panel cover warning project employees of the potential electrical hazard.
   c. Receptacles shall be labeled or marked with permanent marker, showing the panel number/location and the breaker from which the receptacle is powered.
   d. Circuit breakers shall be labeled to show the receptacle/system/tool they control.
   e. Circuit breaker panels shall be labeled to show the voltage they contain, and the location from which power is fed to the panel.
4. Power Cords and Tools
   a. All power tools and extension cords must be grounded, unless double insulated.
   b. All power tools, equipment, and extension cords must be inspected for damage by the user prior to the tool's use. Any tool/equipment/cord found to be damaged shall be tagged and removed from service until repairs have been made, or discarded.
   c. Flexible cords shall not be routed through holes in the floor or wall. Where cords are routed through a door or window, protection shall be provided that prevents damage to the cord.
   d. Flexible cords, including portable electric power unit (spider boxes) cords shall not be run across a walkway, aisle, stair, or ladder entrance. Where it is necessary to cross a walkway, aisle, stair, or ladder entrance with a flexible cord, the cord must be suspended at least seven feet above the walking surface.

D. Energized Electrical Work

Energized electrical work shall comply with the requirements established in NFPA 70-E, Article 130. Energized Electric Work Permit may be used to satisfy the requirement of Article 130.1(A).

Section 10 – Environmental & Occupational Health

A. Definitions

1. Asbestos. A naturally occurring, mostly fibrous mineral that is durable and resistant to heat, fire, and many caustic chemicals. Because of these properties, asbestos and asbestos containing materials (ACM) are found in materials used as fireproofing, insulating agents, and many other building materials. Materials containing 1% asbestos or more by weight are regulated.
2. Chlorofluorocarbon (CFC). Any product containing ozone depleting refrigerants including, but not limited to, Chlorofluorocarbons (CFC) and Hydrochlorofluorocarbons (HCFC).
3. Combustion Units. Units including, but not limited to, boilers, heaters, emergency generators and kilns.
4. Emission Control Devices. A device installed on diesel-powered non-road construction equipment either included on the EPA Verified Retrofit Technology List (www.epa.gov/otaq/retrofit/retroverifiedlist.htm) or judged by WSDOT to be equivalent to the EPA standards.
5. Environmental Protection Agency (EPA). The federal agency responsible for protection of the environment.
6. Halon. The organic halide (bromotrifluoromethane, or Halon 1301) sometimes used as a gaseous fire suppression agent.
7. Hazardous Waste Generator (or primary Generator). Any person, by site, whose act or process produces identified or listed hazardous waste or whose act first causes a hazardous waste to become subject to regulation.
8. Incidental Spill. Any spill meeting all of the following criteria:
    a. Personnel are familiar with the hazards associated with the spilled material;
    b. Containment/response does not pose potential health and safety hazards (e.g. fire, explosion or chemical exposure);
    c. A small quantity (less than 10 gallons) of material is spilled/released which <u>DOES NOT</u> reach the environment or pose potential health hazards; and
    d. Spilled/released material can be readily absorbed, neutralized, or otherwise controlled at the time of release by employees in the immediate area or by maintenance personnel.
9. Lead-based paint (LBP). Any paint containing any measurable amount of lead. Under OSHA, lead-based paint is considered a potential health hazard to **Employees** involved in dust generating removal of lead painted building components.
10. Licensed Site Professional (LSP). The person responsible for the oversight, testing, and management of contaminated soils and groundwater .
11. New York City and/or State DEP). The New York city/state agency responsible for the protection of the environment.
12. Non-incidental Spills. Any spill that meets either of the following criteria:
    a. Major spills/releases (i.e. greater than 10 gallons) that do not reach the environment or

Any amount of spilled material that escapes to the environment (including drains, sumps, soil, etc.).

B. General Requirements

1. All **STP employees** and **Subcontractors** performing work on this project shall comply with all applicable federal environmental regulations (EPA, OSHA, etc.), state environmental regulations and local environmental regulations and ordinances (as appropriate) as well as the **WSDOT**-specific guidelines and specifications outlined in the following Sub-Sections.
2. The requirements included in the following Sub-Sections have been developed to aid **Dragados Managers** and **Subcontractors** in navigating through relevant environmental regulations and potential environmental issues that may arise over the course of construction, therefore helping to minimize the overall impacts to the environment and the general public. Where codes/regulations/requirements conflict, the more stringent guidelines shall apply.

3. Where an **Employee** is potentially exposed to contaminants by inhalation, ingestion, absorption, or injection, the **Employer** shall show through either an initial or negative exposure assessment that over-exposure has not taken or will not take place. The exposure assessment shall be documented, and the exposure assessment records shall be retained in the project files. The following shall be documented, at a minimum:
    a. Contaminant(s) of concern and their associated permissible exposure limits;
    b. Date of exposure assessment;
    c. Description of the operation for which the contaminant is assessed;
    d. Engineering controls in place during the assessment period;
    e. Administrative controls in place during the assessment period;
    f. Personal protective equipment worn or used by the employees;
    g. Biological monitoring results (pre and post-assessment);
    h. Environmental conditions during the assessment period;
    i. Collection method(s) (i.e. sampling method or test method);
    j. Analysis method(s);
    k. Analysis result(s);
    l. Comparison of contaminant analysis to the protection factor(s) for the personal protective equipment used;
    m. Employee notification method(s).

C. Air Emissions

1. Construction Vehicle Emissions
    a. All motor vehicles and construction equipment shall comply with all pertinent local, state and federal regulations covering exhaust emission controls and safety.
    b. Diesel-powered non-road construction equipment with engine horsepower (HP) ratings of 60 HP and above, which is located or used on the project for a period in excess of 20 working days, may need to be retrofitted with Emission Control Devices in order to reduce diesel emissions. (Defined in contract documents)
    c. All diesel fuel used on the project site must be ultra low sulfur diesel which contains no more than 15 parts per million (ppm) sulfur (defined in contract documents).
    d. The **Project Manager** should submit monthly reports, as required, to WSDOT, updating the list of non-road diesel-powered construction equipment and the emissions control devices installed on that equipment. The report should also include the quantity of diesel fuel used and any addition or deletion of non-road diesel equipment shall be indicated in the report (Defined in contract documents).
    e. **STP** and **Subcontractors** shall use methods to control nuisance odors associated with diesel emissions from construction equipment including the following: turning off diesel combustion engines on construction equipment not in active use, and on trucks that are idling while waiting to load or unload material for five minutes or more, as stipulated in the State anti-idling law (exceptions include: vehicles being serviced, vehicles making deliveries that need to keep their engines running, and vehicles that need to run their engines to operate accessories); locating diesel equipment away from the general public and sensitive receptors (e.g., fresh air intakes, air conditioners and windows).
    f. **STP** and all **Subcontractors** will maintain all equipment, trucks and other vehicles in such a manner as to minimize pollutant emissions.

D. Asbestos Identification and Abatement

1. Structure owners and managers are required to maintain ACM in good repair to prevent the release of asbestos fibers, or if disturbance of ACM for repair purpose must take place, activities are required to adhere to current asbestos regulations.
2. STP **Project Manager** should notify WSDOT prior to initiating any construction, renovation, and/or demolition work. WSDOT should provide a specific asbestos inspection report for work in those areas in question identifying, before work is begun, the presence, location, and quantity of asbestos-containing or potentially asbestos-containing materials (ACM) that would be specifically impacted by the pending work of the contract.
3. Prior to commencement of the work, the **Contractor** shall make all required notifications and secure all required permits for asbestos abatement activities.
4. The abatement **Contractor** will be responsible to pre-abate all identified asbestos containing materials in accordance with all applicable regulations.
5. Asbestos **Contractors** shall coordinate with the STP **Project Manager** for specific requirements regarding asbestos abatement work.
6. The abatement **Contractor** shall not disturb, damage, or otherwise handle any suspect asbestos-containing materials unless such activities are part of its contracted work and the **Contractor** is specifically trained to conduct asbestos abatement work.
7. Asbestos waste shall be handled and managed in accordance with all federal, state, and local regulations and ordinances. The **Contractor** shall coordinate with the STP **Project Manager** for disposal of asbestos-containing waste.
8. The following suspect materials are assumed to contain asbestos, until analytical data shows otherwise:
    a. Acoustical and decorative plaster
    b. Adhesives
    c. Base flashing
    d. Boiler, breeching, and pipe insulation
    e. Bridge bearing pads
    f. Caulking/putties
    g. Ceiling tiles and lay-in panels
    h. Cement pipes and cement wallboard
    i. Chalkboards
    j. Cooling towers
    k. Electrical panel partitions, electrical cloth, and wiring insulation
    l. Elevator equipment panels and brake shoes
    m. Fireproofing materials, including gaskets, fire blankets, fire curtains, fire doors, etc.
    n. Flooring backing, construction mastics, and asphalt floor tile
    o. Heating and electrical ducts
    p. HVAC duct insulation, flexible fabric, and flexible fabric connectors
    q. Lab hoods, benches and gloves
    r. Packing materials (wall/floor penetrations)
    s. Roofing shingles and felt
    t. Spray-applied and blown-in insulation
    u. Taping, spackling, and joint compounds
    v. Textured paints/coatings
    w. Thermal paper products
    x. Vinyl sheet flooring and floor tile
    y. Vinyl wall coverings
    z. Wallboard
9. **STP Project Manager** must, within 24 hours, convey to WSDOT any information they newly discover concerning the presence, location and quantity of asbestos-containing or potentially asbestos-containing materials.

E. Dust Control

1. Engineering controls will be implemented to help prevent airborne transmission of dust, mists, and vapors at all times, including nonworking hours, weekends, and holidays. The **Responsible Contractor** shall treat all on-site soil that is disturbed by the operations, including stockpiled material, with wet suppression or other means to control dust in accordance with the applicable specifications and drawings that are included in the contract documents.
2. Trucks will be cleaned upon leaving the site and entering paved public streets of all mud and dirt clinging to the vehicle body and wheels. Runoff will be managed from equipment/wheel washing.
3. Trucks will be loaded when arriving at and leaving the site in a manner that will prevent the dropping of materials or debris onto any public way.
4. Transport equipment and loose materials will be covered so that materials do not become airborne during transit. Spills of materials in public areas will be removed immediately.

F. Groundwater Management

1. **STP** shall maintain groundwater levels within the allowable range, as per contract documents and permits. STP will monitor groundwater levels before and during construction on a routine basis, as necessary to confirm compliance.
2. The discharge of pumped groundwater shall be performed in accordance with all required federal, state, and local permits and approvals. It shall be done in a manner that will not impact the environment, cause nuisances, or create safety concerns to the neighborhood.

G. Hazardous Materials and Hazardous Waste Management

1. Hazardous Materials
   - **a.** Each **Contractor** is responsible for the proper removal and disposition of all surplus chemicals (e.g., paints, lubricants, and cleaning products) that they bring on-site as part of the work. No **Contractor** shall use any drain, pipe or plumbing fixture for the disposal of any waste materials. No chemicals that a **Contractor** brings on-site shall remain on jobsite property at the completion of the work (unless authorized by WSDOT in writing).
   - **b.** **STP** shall review all contract documents (specifications, drawings, referenced reports, etc.) for the presence and locations of the hazardous materials that have been identified by the Owner or Owner's representative (e.g., asbestos, lead-based paint, oil, etc.). **STP** shall retain/subcontract the appropriate trained personnel to pre-abate all identified hazardous materials that are scheduled to be impacted by the work in accordance with the applicable specifications and drawings included with the contract documents.
2. Hazardous Waste
   - a. **STP** will manage all hazardous waste in accordance with all applicable federal, state, and local regulations, including but not limited to the State Hazardous Waste Regulations and the Comprehensive Environmental Response, Compensation and Liability Act (CERCLA).
   - b. Hazardous waste generated by a **Subcontractor** as part of its work is the responsibility of that **Subcontractor**.
   - c. The **Contractor** shall have primary generator responsibility for all such hazardous waste, except for waste that is abated from WSDOT property (e.g., lead paint, asbestos, contaminated soil).
   - d. **STP** will develop a Hazardous Waste Plan as needed that identifies all procedures for the safe handling of hazardous waste. The Hazardous Waste Plan shall describe the responsibilities related to hazardous wastes and shall include, but is not limited to

the following: identification of those wastes classified as hazardous waste in accordance with all applicable regulations; proof of registration with EPA and/or DEP as a generator of hazardous waste and/or waste oil; and certification of appropriate hazardous waste training for all **Employees**. The Hazardous Waste Plan will be under separate cover from the Project-Specific HASP.

e. The **Superintendent** will establish hazardous waste storage area(s) designated to safely store hazardous wastes. The **Project Safety Manager** shall visually inspect these areas weekly and document the inspections in an on-site log. The area shall be equipped with adequate signage, secondary containment, and an appropriately sized and compatible spill kit.

f. Containers of hazardous waste shall be properly labeled, stored on a secondary containment device, maintained in good condition and kept closed at all times.

g. Each **Contractor** (STP/Subcontractor) shall be responsible for coordinating the shipment of all hazardous waste where they have Generator responsibility, including signing all hazardous waste manifests. A copy of all hazardous waste manifests shall be provided to the **Project Manager**. The **Project Manager** will provide the **WSDOT** with copies of all manifests for hazardous waste shipped under the WSDOT EPA ID number. The **WSDOT** representative must sign all related manifests.

3. Transporting Hazardous Materials and Hazardous Waste

a. Only **Contractors** licensed to transport hazardous materials/waste shall be permitted to transport hazardous materials/waste. Transportation of hazardous materials/waste shall comply with US DOT regulations and requirements.

b. At no time shall the **Contractor** transport hazardous materials via public or private roads in a manner that could result in an unsafe condition for personnel or the environment.

c. Transportation of hazardous materials shall be conducted in accordance with all applicable regulations for proper packaging, marking/labeling, handling, and documenting.

d. **WSDOT** and each **Generating Contractor** are responsible for ensuring that proper shipping papers (bills of lading or hazardous waste manifests) accompany shipments of hazardous materials and that a 24-hour emergency contact is available to address transportation related emergencies.

H. Lead Paint Abatement

1. Unless **WSDOT** provides a specific lead-paint inspection, the **STP** shall assume that any painted surface they come in contact with is coated with lead-based paint, except where the paint was installed by a **Contractor** as part of the work and the paint is known not to contain any level of lead.
2. No **Contractor** should perform any intrusive, dust-generating work (e.g., drilling, cutting, sanding, and brazing, scraping, demolition) on painted surfaces unless the surface has been confirmed to be non-lead or unless such work is part of the contracted work and they are specifically trained to do so.
3. Any painted surfaces that have loose, flaking, chipping, or otherwise non-intact paint should not be impacted by the **Contractor** and should be reported to **WSDOT** immediately.
4. Lead paint abatement **Contractors** shall coordinate with the STP **Project Manager** for specific requirements for lead abatement work, including procedures for containerizing, testing and shipping LBP.

I. Soils Management

1. **STP** and all **Subcontractors** will comply with all applicable federal, state, and local regulations and ordinances regarding the excavation and off-site management of soils removed during the course of their work. Each **Contractor** is highly encouraged to re-use soils in the work area, if practical.

2. If the **Subcontractor** determines that the work involves the excavation and off-site management of soils, the **Subcontractor** must first coordinate with the STP **Project Manager** for the proper characterization and management of soils. A pre-characterization plan may be necessary to characterize the soils prior to excavation. Preparation and implementation of this plan must be under the direction of a Qualified Person.
3. Prior to excavation, the **Subcontractor** shall determine the off-site disposal/recycling facility for the soils. STP **Project Manager** should contact **WSDOT** for any listing of approved soil management facilities. Those facilities should be given priority. Should the **Contractor** identify another suitable facility which is not identified on this list, **STP** should obtain prior approval of the facility by **WSDOT**.

J. Spill Prevention, Control, and Response

1. Spill Prevention
    a. Based on the inventory of oil and hazardous chemicals that will be brought on-site, the **Superintendent** shall have available equipment (e.g., secondary containment pallets, absorbent pads, absorbent booms, speedy-dry) that is suitable and sufficient to control a potential spill/release.
    b. Prior to the work, the **Superintendent** is responsible for identifying conveyances to the environment (e.g., sumps, storm/floor drains, etc.) and adequately minimizing spill potential to these areas through protection, diking, etc.
    c. STP and each **Subcontractor** is responsible for the proper storage and labeling of all flammable and combustible chemicals that are brought and/or stored on site to complete the work. Such storage may require the use of safety containers, safety cabinets, and/or secondary containment. Each **Subcontractor** shall also require that any incompatible chemicals are safely segregated. Each **Contractor** is responsible for maintaining and securing all chemical containers and all chemical storage areas. This requires selecting locations and methods to minimize exposure to rainfall, surface water, and the ground surface or subsurface. Enclosures, shelters, and secondary containment should be used where appropriate. The STP **Project Manager** has final approval (**WSDOT** may be informed as per contract documents)
    d. Each **Subcontractor** must use appropriate protective procedures such as double containment, employee training, overflow protection, and other measures as part of activities involving the use, storage, or handling of petroleum products, chemicals or other hazardous materials on Jobsite Property.
    e. Each **Subcontractor** shall require that employees are adequately trained in spill control and response procedures (PTP) as outlined in the following Sub-Section.
2. Spill Control and Response
    a. In the event of a release or spill of oil or hazardous chemicals, the **Subcontractor** must follow all of the reporting requirements of the **STP** Project Site..
    b. The **Subcontractor** shall extinguish all sources of ignition and isolate incompatibles or reactive chemical substances.
    c. The **Subcontractor** shall determine if the spill/release is incidental or non-incidental (refer to Section 10A – Definitions).
    d. For incidental spills/releases **STP** or the responsible **Subcontractor** shall conduct the following: attempt to stop or contain the spill/release at the source provided that doing so does not endanger anyone; prevent discharge of materials to environmental receptors including drains, sumps, soil, etc.; immediately notify STP **Project Manager** of all incidental spills/releases; and be responsible for the proper collection, storage and disposal of waste materials in compliance with EPA/DEP regulations, in cooperation with **WSDOT**.
    e. For non-incidental spills/releases the **Subcontractor** shall: immediately report the spill/release to the STP **Project Manager**, who will in turn notify **WSDOT**; and follow the steps for incidental spill/releases identified in Section 10.J.2.d above, provided that it is safe to do so.
    f. If it is deemed necessary to engage a professional spill cleanup company, **STP** will coordinate the cleanup with **WSDOT**.
    g. **STP** will coordinate, with **WSDOT**, all reporting to outside agencies and will conduct follow-up written notifications, if necessary. This does not infer that STP is the Potentially Responsible Party.
    h. STP will conduct an incident investigation and coordinate with **WSDO**T on any actions that are required to prevent recurrence.

K. Storage Tanks (Above Ground and In Ground)

1. Permitting for Storage Tanks
   a. The **Contractor** requiring use of the tank must be properly licensed and is required to perform the work and obtain the appropriate permits in accordance with all applicable federal, state, and local regulations and ordinances governing work involving the permitting of aboveground and underground storage tanks.
   b. Aboveground storage tanks and associated piping shall be properly installed and permitted in accordance with, but not limited to, State Fire Prevention Regulations.
   c. Underground storage tanks and associated piping shall be properly installed and permitted in accordance with, but not limited to, State Fire Prevention Regulations, the manufacturer's instructions, and the "Petroleum Equipment Institute Publication RP100-97, Recommended Practices for Installation of Underground Liquid Storage Systems."
   d. Prior to installation, the **Contractor** will require that a permit has been obtained from the Governing Agencies and/or the local Fire Department for heating oil tanks associated with fuel burning equipment.
   e. If the quantity of light or heavy fuel oil exceeds 10,000 gallons, the **Contractor** shall require that an application for registration and license has been submitted to the Governing Agencies, the local Fire Department, and/or the License Commission.
   f. For gasoline and diesel fuel, the **Contractor** shall require that a tank registration/permit has been submitted to the appropriate Governing Agencies and the local Fire Department.
   g. Design documents, including plans, schematics, notifications and permit applications, related to USTs must be submitted to the STP **Project Manager** who will review the submittals for compliance **WSDOT** permits and policies.
   h. The **Contractor** shall submit final closeout ("as-built") documents to the STP **Project Manager** upon completion of the work.
2. Above Ground Storage Tanks (ASTs)
   f. Where possible, tank-mounted suction-type pumps should be employed to prevent and minimize leaks from valves and fittings.
   g. Tanks should not be located directly under building eaves where they may be subject to falling snow or increased external damage from dripping water.
   h. To prevent and minimize oil spill and overfill, tanks shall have, at a minimum, one or some combination of the following: an audible high level alarm activated by a float switch at a specified fill level; a valve located within fill pipe access to close automatically at a specified fill level; a direct reading level gauge at the tank, which is visible from the fill pipe location; or secondary containment, capable of containing 110% capacity of the tank.
   i. The tank systems shall have properly sized vent for emergency pressure relief.
   j. The tank should be protected from vandalism, collision and accidental damage if the unit has to be placed outside a building. This is generally accomplished with jersey barriers, bollards, or fences around the tank(s).
3. Underground Storage Tanks (USTs)
   f. USTs shall be constructed of double-walled fiberglass-reinforced plastic (or equally protective compatible material suitable for the tank contents) in compliance with "Underwriters Laboratories Standard 1316; Standard for Glass-Fiber-Reinforced Plastic – Underground Storage Tanks for Petroleum Products," or "American Society of Testing and Materials Standard D4021; Standard Specification for Glass-Fiber-Reinforced Polyester Underground Petroleum Storage Tanks."
   g. To minimize the risk of UST piping corrosion, piping systems shall be installed in accordance with American Petroleum Institute-API Recommended Practice 1632.
   h. Tanks shall be provided with overfill, and leak detection systems capable of minimizing the risk of oil spills. This means at a minimum, one or some combination of the following: A device which shall automatically shut flow into the tank when the tank is no more than 90% full; a device which shall alert the individual delivering

product when the tank is no more than 85% full by restricting the flow into the tank or triggering a high-level alarm; and/or a continuous in-tank leak detection system installed in accordance with the manufacturers instructions and capable of detecting a leak or discharge of 0.20 gallons per hour with the probability of detection of 0.95 and a probability of false alarm of 0.05 as determined by an independent testing laboratory using the EPA Standard Test Procedures for Evaluating Leak Detection Methods (EPA/530/UST-90/004 through 010) or other equivalent test procedures.

i. The storage of chemicals in a Tunnel area are defined in Section 34.

L. Storm Water Management

1. **STP** will review and comply with any storm water permits that have been obtained by **WSDOT** prior to the start of work as required by contract. As part of the requirements for the Construction General Permit, the **STP** shall file a Notice of Intent (NOI) as well as comply with the conditions set forth in the site's Storm Water Pollution Prevention Plan (SWPPP). STP will be responsible for conducting regular site storm water inspections as prescribed in the contract and further outlined in the applicable specifications and drawings included in the contract documents. The following items shall be inspected during the course of Work:
   a. Post the EPA Permit Number or the Notice of Intent (NOI) form and the name of site contact person at the entrance to the construction site.
   b. STP will provide a copy of the completed NOI and the Storm Water Pollution Prevention Plan (SWPPP) to **WSDOT** as required..
   c. The SWPPP is available on-site and is up-to-date.
   d. Work performed must adhere to the sequence of soil activities identified in the SWPPP.
   e. STP will report releases of hazardous substances to WSDOT who will evaluate the release and provide notification to EPA and/or DEP, if applicable.
   f. STP will demonstrate that inspections of storm water control measures and discharge points are being performed by qualified personnel as stated in the SWPPP.
   g. When an inspection indicates an amendment to the SWPPP is necessary, **STP** will revise the SWPPP within 7 days of the inspection and provided updates to WSDOT as required.

   In addition, the Responsible **Contractor** must require the following:
   h. Disturbed areas have been stabilized.
   i. Storm drains have been protected.
   j. Materials stockpiles have been stabilized or isolated.
   k. Sediment/debris is not present or visible at drains or discharge locations.
   l. There is no evidence of sediment or loose gravel from site entrance onto the street.
   m. Chemicals or oils are not stored near storm drains/discharge locations/surface waters.
   n. BMPs (e.g. filter fabric, hay bales, silt fencing) are adequately maintained.
   o. Sediment ponds/traps are not filled beyond half capacity.

   Upon completion of work, the **Contractor** must file for a Notice of Termination (NOT) and provide all associated documentation to WSDOT as required.

M. Wastewater Management

1. To the extent required by contract, STP will identify all wastewater streams for WSDOT and obtain, or assist in obtaining, approval for appropriate discharge permits.
2. The discharge of any wastewater must adhere to these permit requirements and all other specific requirements which include but are not limited to the following:
    a. No discharge of PCBs;
    b. No discharge of mercury, silver or other metal-bearing wastewater;
    c. No discharge of highly corrosive substances (pH < 5 or pH > 10.5);
    d. No discharge of oils, fats, and greases above 300 milligrams per liter (mg/L); and
    e. No discharge of flammable materials that could create a hazard for waste water treatment works personnel.
3. Each **Contractor** shall at all times protect excavations, trenches, buildings and materials, from rain water, ground water, backup or leakage of sewers, drains and other piping, and from water of any other origin and shall remove promptly any accumulation of water. Each **Contractor** shall provide and operate all pumps, piping and other equipment necessary to this end.
4. Wastewater discharges shall comply with the discharge regulations of the municipality responsible for the area. Discharge of wastewater to the on-site waste disposal systems must be approved, in writing, by WSDOT.

N. Water Use

1. No user shall knowingly allow water to leak or run to unnecessary waste.
2. Every user of the public water system or private water mains shall be subject to all federal, local and state regulations, as they apply, and to any established permits, charges, rates, fees and assessments. Where regulations contain conflicting requirements, the most stringent requirements shall apply.
3. Purified water from the public water system or private water mains shall be protected from potential hazardous contamination through proper connections to the piping network. Required protection may include installation of a backflow preventer under certain conditions.
4. STP will not operate any hydrants, valves, curb stops or corporations, nor shall they draw any water from the system, without specific approval of the local authorities responsible for such use. Only local authorities will operate valves, hydrants, corporations and curb stops unless otherwise directed by the local authorities.
5. Water service and use may be further restricted under emergency conditions (e.g., drought, hurricane, flood) that may endanger the adequacy of supply and/or the public health, safety and welfare of the surrounding community.

Section 11– Equipment Safety

A. Definitions

1. Critical Lift. Any hoisting operation where the load weight exceeds 85% of the lifting device's net capacity, where hoisting over a publicly-occupied structure, where two lifting devices are used in tandem to hoist a load, or where non-standard rigging practices are employed.
2. Gross Capacity. The capacity of a lifting device, **excluding** the weights of the main hook block, auxiliary hook/block, slings and rigging, main/auxiliary wire rope from boom tip to block, the stored jib weight, and the auxiliary boom head.
3. Net Capacity. The capacity of a lifting device, **inclusive** of the weights of the main hook block, auxiliary hook/block, slings and rigging, main/auxiliary wire rope from boom tip to block, the stored jib weight, and the auxiliary boom head.
4. Operator. The person(s) whose position/title/task assignment requires that he/she operate or control a piece of equipment or tool.
5. Rigger. The person responsible for configuring and rigging a load to be hoisted, as listed in Section 11.C below.
6. Signal (Tag)-Person. The person responsible for handling a hoisted load, whether through physical contact, or communication with an equipment operator, as listed in Section 11.C below.

B. General Requirements

1. At a minimum, the use of equipment and tools shall comply with the recommendations and requirements for safe use, as set forth by the manufacturer, or with the requirements set forth in this Manual, whichever is more stringent.
2. **STP** shall require that the user's manual for all equipment and tools shall be readily available at the project site. For equipment/tools where this manual can be found on the manufacturer's website, this will suffice in meeting this requirement.
3. The employer's **Competent Person** shall require that all **Employees** potentially exposed to hazards associated with the use of equipment and tools possess the knowledge and skill required to perform the duties for which they are assigned. In addition, a PTP shall be completed prior to any operation, any equipment hazards shall be clearly identified, and hazard controls defined. The PTP shall be reviewed with the work crews daily prior to the start of work, and where conditions change.
4. It is the responsibility of each **Contractor** to require that all types of equipment are inspected prior to use, as recommended by the manufacturer. It is the responsibility of the user of the equipment or tool to conduct an inspection of the tool prior to its use, regardless of previous inspections. Damaged equipment and tools shall be tagged out and removed from service, and shall not be used until repairs have been made.
5. STP will develop and implement a pre-entry inspection program for all types of motorized equipment, including motor vehicles utilized for project activities. Each piece of equipment shall be inspected by the **Project Safety Manager** or his designee, and an inspection sticker or report will be placed onto the equipment, in a visible location. At a minimum, the inspection shall document the presence/functionality/condition (if applicable) of the emergency brake, rollover protection, falling object protection, machine guarding, exhaust scrubber, steps to cab or engine, turn signals, lights, backup alarm, windshield/glass condition, anti-two block device, load chart, cable condition, drums/sheaves/sheave pins/pulleys, fire extinguisher, seat belts, as well as manufacturer listed safety items. The inspection sticker/report shall show the date of inspection and the name, company, and title of the inspector.
6. Fall protection is required for all maintenance/set-up activities where **Employees** are exposed to falls of greater than six feet.

C. Cranes and Hoisting Equipment

1. General Requirements
    a. At a minimum, the use, inspection, set-up, and maintenance of cranes and hoisting equipment shall comply with 29CFR Part 1926.550, WAC 296-155 PART L, ANSI B30.5, and the manufacturer's recommendations and requirements.
    b. The hoist path for all hoisting operations shall be pre-determined, and coordinated with the project **Contractors** to require that adequate clearance is given around hoisting operations. This is the responsibility of the **STP project management**, in coordination with the **Crew/Contractor** performing the hoisting operation.
    c. No load shall be hoisted above any site personnel or critical equipment (e.g. storage tanks, emergency generators, etc.).
    d. All cranes, including main and auxiliary lines, and pile driving hoist lines, shall have an anti-two block device attached. The anti-two block device shall be tested prior to each shift, as part of the equipment inspection.
    e. All loads shall have tag lines attached in order to control the load, unless it is determined that tag lines pose a greater risk to the safety of the load (i.e. entanglement of the tag line). NOTE: It is assumed that tag lines are feasible, and that entanglement hazards can be minimized through coordination of the hoisting path.
    f. Tag lines shall consist of a minimum 5/8" rope, and shall be free of knots. Tag lines shall be of sufficient length to maintain control of the load where there is any potential for striking either the boom or a fixed object or the shifting of the load could cause hand injury.
    g. Suspended loads shall not be left unattended.
    h. Clear communication between the operator and the signal person shall be maintained at all times during hoisting operations. The method(s) of communication shall be pre-determined and agreed upon by the operator and signal-person. Only one signal person shall signal a crane at a time.
    i. The erection, jumping, and dismantling of tower and gantry cranes of all types requires a written procedure, compliant with the manufacturer's recommendations and requirements. This procedure must be submitted to the **STP Project Manager** and **Project Safety Manager** for review and approval prior to commencement of activities.
2. Pre-Lift Considerations
    a. Operators of cranes and motorized hoisting equipment shall possess an appropriate license for the type of equipment that they operate. Any crane operator on site shall possess a certification for the type of crane that he/she operates. Documentation of these licenses/certifications shall be submitted to the **Project Safety Manager** prior to the use of the hoisting equipment.
    b. All hoisting activities, other than critical lifts, require the completion of a Crane Hoist Plan. The Crane Hoist Plan shall be submitted to the **Project Safety Manager** as part of the PTP for the operation. At a minimum, the items listed in **Crane Hoist Plan Form**, shall be addressed.
    c. All hoisting activities that meet the definition of a Critical Lift require the completion of a Critical Lift Plan. The Critical Life Plan shall be submitted to the **Project Safety Manager** as part of the PTP for the operation. At a minimum, the Critical Lift Plan shall address the items listed in Appendix I – Critical Lift Plan Form.
    d. No hoisting operation shall be permitted when wind gusts or sustained winds are equal to or greater than thirty five (35) MPH, or when they exceed the manufacturer's recommendations, load chart, or Critical Lift Plan, whichever is more stringent.
3. Set-Up

a. Cranes and hoisting equipment shall be set up on a firm, supporting surface. This surface shall be in compliance with the manufacturer's recommendations for the type of equipment and configuration used.
b. Cribbing shall be placed beneath the outriggers of all cranes. Cribbing shall be at least three (3) times the size of the outrigger pad, and shall consist of solid members. No voids shall be present beneath the cribbing.
c. No crane shall be permitted to set-up or operate within ten (10) feet of an overhead, energized electrical line.
d. The crane or hoisting equipment shall be level within one (1) degree, or within the manufacturer's specifications, whichever is more stringent. The levelness shall be rechecked at least three (3) times during the course of the work shift. If during any of the levelness inspections, the crane or hoisting equipment is out of level greater than one (1) degree, the hoisting operation shall immediately halt, and the cause shall be determined and rectified. Re-leveling the outriggers alone is not considered an appropriate response.
e. The swing radius shall be free and clear of obstructions, and shall be cordoned off using either danger tape or high-visibility flagging and signs.

4. Inspection
   a. Each crane, including pile driving rigs, shall have been inspected within the last year by a certified, independent testing agency. The inspection shall be submitted to the **Project Safety Manager** prior to its use on site. **For lattice-boom, tower, or gantry-type cranes, this inspection shall be completed <u>after</u> the crane's set-up on the project.**
   b. Each crane or hoisting equipment shall be inspected by the operator after set-up and prior to its initial lift, before each shift, and after any malfunction. This inspection shall, at a minimum, comply with the manufacturer's inspection guidelines, and shall be documented. All inspection documentation shall be maintained on the project.
   c. If a near miss, incident, or unplanned event occurs at any time during the course of work, the hoisting operation shall halt, and the crane or hoisting shall be re-inspected. If crane tipping, shock-loading, side-loading, boom contact with any object, or drum/sheave binding occurs, the crane shall be taken out of service, and re-inspected by a certified, independent testing agency.
5. Load Rating and Capacity
   a. The load weight shall not exceed Eighty five (85) % of the crane's net capacity, considering the boom length, angle, and load radius. For hoisting operations that will exceed this capacity, a Critical Lift Plan must be completed.
   b. Computerized or electronic capacity-indicating or load-indicating devices, whether integral to the crane or not, shall not be used to determine the capacity of the crane. These instruments shall only be used to verify and confirm the capacities listed on the load chart.
   c. The crane's capacity shall be determined using the shortest tipping access (i.e. over the side) that will be will be encountered during the hoisting operation. The Crane Hoist Plan shall reflect this.
   d. The use of any outrigger configuration other than fully-extended is not allowed unless the manufacturer specifically allows otherwise, and a load chart is supplied for the configuration. Where outriggers are used in other than the fully-extended position, and where the manufacturer does not recognize its use, capacities shall be based on the 'on-rubber' load rating.
   e. Where actual boom length falls between lengths shown on load chart, the Crane Hoist Plan shall be based on the next **longer** boom length.
   f. Where actual boom angle falls between angles shown on the load chart, the Crane Hoist Plan shall be based on the next **shorter** boom angle.
   g. Where the actual load radius falls between the radii shown on the load chart, the Crane Hoist Plan shall be based on the next **longer** load radius.
6. Operator Responsibilities

a. The operator is responsible for proper crane mobilization, set-up, inspection, use, and requiring that the crane's capacity is within the tolerances prescribed above.
b. The operator must be involved in the pre-planning effort, including information required to complete the Crane Hoist Plan/Critical Lift Plan. The operator shares in the responsibility to see that the load(s) are properly rigged, the hoisting path is clear, and the communication from/to the tag person is clear and understood.
c. The operator must not engage in any activity that may divert his/her attention from the hoisting operation (e.g. talking on a cellular phone, etc.).
d. The operator is responsible to immediately halt the hoisting operation if any condition or circumstance presents itself that may jeopardize the safety of personnel or property, or the integrity of the crane or hoisting equipment.

7. Rigger Responsibilities
   a. The rigger is responsible for the daily inspection of rigging equipment, and for the proper configuration/use of rigging equipment for hoisting operations.
   b. The rigger is responsible for knowing and identifying the weight of items to be hoisted, and for requiring that the rigging used is of sufficient capacity.
   c. If defects/damages are observed in any of the rigging equipment used, the rigger is responsible for removing this equipment from service.
   d. The rigger is responsible for immediately halting the hoisting operation if any condition or circumstance presents itself that may jeopardize the safety of personnel or property, or the integrity of the crane or hoisting equipment.
8. Signal-Person (Tag-Person) Responsibilities
   a. The signal-person is responsible for requiring that the hoist path remains free and clear of obstructions and that no personnel are allowed to walk or work under a hoisted load.
   b. The signal person is responsible for requiring that the signaling method used between him/herself and the operator is appropriate and agreed upon, and for maintaining constant communication with the operator.
   c. The signal-person is responsible for immediately halting the hoisting operation if any condition or circumstance presents itself that may jeopardize the safety of personnel or property, or the integrity of the crane or hoisting equipment.

D. Elevators and Personnel Hoists

1. At a minimum, the use, inspection, set-up, and maintenance of personnel hoists shall comply with 29CFR Part 1926.552, WAC 296-155 Part L, ANSI A10.4-196, and the manufacturer's recommendations and requirements.
2. Prior to installation of a personnel hoist, a review shall be conducted by a Registered Professional Engineer. The review shall specifically include the foundation requirements and structural connection details. The Engineer's report shall be submitted to **STP, the Subcontractor**, hoist erector, and project structural engineer for review.
3. An erection, dismantling, and inspection plan shall be submitted to **STP** prior to commencement of these activities. The plan shall include, at a minimum, the procedures required to erect/dismantle/inspect the hoist, a list of the qualified individuals who will perform the work, a hoisting plan, and fall protection procedures to be employed.
4. Riding on top of the car is not permitted except during the erection, dismantling, and inspection operations. During these periods, the car may only be operated by the person(s) on the top of the car. Operation of the car from inside the cab is not allowed.
5. The designated operator(s) shall be trained in the use, daily inspection and maintenance, and emergency procedures associated with the operation of the personnel hoist. This training shall be conducted by the manufacturer or his designee, documented, and a copy shall be provided to the **STP** upon completion. Untrained operators shall not operate the hoist.
6. For permanent elevator construction, the false car or temporary platform will be enclosed on all sides by guardrails and toeboards, in compliance with 29CFR Part 1926.502. A removable front rail shall be provided on the car to provide access onto and off of the car.

7. For permanent elevator construction, any side or sides of the false car/temporary platform where potential pinch points or struck by hazards, including counterweight rails and car rails (at rollers) shall be enclosed and protected. Where these protective devices must be removed to perform work, the car shall be locked and tagged out prior to removal, in accordance with Section 6 – Control of Hazardous Energy.
8. For permanent elevator construction, a falling object protection system, consisting of a minimum of ¾" plywood and 2" framing, shall be installed above the car, and shall extend at least to the perimeter of the car floor.
9. Following erection or installation, the hoist or elevator shall be inspected by the manufacturer or his designee, and shall be documented. This inspection report shall be submitted to **STP** upon completion.

E. Hand and Power Tools

1. At a minimum, the use, inspection, set-up, and maintenance of hand and power tools shall comply with 29CFR Part 1926.300 through 1926.307 (or other applicable standard), and the manufacturer's recommendations and requirements.
2. The hazards and hazard controls associated with the use of hand and power tools, specific to the operation at hand, shall be documented as part of the PTP, and shall be reviewed with the workforce prior to commencement of activities.
3. Operators of tools and equipment must be thoroughly knowledgeable and fully understand the proper use, inspection, maintenance requirements, and hazards associated with that tool/piece of equipment. It is the responsibility of the **Foreman** and supervisor to require that the operator is competent prior to use. Where the operator does not demonstrate a thorough knowledge and understanding of the tool/equipment, a formal training session shall be conducted by the employer. This training shall be documented.
4. At a minimum, all tools and equipment shall be inspected prior to use by the operator. Any tool or piece of equipment found to be defective or damaged shall be removed from service.
5. All tools and equipment that use a toggle switch to power on and off shall be equipped with an emergency shut-off switch (push-stop or equivalent), whether standard or manufacturer-approved retro-fit. This includes, but is not limited to table saws, masonry saws, and portable cement mixers.

F. Heavy Equipment

1. At a minimum, the operation, inspection, set-up, and maintenance of heavy equipment shall comply with 29CFR Part 1926.600 through 1926.606, WAC 155-600, 605, 610, 615, 620 and the manufacturer's recommendations and requirements.
2. Operators of heavy equipment shall possess an Appropriate State License, for the type of equipment that he/she operates. Operators of equipment to which these licensing requirements do not apply, including motorized buggies, aerial lifts, etc., shall be trained in accordance with the manufacturer's requirements. This training shall be documented and produced upon request.
3. The hazards and hazard controls associated with the use of heavy equipment, specific to the operation at hand, shall be documented as part of the PTP, and shall be reviewed with the workforce prior to commencement of activities.
4. Any person observed utilizing a piece of equipment in an unsafe manner shall be cause for the **Foreman** or supervisor to immediately halt the operation of the equipment, and conduct re-training, at a minimum. Training or re-training is the responsibility of the employer (STP or Subcontractor).
5. Operators are required to wear seat belts at all times on equipment provided with such.
6. The operator is responsible for proper equipment mobilization, set-up, inspection, and use.
7. The operator must not engage in any activity that may divert his/her attention from the operation of the equipment (e.g. talking on a cellular phone, etc.).
8. The operator is responsible for immediately halting the operation of the equipment if any condition or circumstance presents itself that may jeopardize the safety of personnel or property, or the integrity of the equipment.

9. Ground personnel working around heavy equipment shall wear a high-visibility, reflective vest at all times.
10. Where heavy equipment moves forward and backward frequently, or where equipment enters and exits an area frequently, a designated walkway or path around this area shall be provided for site personnel not directly involved with the operation. Where this is not feasible, a spotter shall be used to direct the equipment and personnel.
11. Passengers or riders are not allowed on heavy equipment, unless specifically designed to do so.
12. Back up alarms must be functioning at all times. In case of failure of an alarm, a spotter must be present during equipment operation to warn the operator and any passing personnel.

G. Ladder Safety

1. At a minimum, the use, inspection, and set-up of ladders shall comply with 29CFR Part 1926.1053, and the manufacturer's recommendations and requirements.
2. This Project will develop a ladder safety program, specific to the project, which meets or exceeds the guidelines listed in this Manual.
3. The **Competent Person** shall require that all **Employees** potentially exposed to hazards associated with ladders possess the knowledge and skill required to perform the duties for which they are assigned. In addition, a **PTP** shall be completed prior to any operation, any ladder-use hazards shall be clearly identified, and hazard controls defined. The **PTP** shall be reviewed with the work crews daily prior to the start of work, and where conditions change.
4. Portable ladders shall be Type IA (300 pound), minimum. Job-made ladders shall be constructed in accordance with ANSI A14.4-1979. Aluminum or metal ladders are not allowed on construction sites, except where the ladder is a fixed ladder, or part of a scaffold system.
5. Ladders shall be inspected daily prior to use by the employee using the ladder. Ladders used by the general workforce (i.e. access ladders and job-made ladders) shall be inspected by the **STP competent person** or owner of the ladder. Ladders shall be inspected for damage, defects, wear, and cracks. Damaged or defective ladders shall be tagged or marked as such, and shall be removed from service by the inspector.
6. Work Practices (NOTE: Work practices and ladder use/set-up shall also comply with Sections 13.K and 13.L of this Manual):
    a. When ascending or descending, the employee shall face the ladder, and shall maintain three points of contact. Where tools or materials must be carried, they shall be carried in a tool belt/pouch, or shall be hoisted using a rope or handline.
    b. Employees must always work facing the ladders, and shall not straddle the ladder.
    c. Employees working from ladders must maintain their center of gravity (mid-section) between the vertical rails of the ladder. Where this is not feasible, the requirements of Section 13.K shall apply.
    d. Stepladders shall be used in the fully open position, and placed on a firm, stable level.
    e. Stepladders shall not be used to access higher or lower levels, whether the ladder is fully open or not. Job-made, fixed, or straight/extension ladders shall be used to access higher or lower levels. NOTE: See Section 13.L for ladder opening requirements.
    f. Straight/Extension and job-made ladders shall be secured at top and base when used to access higher or lower levels. Where employees work from a straight/extension or job-made ladder, the base of the ladder shall be secured, or another employee shall steady the ladder at the base.
    g. Straight/Extension ladders shall be set at an angle of approximately seventy-five (75) degrees off horizontal when in use.
    h. Extension ladders sections shall not be separated and used independently.
    i. Ladders shall not be placed in front of doors or gates unless the door/gate is blocked open, locked (with signs placed), or guarded. Means of egress and travel ways shall not be blocked without the consent and coordination of the **STP Supervisor**.

H. Motor Vehicles and Jobsite Transportation Rules

1. At a minimum, the use, inspection, and operation of all motor vehicles shall comply with 29CFR Part 1926.601(b), WAC 296-155-610 and the manufacturer's recommendations and requirements.
2. Operators of motor vehicles must possess a valid driver's license, and obey both project and public rules regarding the safe operation of vehicles.
3. Each vehicle that will be used on a project for either transportation or for material handling/ moving must possess a valid vehicle inspection sticker issued by vehicle's state of registration.
4. The operator must not engage in any activity that may divert his/her attention from the operation of the vehicle (e.g. talking on a cellular phone, etc.).
5. All operators and passengers of motor vehicles are required to wear seat belts at all times while the vehicle is being operated.
6. Transportation of persons in the back of pick-up trucks is prohibited.
7. Motor vehicles shall not be used to transport compressed gas bottles on the project site, unless the bottles can be positively secured in the upright position.
8. Motor vehicles shall not be used to pull or tow unless the vehicle and attachments are specifically designed to do so.

I. Powder-Actuated Tools

1. At a minimum, the use, inspection, and operation of powder-actuated tools shall comply with 29CFR Part 1926.302(e), WAC 296-155-36313, 36319, 36321, ANSI A10.3-1970, and the manufacturer's recommendations and requirements.
2. The hazards and hazard controls associated with the use of powder-actuated tools, specific to the operation at hand, shall be documented as part of the PTP, and shall be reviewed with the workforce prior to commencement of activities.
3. The substrate (e.g. concrete slab, steel, etc.) where powder-actuated fasteners are to be set shall be assessed against the type of fastener and the rating of the charge so that it is appropriate for the application. This is the responsibility of the employer's **Competent Person**. Documentation of this assessment shall be produced upon request.
4. Operators of powder-actuated tools shall be trained in accordance with the manufacturer's requirements, and shall possess a valid training card for the particular make/model being used. Documentation of training shall be carried by the operator, and shall be produced upon request.
5. The tool and all associated safety devices shall be inspected tested each day prior to loading in accordance with the manufacturer's equipment inspection and testing guidelines.
6. Operators of powder-actuated tools shall don, at a minimum, safety glasses and a faceshield or tight-fitting protective goggles, in addition to other project-required protective equipment.
7. The operator of the tool shall see that no other unprotected **Employees** are present in the immediate vicinity prior to firing.
8. Immediately prior to firing the tool, the operator shall, in a loud voice, say 'FIRE' or 'FIRING'. This will be repeated prior to each time the tool is fired.
9. Where a powder-actuated tool misfires, the operator shall not attempt to reuse the same firing shot or cap. The shot/cap shall be replaced, or the strip shall be forwarded.
10. Spent or misfired shots/caps shall be placed into a container of water as they are generated, and disposed of properly at the end of the shift. Spent or misfired shots/caps shall not be thrown or placed on the floor.

J. Rigging Equipment

1. At a minimum, the use and inspection of rigging equipment shall comply with 29CFR Part 1926.251, WAC 296-155-330, 570 and the manufacturer's recommendations and requirements.
2. The hazards and hazard controls associated with the use of rigging equipment, specific to the operation at hand, shall be documented as part of the PTP, and shall be reviewed with the workforce prior to commencement of activities.
3. All rigging equipment shall be visually inspected prior to its use by a **Competent Person** designated by the employer. Defective and/or worn equipment shall be removed from service.
4. A formal, documented rigging inspection and inventory shall be conducted at least weekly by the **Competent Person**. This documentation shall be retained on the project by the Responsible **Contractor**, and shall be produced upon request.
5. Custom-designed or shop-fabricated lifting devices or rigging equipment, including scale pans and hoisting buckets, shall be proof-tested to 125 percent of its rated capacity. The proof test shall be documented, including the test date, the name of the person overseeing the test, the configuration of the rigging during the test, a description of the load lifted and its weight, and the amount of time the device/equipment was subjected to the test weight. The proof test shall have been conducted within the previous 12 months.
6. The rated capacity shall be permanently affixed to the custom-designed or shop-fabricated lifting devices or rigging equipment.
7. Where lifting eyes or loops are provided on the equipment or material to be hoisted, slings shall not be choked directly to the lifting eye or loop. Shackles or hooks shall be used.
8. All hooks shall have a self-closing safety latch which prevents attached slings from becoming inadvertently freed.

K. Rotating and Non-Rotating Laser Use

1. At a minimum, the use and inspection of lasers, both rotating and stationary, shall comply with 29CFR Part 1926.54, WAC 296-155-155 ANSI Z136.1-2007, and the manufacturer's recommendations and requirements.
2. The owner's manual shall be kept with the equipment at all times, and shall be produced upon request.
3. Laser users shall be trained and certified for the class of laser he or she is using. Proof of qualification shall be maintained on the user, and shall be produced upon request.
4. Where Class II or more powerful lasers are used, appropriate laser warning placards shall be conspicuously posted on the equipment, and laser warning signs shall be posted in the area where the beam reaches/affects.
5. Where a certain model or class laser requires the use of a specific eye protection for protection against direct or reflected laser light, this operation shall be conducted only in an area where access is restricted to only the user(s), or shall be done off-hours.

6.

Section 12 – Excavation and Trenching

A. Definitions

1. Excavation. Any operation involving digging, blasting, auguring, boring, drilling, pile driving, grading, plowing in, hammering, jacking, trenching, tunneling, demolition, or any other activity involving breaking or displacement of earth below grade.
2. Trench. A narrow excavation (in relation to its length) made below the surface of the ground. In general the depth is greater than the width, but the width of a trench (measured at the bottom) is not greater than 15 ft. If forms or other structures are installed or constructed in an excavation so as to reduce the dimension measured from the forms or structure to the side of the excavation to 15 ft. or less (measured at the bottom of the excavation), the excavation is also considered to be a trench.

B. General Requirements

1. All excavation and trenching work and practices shall, at a minimum, comply with OSHA29CFR Part 1926.650 through 1926.652, including all appendices, and WAC 296-155 Part N.
2. STP will Issue an Excavation Permit for all excavations on this project.
3. **STP** and each **Subcontractor** requiring employees to work in or around excavations is required to have an excavation and trenching safety program (**DUSA** requires a **SHEMP**), specific to that **Contractor's** operations, which meets or exceeds the guidelines listed in this Manual. This program shall be part of the **Contractor's** HASP.
4. The Competent **Person** shall require that all **Employees** potentially exposed to excavation or trenching hazards possess the knowledge and skill required to perform the duties for which they are assigned. In addition, a PTP shall be completed prior to any operation, hazards shall be clearly identified, and hazard controls defined. The PTP shall be reviewed with the work crews daily prior to the start of work, and where conditions change.

C. Pre-Excavation Requirements

1. The appropriate locating agency shall be contacted prior to excavation, at any depth or by any means, at the appropriate time interval prior to the anticipated commencement of excavation activities.
2. Prior to excavation, the excavation **Contractor** shall obtain an excavation permit from city or town, in accordance with any local requirements.
3. Utility markings set by the utility owner or company shall be maintained through the completion of excavation activities. Where utility markings will be disturbed or removed as part of the excavation or other construction activities, the excavation **Contractor** shall establish off-set marks to maintain the exact location of the utility.
4. The location of underground structures and utilities, including the location(s) of shut-off valves/switches/devices shall be shown on a set of as-built drawings. The as-built drawing shall remain in the possession of the **Competent Person** during all excavation activities, and shall be immediately produced upon request or during an emergency.

D. Excavation Requirements

1. The **Competent Person** shall be present during all excavation activities. The **Competent Person** is responsible for the following:
    a. Soil classification using at least one manual and one visual test, as prescribed in WAC 155-6641 Appendix A – Soil Classification. NOTE: Classification of soils is not required if the excavation activities assume the presence of Type C soils.
    b. Pre-excavation determination of the protective systems to be employed during all phases of excavation including sloping/benching, shielding, and/or shoring.
    c. Conducting a formal, documented inspection of the excavation as it progresses, at least once per shift for previously-opened excavations, after each rain or severe weather event, and when existing conditions around the excavation change.
    d. Assessment of potential atmospheric hazards prior to **Employee** entry. Where the potential of atmospheric hazards exist, the excavation shall be treated as a permit required confined space, in accordance with Section 5 of this Manual.
2. The owner's manual and owner's tabulated data for all shoring and shielding equipment being used shall be kept on the project, and shall be produced upon request.
3. Excavations six (6) feet or greater in depth require fall protection, in the form of guardrails, around all openings. Guardrails shall be installed as the excavation progresses. Where **Employees** must enter the area between the guardrails and the edge of the excavation, they shall be protected by a personal fall arrest system. This requirement will not apply to excavations that are sloped 1 ½: 1 (H: V).
4. The excavation **Contractor** shall place detectable warning tape (i.e. metallic) above any newly installed underground installation or utility. The tape shall warn future excavators of the presence of the utility or installation, and shall be specific to the type of utility. The warning tape shall be buried above the utility, no closer than twenty-four (24) inches above the top of the ductbank. If the top of the ductbank is less than two feet below grade, a fixed warning system shall be placed at grade. NOTE: Contractual requirements may differ. Where conflicts exist between contract documents and this requirement, the more stringent shall apply.
5. Where existing underground utilities or installations are exposed or uncovered, the excavation **Contractor** shall, prior to backfill, replace and/or repair the existing utility warning system (i.e. tape, ductbank markers, etc.) back to its original condition. Where no warning system is encountered during the excavation, the requirements of D.4 above shall apply.
6. A STP Excavation Permit is required for all excavations on the project, regardless of depth. The **Project Safety Manager** will issue to the **competent person**. This permit is to remain in the possession of the **competent person** throughout the excavation process.

Section 13 – Fall Prevention and Protection

A. Definitions

1. Controlled Access Zone (CAZ). An area in which fall hazards are present, where access to the area is limited to only those personnel required to perform the task at hand, and where personal fall arrest systems or personal fall prevention systems are used in place of guardrails or covers.
2. Cover. A protective device positively secured over a hole or opening on a horizontal surface, which once installed, prevents employees from falling through the hole or opening to a lower level, or prevents materials from being dropped through the hole or opening to a lower level.
3. Feasible. As it applies to fall prevention and protection, feasible shall mean possible.
4. Floor Opening (Hole). Any gap, void, or opening in a floor, roof, or other horizontal surface equal to or greater than two (2) inches in its least dimension.
5. Guardrail. A barrier erected in front of unprotected edges or around openings that prevents employees from falling to lower levels. The term 'guardrail' includes top and mid-rails.
6. Horizontal Lifeline. A lifeline designed and installed in a horizontal manner, used as the connection point for a personal fall arrest system.
7. Leading Edge. The edge of a floor, roof, or formwork for a floor or other walking/working surface which changes location as additional floor/roof/decking/formwork is placed or constructed.
8. Personal Fall Arrest System (PFAS). A system used to arrest an employee in a fall from a working level.
9. Personal Fall Prevention System (PFPS). A system, used by an individual inside a controlled access zone that does not allow the user to reach the unprotected edge. These are restraint devices where the user is positively tethered to an anchorage point.
10. Safety Monitoring System. A system in which a **Competent Person** is responsible for recognizing and warning employee of fall hazards.
11. Toeboard. A low protective barrier that will prevent the fall of materials and equipment to lower levels and provide protection from falls for personnel.
12. Vertical Lifeline. A lifeline designed and installed in a vertical manner, used as the connection point for a personal fall arrest system.
13. Wall Opening. Any gap or void **twenty-two (22)** inches or more high and **twelve (12)** inches or more wide, in a wall or partition, through which employees can fall to a lower level. NOTE: These numbers are more stringent than WAC 296-155-500.
14. Warning Line. A barrier erected on a roof to warn employees that they are approaching an unprotected side or edge, and which designates an area in which roofing work may take place without the use of typical fall protection systems.

B. General Requirements

1. All work and practices shall comply with WAC-296-155 Part C-1, and the manufacturer's requirements and recommendations for any equipment and tools used.
2. **STP** will develop a **SHEMP** and each **Subcontractor requiring** employees to work in areas where fall and falling object hazards are present, are required to develop a fall prevention and protection program, specific to that **Contractor's** operations, which meets or exceeds the guidelines listed in this Manual.
3. It is presumed that all project **Employees** will be potentially exposed to fall or falling object hazards at some point during their service at the SR99 project. Therefore, formal training shall be provided by the employer (or his designee) to all employees working on the project. Training and certification of training shall be in accordance with WAC 296-155-24505 and the requirements listed in this Section.
4. Any person observed utilizing fall protection in an unsafe manner shall be cause for the **Foreman** or supervisor to immediately halt the operation, and conduct re-training, at a minimum. Training or re-training is the responsibility of the employer of that employee.
5. The employer's **Competent Person** shall require that all **Employees** potentially exposed to fall or falling object hazards possess the knowledge and skill required to perform the duties for which they are assigned. In addition, a PTP shall be completed prior to any operation, any

fall or falling object hazards shall be clearly identified, and hazard controls defined. The PTP shall be reviewed with the work crews daily prior to the start of work, and where conditions change. Where a PFAS is used by employees, the **Competent Person** shall calculate the total fall distance so that employee will not contact levels or objects below the elevated surface.

6. Fall prevention or protection systems are required for all project **Employees** and trades that are potentially exposed to falls equal to or greater than six (6) feet. Such systems must be safely implemented, installed, and used with proper planning and training.
7. Controlled access zones shall be separated from general work areas by means of guardrails constructed in compliance with Section 13.F. STP does not recognize or allow the use of rope/flagging/chain/etc. as a means for identifying controlled access zones. Danger signs informing project personnel of the fall hazard and the requirement for PFAS use shall be posted at the area perimeter.
8. Where a ladder or stairs are the only means for access into a controlled access zone (e.g. steel erection decking area), danger signs informing project personnel of the fall hazard and the requirement for PFAS use shall be posted at the ladder/stair access point.
9. The use of warning lines is not allowed for fall protection purposes on roofs or in any other location.
10. The use of safety monitoring systems is not allowed for fall protection purposes on roofs or in any other location.

C. Hoistways

1. Riding on top of the elevator or personnel hoist car is not permitted except during the erection, dismantling, and inspection operations. The employee(s) on the top of the cab shall be protected from falling by means of a guardrail. The employee on the top of the cab may utilize a PFAS provided that the anchor point meets the requirements of WAC 296-155-24510 (1)(b)(vi).
2. Prior to commencement of hoistway construction, shaft openings and entryways shall be fully protected and enclosed from the floor to the top of the opening/entryway using fire-retardant plywood doors and framing, or a combination of removable guardrails and fire-retardant safety netting (full height). This protection shall be installed after consultation with the contracted hoist constructor. All access doors and gates into shafts shall swing open away from the shaft, and shall be operable from both the inside and the outside of the shaft.

D. Excavations

1. Excavations six (6) feet or greater in depth require fall protection, in the form of guardrails, around all openings. Guardrails shall be installed as the excavation progresses. Where **Employees** must enter the area between the guardrails and the edge of the excavation, they shall be protected by a personal fall arrest or prevention system and anchor point. This requirement will not apply to excavations that are sloped at least 1 ½: 1 (H: V).

E. Falling Object Protection

1. All personnel working or walking on construction sites or designated construction areas are required to wear hard hats compliant with ANSI Z89.1-1981. The brim of the hard had shall face forward when in use. Where other protective equipment is worn on the head, face, neck, eyes, or ears, it shall not interfere with the fit or use of the hard hat. NOTE: General construction support areas (e.g. construction trailers, break rooms, etc.) do not require the use of hard hats, so long as overhead protection is provided, there are no falling object hazards present, and the area has been designated by **STP** as a support area.
2. Where materials, debris tools, and/or equipment are stored or piled higher than the height of the top edge of the toeboard, paneling or screening shall be installed from the top edge of the toeboard to the top edge of the guardrail system. No material storage is allowed above the height of the top rail of the guardrail system. NOTE: Equipment including scaffolding, aerial

lifts, material hoists, etc. must be designed or engineered to accept the weight and wind loads associated with screening or paneling. This is the responsibility of each **Contractor**.

3. Where work is taking place in areas where no falling object protection is provided (e.g. steel erection, bolting up, scaffold erection, guardrail installation, active shafts, etc.), or where work is taking place at or over the edge of the elevated work area, the area(s) below the work operation shall be cordoned off with DANGER tape. Danger signs informing project personnel of the overhead hazard shall be posted at the area perimeter. No personnel are allowed within the cordoned off area(s). NOTE: The area to be cordoned off shall extend at least fifteen (15) feet from the vertical plane of the elevated work area. The size of the cordoned off area must be assessed by STP, the **subcontractor**, the subcontractor **Safety Representative**, and the **Project Safety Manager** so that it adequately protects all personnel and property below.
4. Where work must be performed above building entrances and exits, whether on the construction site or part of a public area, canopies shall be installed and enclosed so as to fully protect pedestrians from falling objects. This shall be done in conjunction with item G.2 above (screening/paneling). These canopies shall be capable of withstanding the maximum forces that could be applied from potential falling objects, considering the maximum fall distance from the elevated work area to the canopy.
5. In areas adjacent to public walkways or travel ways, canopies shall be installed and enclosed so as to fully protect pedestrians and vehicles from falling objects. This shall be done in conjunction with item G.2 above (screening/paneling). These canopies shall be capable of withstanding the maximum forces that could be applied from potential falling objects, considering the maximum fall distance from the elevated work area to the canopy.

F. Guardrail Construction

1. Guardrail construction shall comply with the requirements listed in WAC 296 115-500, at a minimum.
2. Guardrails shall be installed immediately following (or prior to, if possible) construction of the walking or working surface. No trades or **Employees**, other than those directly involved in the construction of the walking or working surface shall be allowed to access the walking/working surface until the guardrail systems have been installed.
3. Where guardrails are installed at an elevation lower than the future finished floor elevation (i.e. prior to placement of concrete slab over metal decking), the guardrail (top and mid-rail) height shall be set so as to accommodate the finished floor elevation, so long as the top-rail height will be maintained between thirty-nine (39) and forty-five (45) inches at both the unfinished and finished floor elevations. Where this is not feasible, a second set of guardrails, set at a height between 39 and 45 inches above the finished floor elevation, shall be installed prior to placement of the finished floor system. The original set of guardrails shall not be removed until after the finished floor system has been placed.
4. Where wire rope and steel stanchions are used for guardrail construction, the wire rope shall be at least one-half (1/2) inch in diameter. Turnbuckles shall be installed at all turns in the direction of the guardrail. At least three (3) forged steel wire rope clips shall be installed on all eyelets. The use of lap joints is prohibited.
5. Employees shall not be allowed to use guardrails as an anchor point for personal fall arrest or prevention systems, unless the guardrail system has been designed and engineered in accordance with Section 13.M of this Manual.

G. Guardrail Removal Requirements

1. **STP**, as part of this HASP, will develop and implement a Guardrail Removal Program.
2. The Guardrail Removal Program shall include permit system where removal of guardrails is controlled and overseen by the **STP Superintendent**. The **Project Safety Manager** must be included as part of permit authorization process.
3. The Guardrail Removal Permit must address and identify the following:
    a. The purpose for the guardrail removal, including duration;
    b. The **Contractor** responsible for establishing a CAZ prior to guardrail removal;
    c. The name of the **Competent Person** responsible for oversight of the operation;
    d. The location of the guardrails to be removed;
    e. A description of the fall prevention or protection systems to be utilized by the employees working inside the CAZ, including anchorage points.
    f. Permit approval (signature) block, including the **Competent Person**, and the **Superintendent** (general or area) and **Project Safety Manager**.
    g. Permit closeout, including inspection of the re-installed guardrail system and sign-off by the **Competent Person**.

H. Hoist Areas

1. Areas where equipment and materials hoisting or loaded onto an elevated level from another level, including below-grade hoisting operations, shall be designated as such by **STP**. These hoist area requirements also apply to debris chutes.
2. Removable guardrails or lockable gates/doors shall be installed at each loading area. These guardrails or gates/doors shall remain in place and secured when the loading area is not in use. Where chains are used as guardrails, they shall be installed so as to meet the criteria listed in Sub-Section E above.
3. A CAZ, compliant with Sub-Section B.7 of this Section, shall be established far enough from the loading area (i.e. edge of building) so that all materials/equipment hoisted in can be temporarily stored within the CAZ, until such time as the guardrail or gate/door is re-secured at the loading area.
4. Employees inside the CAZ shall be protected from falling by personal fall arrest or prevention systems at all times when the guardrail or gate/door is removed.
5. The area(s) below the hoisting area shall be protected from falling object hazards in accordance with Sub-Section E above.

I. Horizontal Openings (Holes)

1. Employees shall be protected from falling, tripping, and stepping into holes by means of guardrails or covers.
2. Where guardrails or covers must be removed a CAZ, compliant with Sub-Section B.6 of this Section, shall be established around the hole prior removing the guardrail or cover.
3. Employees inside the CAZ shall be protected from falling by personal fall arrest or prevention systems at all times when the guardrail or gate/door is removed.
4. The area(s) below the hole shall be protected from falling object hazards in accordance with Sub-Section E above.
5. Covers shall be capable of supporting, without failure, at least twice the weight of employees, equipment, and materials that may be imposed on the cover at any one time. No materials or equipment shall be stored or placed on any cover or hole.
6. Covers shall be positively secured to prevent accidental displacement by wind, equipment, or employees. Cleats secured to the cover do not constitute ‘positively secured’.
7. Covers shall be marked with the word ‘HOLE’ or ‘COVER’, and shall be re-marked as necessary so that the markings are clear and understood.
8. Where depressions or vertical projections in the walking/working surface exist, and cause an elevation change greater than one-half (1/4) inch, these areas shall be covered to produce the same elevation as the surrounding areas, or shall be ramped or beveled at a pitch that does not interfere with pedestrian or equipment travel. Where these depressions or vertical projections

can not be covered/ramped/beveled, they shall be barricaded to prevent employees from walking onto the fall hazard.

J. Incidents Involving Falls

1. In the event that an employee falls, from any elevated height or at the same level, whether or not the fall is arrested by a PFAS, a Post Incident Review Meeting, as outlined in Section 17.E, shall be held by **STP** and the **Subcontractor** involved .
2. Following any incident involving a fall, whether or not injury or property damage is involved, the **STP Executive Vice President** shall be notified.

K. Ladder Use

1. Employees will be permitted to perform work from portable ladders without the use of fall protection when all of the following criteria are met:
    a. The working height of the employee (the step or rung height on which the employee is standing) is less than ten (10) feet;
    b. The work can be performed without the employee having to reach (i.e. the **Employee**'s hips remain within the plane of the vertical side rails);
    c. The ladder is properly tied off or in the case of a stepladder, the spreaders are fully extended and locked;
    d. The ladder is erected no closer than fifteen (15) feet from an open edge, window, or hole, or shaft, regardless of the presence or non-presence of guardrails, and;
    e. The **Employee** can safely maintain three (3) points of contact continuously while ascending or descending the ladder.

L. Ladder Openings

1. Guardrail openings at points of ladder access must be equipped with a gate or an offset opening so that employees can not walk directly into the openings.
2. All ladder openings shall be equipped with a rope, secured at the top of the ladder or ladder opening, to be used to manually hoist tools and materials up the ladder. The rope shall be capable of supporting at least twice that maximum anticipated load that could be hoisted.
3. Ladders constructed and placed for use by more than one contactor (i.e. general-use access ladders) shall be the type that allows the user to walk-through the rails at the top of the ladder.

M. Lifeline Use

1. All lifeline training, installation, and use shall be in strict compliance with the manufacturer's recommendations and requirements. The owner's manual shall be kept on site at any time the equipment is being used, and shall be produced upon request.
2. Vertical lifelines shall be connected to their anchor points with a locking, self-closing snap hook, as defined in 29CFR Part 1926.500. Knots shall not be used to secure lifelines to anchor points.
3. Horizontal Lifelines shall be either part of a manufactured system, used in the manner for which it was designed, or shall be designed by a qualified person (e. g. Professional Engineer registered in the appropriate state). Documentation of this design shall be kept on site at any time the equipment is being used, and shall be produced upon request.
4. All horizontal lifelines are to be installed and used under the supervision of a qualified person. This person must be identified in the appropriate PTP.

N. Rescue Provisions and Plan

1. The **STP Safety Manager** shall contact the local Fire/Rescue Department to establish the guidelines and limitations of rescue services. Contact shall be made prior to the commencement of above or below-grade construction, and shall be updated at intervals of no less than once every six months (or more frequently for high-hazard operations).
2. During the meeting, the project scope and phasing, the planned activities and circumstances where rescue may be needed, the maximum response time of the fire department, and the limitations of the fire department's equipment and personnel (i.e. max height of ladder truck) shall be reviewed and discussed. This meeting shall be documented and kept in the project files.
3. Each operation that involves the use of personal fall arrest systems shall be assessed for rescue needs, should the user of the PFAS fall. Rescue provisions shall be documented on the PTP, and shall be reviewed with the entire crew as part of the daily PTP meeting.
4. Where self-rescue is utilized as an option, a secondary rescue plan shall be provided, in the event that the **Employee** is unable to self-rescue (i.e. unconscious or incapacitated).

O. Roofing Activities

1. Where work is performed on or from a roof, roof area, terrace, or similar with unprotected sides and edges six (6) feet or more above lower levels, employees shall be protected by a guardrail system or personal fall arrest or prevention system.
2. Where roofing activities are conducted on roofs without parapets, or where work is conducted within six (6) of a roof edge, the area(s) below the roof shall be protected in accordance with Sub-Section E of this Section.

P. Scaffolding

1. Fall protection requirements for scaffolds shall comply with the requirements outlined in 29CFR Part 1926.450 through 1926.452, and the manufacturer's recommendations and requirements, except as noted below.
2. Where work is performed on or from any type of temporary elevated platform, supported or suspended, including its supporting structure with unprotected side and edges six (6) feet or more above lower levels, employees shall be protected by a guardrail system or personal fall arrest or prevention system. This requirement also pertains to scaffold erection and dismantling.
3. Cross braces on scaffolds shall not be considered a top or mid-rail, regardless of the intersection height.
4. The **Competent Person** shall clearly identify acceptable anchor points and train employees required to don personal fall arrest or prevention systems on a scaffold.
5. No employees shall be permitted to enter the area at the base of the scaffold, or beneath any other overhead operation on scaffolding, particularly where outriggers are used. The area beneath the scaffold shall be protected in accordance with Sub-Section E of this Section.
6. Ladders or stairs shall be provided to access all levels of scaffolds where the change in elevation is equal to or greater than nineteen (19) inches.

Section 13 – Fall Prevention and Protection

Q. Stairways

1. Stairway construction and use shall comply with the requirements outlined in 29CFR Part 1926.1050 through 1926.1052 and WAC 296-155-477.
2. Stairways under construction shall not be used, except by those employees directly engaged in the construction of the stairway. Employees engaged in stairway construction shall be protected from falling by a personal fall arrest system.
3. Stairways used during construction shall be kept free and clear of materials, equipment, and debris.

R. Steel Erection and Precast Concrete Erection

1. Fall protection practices related to steel and precast concrete erection operations shall comply with the requirements listed in Section 13 of this Manual.
2. Employees engaged in all activities related to steel and precast concrete erection, including rigging, connecting, decking, bolting-up, welding, etc. who are exposed to falls equal to or greater than six (6) feet shall be protected from falling by guardrails, safety nets, or personal fall arrest or prevention systems.
3. Where a PFAS or PFPS is used during welding and cutting operations, the operator shall use fall protection equipment that is fire-resistant.
4. Controlled Decking Zones, as defined in 29CFR Part 1926.760(c) shall not be allowed. The requirements outlined in Section 13 of this Manual regarding controlled access zones shall apply.
5. All tools and equipment used during steel erection shall be secured against accidental displacement or falling. Canvas bolt bags shall be used for storing and carrying bolts, drift pins, etc. The handles of canvas bolt bags shall be reinforced with nine wire.
6. Falling object protection, as outlined in Sub-Section E of this Section, is required during steel and precast erection operations.
7. Custody of Fall Protection.
    a. **STP** shall declare, at the time of Contract buy out, the entity that will be responsible for the installation of guardrails during steel and precast erection operations.
    b. Prior to allowing any trades or **Employees** onto a working floor or an area of a working floor, all guardrails and floor covers must be installed. The **Superintendent** and **Project Safety Manager** must inspect the floor or area prior to turnover, and formally accept the conditions from the erector or other person responsible for installation of guardrails and covers. NOTE: Tradesmen or **Employees**, other than the erector, may be allowed onto a working floor prior to its official turnover, so long as the work required is directly related to the erection process (e.g. temporary lighting installation, inspection by **STP**, etc.) and the **Employees** on the floor are appropriately protected from falls and falling object hazards.

S. Wall Openings

1. Employees exposed to falls equal to or greater than six (6) feet through wall openings, as defined in Sub-Section A of this Section, shall be protected by guardrails or personal fall arrest or prevention systems.

Section 14 – Fire Prevention and Protection

A. Definitions

1. Heating Device. Any device, whether electric, fuel, or gas-fired used to provide heat to an area within the construction project.
2. Hot Work. Any activity that produces a spark, flame, or significant heat. Hot work includes, but is not limited to: torch cutting, welding, burning, spark-producing grinding, brazing, soldering, temporary heating, hawk heating, and cadmium welding operations.
3. Temporary Enclosure. An enclosure used for construction purposes that will not become a part of the permanent condition. Temporary enclosures include, but are not limited to: office trailers, shanties, shacks, tarpaulin enclosures, poly-sheeting enclosures, break areas, etc.

B. General Requirements

1. Work and practices on projects shall comply with the applicable parts of OSHA29CFR Part 1926, WAC 296.155- 250, 265, 270, NFPA 241, – Safeguarding Construction, Alteration, and Demolition Operations, NFPA 502, the requirements outlined in this Manual, and the manufacturer's requirements and recommendations for any equipment and tools used. Where conflicts exist between standards, the more stringent shall apply.
2. Prior to the commencement of construction activities, **STP** will develop and implement a fire prevention and protection program, specific to that project's operations, which meets or exceeds the guidelines listed in this Manual. This program shall be updated and re-issued as conditions (e.g. location of fire fighting equipment) change. At a minimum, this program must address/list/identify the following:
    a. Responsibilities relating to fire prevention and protection for **Contractors**;
    b. Coordination requirements with local Fire Department, including permit requirements for construction projects;
    c. Fire protection requirements for the construction and use of temporary offices, trailers, shanties, storage, and break areas;
    d. Temporary fire detection and suppression equipment to be installed and utilized during construction;
    e. Description of Project requirements regarding the storage and accumulation of combustible materials, debris, and trash;
    f. Plans showing the proposed and/or actual locations of fire fighting equipment including standpipes, fire hydrants, fire extinguishers, etc.;
    g. Identification of designated storage areas for flammable/combustible liquids and gasses;
    h. Procedures for use and storage of flammable and combustible liquids and gasses;
    i. Fire alarm system impairment procedures and permits;
    j. The location and contents of the project Knox Box (if required)
    k. Training requirements for STP and **Subcontractors** of all tiers;
    l. Temporary heating requirements and restrictions;
    m. Procedures for hot work operations and project-specific permits, and;
    n. Refueling operations.
3. The **Safety Representative (s)** shall require that all **Employees** potentially exposed to hazards associated with fire prevention and protection, hot work operations, and handling of flammable or combustible liquids or gasses shall possess the knowledge and skill required to perform the duties for which they are assigned. In addition, a PTP shall be completed prior to any operation, any fire prevention/protection hazards shall be clearly identified, and hazard controls defined. The PTP shall be reviewed with the work crews daily prior to the start of work, and where conditions change.
4. Smoking is prohibited on this project. **STP** Will designate a smoking area, where smoking is allowed. Ashtrays and/or cigarette butt containers shall be provided and the accumulation of trash or debris shall not be allowed in designated smoking areas.
5. Vehicles shall not be allowed to park within twenty (20) feet of structures under construction. Where vehicles must enter a building or structure for material handling or off-loading, the vehicle shall be turned off when not traveling. Running vehicles shall not be left unattended.

6. Above ground refueling of motorized vehicles and heavy equipment shall not take place within twenty (20) feet of a structure. Refueling of other equipment (e.g. portable generators, pumps, etc.) shall be done only when the equipment is off and allowed to cool down. A twenty (20) pound ABC dry chemical fire extinguisher shall be present at all refueling operations.
7. Open fires are prohibited.
8. All tarpaulins and poly-sheeting used on construction sites shall meet the requirements of NFPA 701 - Standard Methods of Fire Tests for Flame Propagation of Textiles and Films. All tarpaulins and poly-sheeting shall be stamped and marked as Flame Retardant. No hot work operation, other than temporary heating, shall take place within thirty-five (35) feet of tarpaulins or poly-sheeting, unless protected by fire blankets or other suitable protective devices.
9. The project shall implement project or work area security measures to reduce or eliminate the likelihood of un-authorized persons entering the project or work area. These measures include perimeter fencing, physical isolation of work areas, gate and door locks, and security firms or guards. The level and extent of security measures will be dependant upon the type and location.

C. Accumulation and Disposal of Trash and Debris

10. Combustible debris and general trash shall not be allowed to accumulate on the project. It is the responsibility of the **STP Superintendent** to enforce this requirement, as well as the requirements outlined in Section 15 – Housekeeping. Debris shall be removed from all areas of the worksite daily, at a minimum.
11. Combustible debris and general trash shall be disposed of in a dumpster or trash cans outside of the structure whenever possible. No dumpster or trash cans shall be placed/or stored within twenty-five (25) feet of the building. Where dumpsters must be placed within twenty-five feet of the structure (i.e. due to site constraints or where chutes are used), the dumpster shall be covered with a flame resistant or fire retardant netting or a solid, non-combustible cover.

D. Compressed Gas Cylinders

12. All cylinders shall be marked with the name and CAS identification number of their contents.
13. Cylinders, when in use, shall be positively secured in the upright position. Where carts are used, the retaining device or chain shall be used. Twenty (20) and thirty (30) pound liquefied petroleum gas (propane) tanks and acetylene 'B' tanks shall be secured in a cart, case, or placed into a milk crate to prevent tipping. Propane tanks larger than thirty (30) pounds shall be secured in a cart or against a solid structure.
14. Cylinder Storage:
    a. Shall consist of manufactured cages (open-ventilation type) with roofs.
    b. Cages shall be stored in the area designated by the **STP Superintendent** for compressed gas storage, and shall be no closer than twenty-five (25) feet from the building. Cylinder storage areas shall be protected against physical damage from vehicles and equipment.
    c. Cylinders shall be separated according to their hazard classes, and signs shall be posted at each storage area, warning employees of the hazards (i.e. no smoking, flammable gas storage, non-flammable gas storage, etc.).
    d. Cylinders shall be stored in the upright position, positively secured, and valve caps shall be on.
    e. All cylinders shall be removed from the work area and returned to the cylinder storage area after each work shift. Under no circumstances shall cylinders be stored in gang boxes, shanties, trailers, etc.
    f. The **Contractor** shall provide a minimum of one twenty (20) pound ABC dry chemical fire extinguisher at each cylinder storage area.
15. Cylinders shall not be hoisted using slings, chains, ropes, or by the valve cap. Use only carts or racks specifically designed for hoisting.

16. The use and storage of liquefied petroleum gas (propane) gas shall comply with the requirements listed in 29CFR Part 1926.153, WAC 296-155-275 as well as SFD fire department regulations.

E. Coordination and Permitting with Local Fire Department

17. Prior to the commencement of construction activities, the **STP Project Manager** shall set-up, coordinate, and chair a meeting with the local Fire Department. This meeting shall be documented, and the meeting minutes shall be retained in the project files. At a minimum, the following items shall be reviewed and addressed during the meeting:
    a. General scope and phasing of the construction project;
    b. Site layout including location of support areas and project access points;
    c. Review of the **STP** Emergency Management Plan;
    d. Review of the **STP** Fire Prevention & Protection Program;
    e. The proposed or actual locations of fire hydrants, standpipes, and fire extinguishers;
    f. Permit requirements for the use and storage of flammable and combustible materials, liquids, and gasses, dumpster placement, hot work operations, demolition, construction, alteration, fire alarm system impairment, temporary heating, etc.;
    g. Fire department requirements for fire alarm system impairment, including the necessity and use of fire department fire watch details;
    h. Any special considerations or requests made by the fire department.
18. The **Project Manager and Safety Manager** shall coordinate meetings and walkthroughs of the project with the fire department at regular intervals throughout the course of construction so that the fire department is aware of phasing, access, fire fighting equipment, and construction hazards that would pose a particular threat to fire-fighting crews (i.e. demolition, deep excavations, etc.).
19. Any visits, walkthroughs, or emergency responses by the fire department shall be documented, and the **Project Manager** shall be informed immediately.

F. Fire Protection Equipment

20. Fire protection equipment use and placement shall comply with 29CFR Part 1926.150, at a minimum.
21. General project fire protection is the responsibility of **STP**. Where **STP** contracts this service to another **Contractor** or entity, **STP** will verify in the field that the requirements of this Section are met.
22. Portable Fire Extinguishers.
    a. In structures and enclosed areas, multi-purpose dry chemical portable fire extinguishers (for general use) shall be provided for each three-thousand (3,000) square feet of working space on the project, both interior and exterior, and configured so that the travel distance from any point in the working area does not exceed one-hundred (100) feet. The minimum size for general use extinguishers is ten (10) pound.
    b. General use fire extinguishers shall be mounted to a stand or permanent building element. The mounting height of the top of the fire extinguisher shall not exceed five (5) feet above the finished floor. Fire extinguisher locations shall be marked with fire extinguisher signs that are visible from the work area.
    c. Multi-purpose dry chemical portable fire extinguishers shall be provided at each compressed gas and flammable/combustible liquid storage area, at each exit from a support office/construction trailer/shanty/shed, at each temporary heating operation, and at each hot work operation. The minimum size for fire extinguishers used in these applications is twenty (20) pound.
    d. **STP** shall require that each shift on the project is staffed with employees trained and knowledgeable in the use of fire extinguishers for the purpose of fighting incipient fires.

23. Temporary (Construction Use) Standpipes.
    a. For above and below grade construction projects, temporary standpipes shall be installed and maintained.
    b. Where charged standpipes are installed for construction purposes, they shall be maintained in the charged condition, and shall be protected against damage and freezing.
    c. Standpipes shall be conspicuously marked with at least a two foot by two foot (2' x 2') sign. The sign shall state 'Fire Department Connection' or 'Fire Department Standpipe'. The lettering shall be red, and the background white.
24. Temporary (Construction Use) Fire Alarm System
    a. Where fire alarm systems (smoke detectors, heat detectors, strobes, horns, etc.) are required by local code, design documents, or for insurance purposes , the system(s) shall be maintained and operational at all times during construction activities.
    b. Temporary fire alarm systems, when required, shall be continuously monitored by an alarm company, or shall be connected to the city fire alarm system.
    c. Where impairment of the temporary fire alarm system is necessary, the requirements outlined in Section 13.F shall apply.

G. Flammable and Combustible Liquids

25. Flammable and combustible liquids use and storage shall comply with 29CFR Part 1926.152, WAC 296-155-270 and the manufacturer's recommendations and requirements, except where noted below. Flammable and combustible liquids include, but are not limited to: gasoline, diesel fuel, kerosene, oil, spray paints, solvents, paint thinners, etc.
26. Flammable and Combustible Liquid Container Storage:
    a. Shall consist of UL-listed metal storage cabinets. No more than sixty (60) gallons of flammable liquid or one-hundred and twenty (120) gallons of combustible liquids shall be stored in any single cabinet.
    b. Cabinets shall be stored in the area designated by the **STP Superintendent**, and shall be no closer than twenty-five (25) feet from the building. Flammable/combustible storage areas shall be protected against physical damage from vehicles and equipment.
    c. Secondary containment in the form of spill control, diking, and drainage control shall be provided at each flammable and combustible liquid storage area. The secondary containment shall be sized so as to container the amount of liquid stored in the storage area. Rain water or snow shall not be allowed to accumulate within the secondary containment. A spill kit shall be provided adjacent to each storage area.
    d. Signs shall be posted at each storage area, warning employees of the hazards (i.e. no smoking, flammable liquid storage, etc.).
    e. Only metal containers (safety can as defined by 29CFR Part 1926.155) shall be used to handle flammable and combustible liquids. The cans shall be color coded (red = gasoline, yellow = diesel fuel, blue = kerosene) according to their product, and shall be labeled with their contents.
    f. Where storage tanks or drums are used for dispensing flammable and combustible liquids, the tank or drum shall be electrically grounded and a bonding wire shall be attached from the tank/drum to the container into which the liquid is being dispensed.
    g. Flammable and combustible liquids shall be removed from the work area and returned to the storage area after each work shift. Under no circumstances shall flammable and combustible liquids be stored in gang boxes, shanties, trailers, etc.
    h. The **Contractor** shall provide a minimum of one twenty (20) pound ABC dry chemical fire extinguisher at each storage area.
    i. Flammable and combustible liquids will not be stored in tunnel locations

H. Hot Work Operations

1. The **STP Safety Manager** shall develop and implement a Hot Work Permit Program, specific to the project. All **Contractors** conducting hot work operations on the project shall first obtain a Hot Work Permit from the **Project Safety Manager** or his designee prior to commencement of hot work activities. Appendix K may be used to satisfy this requirement.
2. The Hot Work Permit shall document that the following conditions have been verified:
    a. The area within thirty-five (35) feet of the hot work operation, and all areas below the hot work operation where sparks and slag may drop have been cleared of all personnel, combustible materials, compressed gasses, and flammable or combustible liquids. Where this is not possible, protection shall be provided for non-essential personnel and combustibles shall be covered with fire blankets;
    b. An individual, trained and knowledgeable in identifying hazards associated with hot work operations and the use of portable fire extinguishers, is designated as the fire watch, and will remain present for the duration of the hot work operation, and one-half hour after the completion of the hot work. NOTE: The fire watch should hold no other duties or responsibilities during his or her service as fire watch. Where sparks and slag can not be contained in the immediate work area (i.e. fall to another level), a fire watch shall be posted at each area;
    c. At least one twenty (20) pound multi-purpose dry chemical fire extinguisher is present with each fire watch.
3. Hot work Permits shall be valid for one shift or one operation only, whichever is shorter.
4. Pressure regulation valves on oxygen/acetylene/propane tanks shall be inspected and tested prior to each use. Defective or damaged equipment shall be immediately removed from service.
5. Oxygen and acetylene tanks shall have flashback arresters installed on both the torch and regulator ends.
6. Hoses and leads shall not be routed through doorways unless the door is blocked open and the hoses are protected from damage.
7. Welding screens shall be provided, placed, and moved as necessary by the **Contractor** to prevent radiation injury and arc flash to project **Employees**.
8. Welding lead terminal lugs shall be covered with non-conductive material.
9. Electric welding operations shall be grounded as close to the point of operation as possible.
10. Welding leads shall be inspected prior to use each day. Damaged welding lead insulation shall be repaired or sealed with epoxy or vulcanizing insulation with an insulation value at least equal to that of the conductor. Electrical tape shall not be used to repair lead insulation.
11. Stingers shall not be laid or rested on conductive material.

I. Temporary Heating

1. Temporary heating operations shall comply with the appropriate State – Board of Fire Prevention Regulations – Use and Maintenance or Temporary Portable Space heating Devices and Equipment Used in the Construction Industry, and the manufacturer's recommendations and requirements, at a minimum.
2. The Responsible **Contractor** shall obtain a Temporary Heating Permit, as required, from the local Fire Department prior to commencement of temporary heating activities.
3. Temporary heating devices shall comply with Hot Work Permit requirements outlined in Sub-Section I of this Section, and shall be continuously monitored by a fire watch. Continuous monitoring may not be required for natural gas-fired heaters where the flame is fully enclosed, the unit is located outside of the building, and the heated air is discharged through metal ductwork.
4. All temporary heating devices and units shall have a warning label or tag permanently affixed. This tag must describe the firing or start-up procedure, emergency shut-down procedure, and minimum clearance distances from all sides of the unit or device.
5. Fuel or gas-fired temporary heating devices shall have safety devices that eliminate the flow of gas/fuel upon extinguishment of the flame. These safety devices shall be tested prior to

each use. Devices or equipment found to be defective or damaged shall be immediately removed from service by the person inspecting the unit.

6. Where natural gas-fired heaters are used, the supply piping shall be welded or threaded steel piping, and shall be designed, installed, and tested in accordance with permanent installation building code requirements. Natural gas piping shall be painted yellow, conspicuously labeled as natural gas at least every twenty (20) feet, and protected from damage by vehicles, equipment, and construction activities.
7. Air monitoring for oxygen, lower-explosive limit, and carbon monoxide shall be conducted in all spaces heated by fuel or gas-fired heaters at least once per hour. A log shall be maintained in each space that denotes the date, time, monitor name, and monitoring results of each round. The following are considered action levels:
    a. Oxygen (O_2): Below 20.5%
    b. Lower Explosive Limit (LEL): Equal to or Greater than 2%
    c. Carbon Monoxide (CO): Equal to or Greater than 17 ppm (½ the OSHA PEL)
8. Where these action levels are exceeded, the area shall be evacuated, and ventilation, either natural or forced, shall be introduced. No personnel are allowed back into the area until safe levels have been reached. Ventilation shall be maintained so that levels remain below the prescribed action levels.
9. Where temporary heating enclosures are constructed of tarpaulins or poly-sheeting, the materials used shall be flame retardant, and shall meet the requirements of NFPA 701 - Standard Methods of Fire Tests for Flame Propagation of Textiles and Films. All tarpaulins and poly-sheeting shall be stamped and marked as Flame Retardant.
10. Temporary heating enclosures shall be fastened securely or guarded by construction so it cannot be blown by the wind against heaters or other sources of ignition.

J. Temporary Enclosures

1. Temporary offices, other than mobile office trailers, including general break areas, shall be constructed of materials having a minimum of one-hour fire resistant rating (i.e. fire-treated lumber and paneling, drywall, etc.).
2. Where temporary heating enclosures or isolation barriers are constructed, they shall be constructed of the materials list in Sub-Section J.1 or I.9 of this Section.
3. Exit doors or flaps shall be placed at all temporary enclosures constructed of tarpaulins or poly-sheeting. Doors or flaps shall be spaced so that no employee must travel greater than fifty (50) feet to reach the exit. For large spaces, the exit doors or flaps shall be placed every fifty (50) feet along the enclosure. Exit signs shall be placed at each door or flap, or the word 'EXIT' shall be spray painted above the door or flap.
4. Directional arrows leading to the exit door or flap shall be spray-painted, using high visibility paint, every ten (10) feet of each wall of a temporary enclosure constructed of tarpaulins or poly-sheeting. The height of the arrows shall be no greater than two (2) feet above the finished floor.
5. Portable heating devices used in temporary enclosures shall not be left unattended. Heating of temporary enclosures shall comply with the requirements outlined in Sub-Section I of this Section.
6. Temporary enclosures shall be equipped with a minimum of one (1) multi-purpose dry chemical fire extinguisher at each exit door, at a minimum.
7. Receptacles for trash and debris shall be provided at each temporary enclosure. Trash and debris shall be removed from the temporary enclosure at least daily, and disposed.

Section 15 – Hazard Communication

A. General Requirements

1. Work and practices on projects shall comply with the applicable parts of OSHA29CFR Part 1910.1200, WAC 296-800-170 this Section, and the manufacturer's requirements and recommendations for any chemicals used. Where conflicts exist between standards, the more stringent shall apply.
2. Prior to the commencement of construction activities, **STP** will develop and implement a hazard communication program, specific operations, which meets or exceeds the guidelines listed in this Manual.
3. The **Competent Person** shall require that all **Employees** potentially exposed to hazards associated with hazardous material handling/use possess the knowledge and skill required to perform the duties for which they are assigned. In addition, a PTP shall be completed prior to any operation, any hazardous materials hazards shall be clearly identified, and hazard controls defined. The PTP shall be reviewed with the work crews daily prior to the start of work, and where conditions change. Include the MSDS in the PTP.
4. Except for the substances listed below, this Hazard Communication Program covers all hazardous chemicals and chemical products that are used by the **STP** and all **Subcontractors**: Hazardous wastes; Tobacco or tobacco products; Wood or wood products (Note: Wood products which have been treated with a hazardous chemical and wood which may be subsequently sawed or cut, generating dust, are not exempt.); Food or cosmetics intended for personal consumption by any person while in the workplace or located in a retail establishment, which are packaged for sale by consumers; Drugs regulated by the U.S. Food and Drug Administration in the non-manufacturing sector; and any other substance to the extent it is used for personal, family or household purposes, or is present in the same form and concentration as a product packaged for distribution and use by the general public.

B. Chemical Use Authorization

1. **STP and Subcontractors** who use, handle or store hazardous substances at this jobsite must see that hazard information is made available to all affected groups concerning materials acquired and brought on-site. The following actions are necessary to fulfill this requirement:
    a. Developing and implementing his or her own Hazard Communication Program.
    b. Requiring that MSDSs (as hardcopies or electronic files) are available for all hazardous chemicals in the work area, stored or in use, during all shifts. Ensuring that work site chemical inventories are maintained and continually updated to include any new chemicals brought on-site.
    c. Requiring that hazardous chemical containers are properly labeled.
    d. STP and any **Subcontractor** using a hazardous substance shall complete the Chemical Use Authorization Form, and shall include the MSDS and the form in the PTP. The hazards associated with the substance shall be reviewed as part of the PTP meeting with the employees who will use/handle the substance.
    e. Where the hazardous substance has any property that is listed as a '3' or a '4' in the NFPA hazard diamond flammability, health, instability, or health section, the **user** shall submit the Chemical Use Authorization Form to the **Project Safety Manager** prior to its use or storage on the project. The **Project Safety Manager** shall determine if the substance is necessary for use on the project, or if special precautions are required during use and handling. The information obtained by the **Project Safety Manager** shall be conveyed to the **Contractor** for the purposes of planning and use.
    f. Requiring that employees receive timely and appropriate Hazard Communication Training and additional training when a new chemical is introduced into the workplace or when there is substantial change in chemical usage or work practices.
    g. In the event of an incident involving exposure to or release of a hazardous substance, cooperate with emergency response personnel by providing a copy of the MSDS and other relevant information.

h. Requiring proper use and storage of hazardous substances per regulations and **WSDOT** requirements.
i. Requiring proper storage and disposal of hazardous waste per regulations and **WSDOT** requirements.
j. Having knowledge of spill reporting thresholds and internal/external communication requirements.
k. Minimizing storage volume of hazardous substances and excess product, unless explicitly approved by **STP Project Management**.
l. WSDOT may need to be copied on all Chemical Use Authorization Forms where the hazardous substance has any property that is listed as a '3' or a '4' in the NFPA hazard diamond flammability, health, instability, or health section, following review by the **Project Safety Manager.**

2. Each workplace container of hazardous substance shall be labeled, tagged, or marked to identify the material and to provide appropriate warnings. Alternative methods such as signs, placards, process sheets, and operating procedures are acceptable for individual stationary process containers, as long as the information is conveyed to all affected persons.
3. A label identifying the contents and providing a hazard warning will be affixed to all containers of hazardous chemicals which could pose a physical or health hazard to exposed employees in the workplace. Appropriate labels are typically affixed by the chemical manufacturer or distributor. The following rules and guidelines apply to all chemical containers:
    a. Hazardous substances regulated by OSHA substance-specific health standards in 29CFR Part 1910 shall bear labels in accordance with the applicable standard.
    b. At a minimum, the label must identify the chemical, and contain hazard warnings (including target organ effects). The chemical identity provided on the label must be the same as or cross-referenced to the same identifier on the MSDS and inventory. The user shall label all containers to which chemicals may be transferred from the primary container, prior to transfer.
    c. Containers that are or become hazardous waste shall also bear Hazardous Waste labels in accordance with the STP Hazardous Waste Program. Hazardous Waste labels must include the proper chemical name (e.g. Waste Lubricating Oil), the hazard type (e.g. toxic, corrosive, etc.) and the date on which the container was filled.
    d. Incoming containers received with defaced or missing labels should be rejected unless the contents are definitely known, and the container is immediately labeled with the appropriate information.
    e. Labels shall not be removed or defaced, and must remain intact during use.
    f. Labels must be legible, in English (another language may be used in addition to English when appropriate), and prominently displayed on the exterior of the container.
    g. Preprinted and manufacturers' labels must be revised within three months of receipt of significant new information, and before the material is reintroduced into the worksite.

Section 15 – Hazard Communication

C. Training

1. **STP** and **Subcontractors** who use or are potentially exposed to hazardous substances on a routine basis or in a foreseeable emergency are required to attend general Hazard Communication Training, provided by the **Contractor**. Personnel who handle hazardous substances shall also receive task-specific training as determined necessary.
2. All personnel who handle, store, use or ship hazardous substances will be trained under the following conditions:
    a. When first hired;
    b. When transferred to a different job;
    c. When the chemical hazards in a work area change;
    d. When a new hazard is introduced;
    e. During normal work hours and at no expense to the employee; and
    f. Attendance is mandatory for all potentially exposed employees (Annual refresher training is recommended).
3. Elements of the annual Hazard Communication Training curriculum shall include:
    a. Scope and Purpose of the Hazard Communication Standard ("Employee Right-to-Know" law)
    b. Requirements of the Hazard Communication Standard
    c. Hazard recognition and nature of hazards
    d. Chemicals in the workplace (by chemical group or specific)
    e. Hazard control measures (engineering controls, work practices, and personal protective equipment)
    f. Emergency Procedures
    g. Understanding the MSDS
    h. Labeling System
4. Task-specific Hazard Communication training shall be incorporated into the written operating procedures for routine and non-routine tasks (PTP).
5. **STP and Subcontractors** shall also comply with the training requirements under the STP Hazardous Waste Program.

Section 16 – Housekeeping

A. Definitions

1. Cord. Any power cord or pneumatic/hydraulic/water/process line or hose.
2. Housekeeping. The practice of organizing materials, tools, and equipment, including the frequent removal and disposal of all types of debris, waste, and trash.
3. Regular Intervals. For the purposes of housekeeping, 'regular intervals' shall mean no less than once daily, or more frequently if material and debris accumulation poses a hazard to employees and property.

B. General Requirements

1. Housekeeping practices shall comply with 29CFR Part 1926.25, WAC 296-155-020 and this Manual, at a minimum.
2. All working and walking surfaces on the project shall be kept free of debris/waste/trash, and other tripping or fire hazards. The project shall be logistically coordinated by **STP** so that materials are organized and stored properly, so as not to pose a hazard to project **Employees**.
3. The **Site Safety Manager** shall require, by daily inspections and walkthroughs of the project, that housekeeping is maintained so as not to pose a hazard to project **Employees**. Specifically, the **Superintendent** in charge of each activity/subcontractor is ultimately responsible for the housekeeping efforts of his/her areas of responsibility.
4. Where a request is made by **WSDOT** to perform housekeeping on the project, either in general or at a specific area, **STP Management** shall honor the request.
5. Housekeeping costs shall be included as part of the bid from the **Subcontractor** and all lower-tier **Contractors**.
6. Where housekeeping issues arise that are not related to the project, **STP** shall notify **WSDOT** of the issue. **WSDOT** should address the issue with the appropriate party.
7. Under no circumstances shall trash and debris be stored within the tunnel structure. The storage area for trash and debris may be allowed, given that all of the following conditions are met:
    a. WSDOT and the local Fire Department, where applicable, must expressly consent to the proposed storage area and methods (i.e. dumpster, barrels, etc.);
    b. Restrictions related to the use and storage in the area must be conspicuously posted by the **STP**, and must be relayed to each **Subcontractor** working on the project; and,
    c. The trash/debris must be removed as frequently as prescribed by the local fire department.
8. Where ice and/or snow have accumulated on walking/working surfaces, they shall be promptly cleared. Sand shall be placed on the surface to prevent slip hazards.

C. Area Management

1. Debris and trash shall be maintained as it is generated. Maintenance includes deposit directly into a receptacle or can, piling material in an area so as not to pose a slip/trip hazard to project **Employees**, or deposit directly into a dumpster.
2. The **STP Superintendent** shall coordinate efforts among the trades and unions so as to have an amicable understanding between all parties involved. This coordination shall take place prior to commencement of major construction activities involving trades other than laborers. Where union agreements disallow removal of trash/debris by trades other than laborers, each **Contractor** will be advised, at bid time, of this requirement. Each **Contractor** must see that appropriate workforces are dedicated to housekeeping.
3. All cords must be maintained so as not to pose a slip or trip hazard to project employees. Specifically, cords shall not be run or laid across driveways, walkways, stairs, or ladder bases.
4. Where hoses and lines must cross walkways, stairs, or ladders, the hose/line shall be covered and ramped so that the tripping hazard is minimized, and the hose/line is protected. The hose/line cover shall be conspicuously painted or marked.
5. Debris that poses a 'rolling' hazard when stepped on, including piping, wires, welding rods, beads or shot, nails, or otherwise, shall be placed directly into a container upon generation.

6. Where materials, debris tools, and/or equipment are stored or piled higher than the height of the top edge of the toeboard, paneling or screening shall be installed from the top edge of the toeboard to the top edge of the guardrail system. No material storage is allowed above the height of the top rail of the guardrail system. NOTE: Equipment including scaffolding, aerial lifts, etc. must be designed or engineered to accept the weight and wind loads associated with screening or paneling.

D. Eating Locations and Food Debris.

1. **STP** will designate locations where employees may consume food and take breaks. These locations shall be chosen and designated based on the availability of hand-washing stations, the proximity to flammable/combustible liquid/gas storage areas, and the potential for rodent or pest intrusion.
2. The designated eating/break locations shall have rodent-proof receptacles for the disposal of food waste and debris. These receptacles shall be emptied daily.
3. Each **Employee** and **Subcontractor** is responsible for maintaining eating/break areas free of trash and debris.

Section 17 – Incident Management and Prevention

A. General Requirements

1. Emergency planning and implementation shall comply with 29CFR Part 1926.35, WAC 296-155-17309 the applicable parts of 29CFR Part 1926.65, and the requirements listed in this Manual, at a minimum.
2. **STP** personnel and all **Subcontractors** on the project shall be made aware of, the requirements listed in this Section, including the requirements developed and stated by **STP** as part of the project's Emergency Management Plan (See Section 17.B below). All **Personnel** are required to abide by the requirements of the project's Plan.
3. Where **STP** will require that first aid/CPR-trained individuals treat or attend to injured persons where they may be exposed to bloodborne pathogens or bodily fluids, the **Contractor**(s) shall comply with 29CFR Part 1910.1030, and **STP** shall develop and implement an Exposure Control Plan. If the project relies on outside services to perform first aid treatment and/or CPR, this shall be expressed to and enforced with the project workforce.
4. **STP** and each **Subcontractor** shall provide and maintain first aid kits at each support trailer, office location, shanty, and gang box. Eye wash facilities shall be maintained at each support trailer and office, and where the Material Safety Data Sheet requires. Only persons trained and certified in first aid and bloodborne pathogens shall administer first aid treatment.
5. During the planning phase of the project, the **Project Manager** and **Project Safety Manager** shall require that all **Employees** potentially exposed to hazards associated with emergency response and emergency management possess the knowledge and skill required to perform the duties for which they are assigned.
6. **STP** and each **Subcontractor** shall, as part of the pre-task planning process, assess the operation to determine the potential emergencies that could arise. Where potential emergencies are identified, the appropriate response(s) shall be listed, and the responsibilities for each response made known. The PTP shall be reviewed with the work crews daily prior to the start of work, and where conditions change.
7. Prior to the commencement of construction activities, the **STP Project Manager** shall coordinate and chair an Emergency Management Meeting. This meeting shall be held in order to review the general scope of work and phasing specific to the project, and the possible emergencies that could arise during the course of construction. This meeting shall be documented by the **Management Team**, and minutes shall be distributed for comment to the attendees. Attendees at this meeting shall include, at a minimum:
    a. WSDOT Project Manager
    b. STP Project Executive
    c. STP **Project Manager**
    d. STP **Project Safety Manager**
    e. STP **Project Superintendents**
    f. WSDOT Environmental, Health, and Safety Representative
    g. Local Fire Department House Captain (This may be a separate meeting)
    h. Local Police Department House Captain (This may be a separate meeting)
    i. Local Ambulance Service (if dedicated to project/area)
    j. WSDOT Police Department (This may be a separate meeting)
    k. WSDOT Mitigation Manager (This may be a separate meeting)
8. The **STP Project Manager** shall coordinate meetings and walkthroughs of the project with the local authorities at regular intervals throughout the course of construction so that the authorities are aware of phasing, access, fire fighting equipment, and construction hazards that would pose a particular threat to emergency response crews (i.e. demolition, deep excavations)
9. For new construction and renovation of unoccupied structures, or where the project if separated from the public by fencing or barricades that surround the site, the **STP Project Management** shall prominently display the physical address number of the project at the project's main and secondary entrances. This display shall be plainly visible from all streets that the fire department may use to access the site.
10. Any visits, walkthroughs, or emergency responses by local authorities shall be documented, and the **WSDOT Representative** shall be informed immediately.

11. Exit signs shall be located at each exit, exit stairway or ladder opening.

B. Emergency Management Plan

1. Following the Emergency Management Meeting(s), the **STP Project Management Team** shall develop a program, specific to that project's operations, which meets or exceeds the guidelines listed in this Manual. This program shall be separate from the HASP, and shall be updated and re-issued as conditions (i.e. location of fire fighting equipment or changes in project personnel) change. At a minimum, this program must address/list/identify the following:
    a. Preparation for emergency response, including orientation and training;
    b. Mock emergency drills, including coordination and frequency (no greater than every six (6) months. NOTE: Where an actual drill cannot be performed due to project location restrictions (i.e. occupied structures), a scenario drill shall be performed at the same frequency, with all parties participating;
    c. Roles and responsibilities for the project action team;
    d. First Aid policy and procedures;
    e. External communication of a emergency;
    f. Internal (project) communication during a emergency;
    g. Contact names and numbers for project personnel and emergency services;
    h. Control of the site during emergency responses, including emergency response access;
    i. First hour response procedures (at least up through turnover to the responding emergency response group and/or Incident Commander);
    j. Location(s) of emergency and spill containment equipment located on the project;
    k. Evacuation procedures, including signaling of evacuation, rally points, and re-entry;
    l. Incident Investigation procedures, reporting, and forms NOTE: Supervisor's Incident/Accident Investigation Form may be used to satisfy this documentation requirement;
    m. External entity involvement (OSHA, Insurance Company).
    n. Project security measures. Project security measures shall comply with contract documents, but at a minimum, reasonable security precautions shall be implemented by the **Project Manager** to prohibit intrusion into project areas.
2. Emergencies and their associated responses must be individually planned for in advance. Each type of possible or anticipated emergency shall include a list of actions, the responsibilities for the actions, and the listed roles of project personnel. At a minimum, the following items must be addressed in the Emergency Management Plan:
    a. Incidents involving injury to personnel, including bodily injury and death;
    b. Incident involving injury to the public;
    c. Incidents involving damage to property, public and project;
    d. Collapse of a structure or portion thereof;
    e. Bomb threats, security risks, or terrorist attacks;
    f. Fire and explosion;
    g. Utility failures and associated events;
    h. Equipment failure such as crane collapse or loss of load;
    i. Workplace violence events;
    j. Natural disasters (hurricane, flood, earthquake) and severe weather events;
    k. Environmental releases;
    l. Events involving media coverage;
3. The Emergency Management Plan shall be submitted to the Emergency Management Plan Meeting attendees upon completion. The plan shall be reviewed for accuracy, and comments made. NOTE: Where confidential information (i.e. home phone numbers) is contained within the body of the Emergency Management Plan, this information may be omitted during the review phase.

C. Emergency Protocol and Notifications

1. As part of the project orientation process, all **Employees** shall be instructed as to the project-specific notification during emergencies. **Employees** shall be issued a sticker, for placement inside of the hard hat, containing the project's location and emergency numbers. **Employees** are encouraged to report life-threatening events to emergency services, with immediate follow-up notification to the **Project Manager** and **Project Safety Manager**.
2. Emergency phone numbers shall be posted at each phone location on the project.
3. The following is the sequence of notifications and actions. NOTE: There are actions that must be taken simultaneously in addition to notifications. It is the responsibility of the project's Emergency Coordinator to effectively manage all of these actions in the order that prevents or minimizes loss of life and damage to property.
4. The **STP** Emergency Coordinator must coordinate the following:
    a. Emergency Services Notification (911), if not already notified;
    b. Emergency Coordinator (**Project Manager** or **Safety Manager**), if not already notified;
    c. Project Action Team (via direction from the Emergency Coordinator);
    d. Dispatch of Emergency Team members to the scene to assess the emergency, reporting back to the Emergency Coordinator;
    e. Dispatch of Emergency Team members to signal and initiate the evacuation (if necessary) of the project;
    f. Dispatch of Emergency Team members to control site access and clear access for emergency response teams/fire trucks/ambulances, etc.;
    g. WSDOT Operations Center Notification;
    h. Police Department Notification;
    i. WSDOT Project Manager Notification;
    j. WSDOT Construction Mitigation Manager] Notification;
    k. Summon secondary support services including structural engineers, insurance company accident re-creation and investigation teams, equipment vendors and suppliers;
5. WSDOT Project Manager should coordinate notification to the following:
    a. Internal Notifications to WSDOT Personnel
    b. Notification to any WSDOT Operations Center, requesting notification to the Local Emergency Management Team or other WSDOT responding agencies/ departments, dependant upon the severity and/or location of the incident.
6. Upon arrival of emergency responders (i.e. fire department), the Emergency Coordinator shall pass any and all information pertaining to the emergency to the Incident Commander. Following the passing of information, the Emergency Coordinator shall then serve as support to the Incident Commander.
7. Following the initial incident response and actions, the Emergency Coordinator, or his designee, shall that the following actions take place:
    a. The accident scene or damaged area(s) is secured and cordoned off;
    b. Documentation of the scene is accumulated;
    c. Contributing factors are identified and recorded;
    d. Reports from outside entities are obtained (i.e. police reports)
    e. Witness are interviewed and statements are obtained in writing;
    f. Photographs of the scene are taken;
    g. Worker's compensation injury reports are completed and filed;
    h. Notifications are made to the State Department of Industrial Accidents and Occupational Safety and Health Administration Area Office, where required;
    i. General liability and property damage reports are completed and filed;
    j. The incident investigation is formally closed out with all parties.

Section 17 – Incident Management and Prevention

A. Maintenance of Project Emergency Contacts

1. The **STP Project Manager** shall provide emergency contact information to the WSDOT Project Manager, Fire Department, Police Department, prior to commencement of construction. The following information shall be provided:
    a. Project Name and Address.
    b. The WSDOT Project Manager's Name.
    c. The Name and Emergency Phone Numbers (either mobile number, home number, or other method of 24-hour emergency contact) for the STP Project Manager, Superintendent(s), and Project Safety Manager.
    d. The Name and Emergency Phone Numbers for any Security Firm overseeing project security.
2. The emergency contact information shall be updated by the **Project Manager** whenever changes are made to project staff or associated phone numbers. Updates shall occur no less frequently than every six (6) months.

B. Post-Incident Review Meeting (Seven Step)

1. Following any incident involving medical attention, public interruption or injury, property damage in excess of one-thousand dollars ($1000), or media event, **STP** shall coordinate and chair a Post-Incident Review Meeting. The **STP Project Manager**, **Superintendent**, **Project Safety Manager**, and responsible **Foremen**, the **lower-tier contractor's principal/executive, project manager/safety manager**/ **Superintendent**, responsible **Foreman**, and the injured party are required to attend. The **EVP** and **CSM** shall be invited to attend.
2. The meeting will review/discuss/address, at a minimum, the following items:
    a. A statement by the **Project Manager** regarding the project's commitment to the reduction and elimination of injuries and incidents;
    b. A statement by the **Project Safety Manager** regarding the purpose of the meeting (identification of casual and contributing factors, prevention of future incidents);
    c. A review of the incident, including the chronology of events, responses, and outcomes;
    d. A participatory review of all of the factors that contributed and/or led up to the incident, and identification of the root cause of the incident (the single failure point, typically involving the absence of policy or procedure, absence of training, mismanagement of activities, etc., which if removed or enhanced would prevent future incidents);
    e. A participatory review of corrective actions, and identification of completion times and responsibilities. All corrective actions must identify the action, the required time for completion, and the person(s) responsible for implementation of the action.
    f. Communication of the incident to the project, either verbal or written, regarding the incident and the corrective actions;
    g. Application of the project's accountability plan.
3. The minutes from the Post Incident Review Meeting shall be distributed to the project team, the Executive Vice President, and to other interested parties (i.e. insurance company, WSDOT).

Section 18 – Inspections, Safety

A. General Requirements

1. It is ultimately the responsibility of the STP **Project Manager**(s), **Project Superintendent**(s), and **Project Safety Manager**(s) to require that safe working conditions and practices are employed at the project. At a minimum, walkthrough-type inspections shall be conducted daily, by the Superintendents and the Safety representatives. These will be documented
2. Formal inspections shall be completed weekly and documented by the inspector with written reports, and photographs. Following each inspection, communications shall be made to the responsible parties/**Subcontractors**, and the documentation shall be forwarded and posted.
3. Where life-threatening conditions or practices are observed, the observer has the obligation to cease the activity or practice until such time as corrective measures are implemented. Where life-threatening conditions or practices are observed, the observer shall contact the **Project Safety Manager** following the observation. Work may not resume until the **Project Manager**, **Project Safety Manager**, subcontractor manager/**Superintendent**/**Foreman**, and responsible person have agreed to and completed the corrective action(s).
4. The project team, including the safety committee, shall conduct regular inspections of the project on a bi-weekly basis. All other requirements regarding observations and corrections shall apply.

B. OSHA Inspections

1. It is the policy of STP to allow OSHA to conduct an inspection of the project. The **Project Superintendent** and **Project Safety Manager** will accompany the OSHA Compliance Officer at all times and make arrangements for the meetings between OSHA, **Subcontractors**, and organized labor representatives. **Subcontractors** will inform the **Project** of the issuance of any OSHA citations and provide a copy when requested. Posting of any citations is the responsibility of each employer
2. The WSDOT should be notified immediately of all OSHA inspections. STP reserves the right to attend any walkthrough or inspection by an OSHA Compliance Officer.

C. WSDOT Inspections

1. WSDOT or WSDOT representatives reserves the right (contract) to conduct inspections of the project. The **STP Project Manager** should be notified of inspections in advance, and shall provide a representative from the staff to accompany the inspection.
2. It is the responsibility of **STP** to correct any unsafe observations, whether an act or condition, in the manner and within the timeframe agreed upon during the inspection. These inspections in no way detract from the overall responsibility to inspect the project, and administer the project safety and health plan.

D. Corrective Action Reports (CAR):

1. All repeat and "Immediately Dangerous to Life or Health" (IDLH) observations shall require a CAR to be written to the DUSA Supervisor or Subcontractor found to be out of conformance.
2. The Following are minimum requirements of the CAR;
   a. The Root Cause is defined;
   b. Immediate actions are defined and implemented;
   c. Interim actions are defined and implemented;
   d. Corrective actions are defined and implemented)
   e. Actions are defined with completion dates;
   f. Training and/or disciplinary action are identified as needed
   g. The CAR is documented and signed by the team implementing the corrective actions;

Section 19 – Personal Protective Equipment

A. General Requirements

1. The hierarchy of controls shall be utilized wherever feasible. Engineering controls shall first be implemented, followed by administrative controls, followed lastly by personal protective equipment.
2. All work involving the use of personal protective equipment shall, at a minimum, comply with OSHA29CFR Part 1926.95 through 1926.134, including all appendices and WAC 296-155 PartC **STP** will develop **PTP'**s for all activities that define required PPE and appropriate PPE use. All employees will be trained and held accountable for proper PPE use and maintenance.
3. Each **Subcontractor** requiring employees to use personal protective equipment is required to have a personal protective equipment safety program, specific to that **subcontractor's** operations, which meets or exceeds the guidelines listed in this Manual. This program shall be part of the **Subcontractor's** HASP.
4. The **Competent Person** shall require that all **Employees** potentially exposed to hazards associated with or mitigated by personal protective equipment possess the knowledge and skill required to perform the duties for which they are assigned. In addition, a **PTP** shall be completed prior to any operation, hazards shall be clearly identified, and hazard controls defined. The **PTP** shall be reviewed with the work crews daily prior to the start of work, and where conditions change.
5. Where construction operations take place in existing facilities or buildings, each employee shall comply with the facility/building WSDOT-specific requirements regarding personal protective equipment, where these requirements are more stringent than those outlined in this Manual.
6. It is the responsibility of **STP** and each **Subcontractor** to supply their employees with required personal protective equipment.

B. Clothing Requirements

1. Appropriate work clothing shall be worn at all times to minimize common exposures including lacerations, abrasions, sun, cold, and contact with contaminants. Each contractor's **Competent Person** or **Safety Representative** shall assess the task at hand and shall determine the appropriate level of protection required. Loose clothing or jewelry that may catch or become entangled is prohibited.
2. Shirts that cover the shoulders and torso, including four (4) inch sleeves are acceptable. Muscle shirts and cut-offs are prohibited. NOTE: Full-arm shirts, coveralls, or jackets may be required for operations where additional exposure is possible.
3. Long work pants are required. Shorts and sweat pants are prohibited.
4. Reflective vests meeting the requirements of ANSI 107-1999, Class II, shall be worn where employees are potentially exposed to heavy equipment or vehicular traffic e. g. utility work, excavation, tunneling, foundations, and structure erection (wood, steel, or concrete).

C. Eye and Face Protection

1. At a minimum, safety glasses meeting the requirements of ANSI Z87.1, including side shields, shall be worn at all times on the construction project. Additional eye and face protection shall be required where flying objects, chemical hazards, or other recognized hazards are present.
2. Each contractor's **Competent Person** or **Safety Representative** shall assess the task at hand and shall determine the appropriate level of protection required and note in **PTP**.
3. The use of chain saws, grinders, demolition saws, etc., requires the use of full face shields in addition to safety glasses.
4. Operations that require the employee to look in an upward direction, including drilling, cutting, etc., require the use of tight-fitting goggles for prevention of falling debris.

D. Foot Protection

1. At a minimum, sturdy, leather work boots shall be worn at all times on the construction project. Boots shall be above the ankle.
2. STP and each subcontractor's **Competent Person** or **Safety Representative** shall assess the task at hand and shall determine the appropriate level of protection required. For certain operations (jack hammering, demolition), safety-toed boots or boots with metatarsal guards may be required.

E. Hand Protection Policy

1. Hand protection shall be worn at all times on the construction project, except where the hands are not used or exposed to hazards (i.e. walking, standing, or writing) e. g. to touch or handle tools, equipment, materials, or debris.
2. Each contractor's **Competent Person** or **Safety Representative** shall assess the task at hand and shall determine the appropriate level of protection required. It is the responsibility of each **Contractor** to determine the appropriate type of hand protection required for each task.
3. Where rotating or reciprocating equipment is used (i.e. hand-held grinders, demolition saws, table saws, drills, cordless screwdrivers, etc.), tight-fitting, solid gloves should be worn. Loose-fitting or knit gloves are prohibited when using rotating or reciprocating tools.
4. Where puncture or contact with sharp objects is possible (i.e. handling metal studs, ductwork, using utility knifes, etc.), employees should don cut-resistant or cut-proof gloves.
5. Where dermal contact with substances known or anticipated to cause adverse reactions with the skin (i.e. concrete work, paints, epoxies, etc.), or where skin absorption of a hazardous material is possible, employees should don chemical-resistant gloves appropriate to the potential exposure.

F. Head Protection

1. At a minimum, non-conductive hard hats meeting the requirements of ANSI Z.89.1 shall be worn at all times on the construction project.
2. The brim of the hard hat shall face forward when in use. Where other protective equipment is worn on the head, face, neck, eyes, or ears, it shall not interfere with the fit or use of the hard hat.
3. Each contractor's **Competent Person** or **Safety Representative** shall assess the task at hand and shall determine the appropriate level of protection required, including electrical work.

G. Hearing Conservation

1. Hearing Conservation shall comply with the requirements of 29CFR Part 1926.52 and WAC 296-817-200.
2. Where hearing protection is worn to minimize noise-induced hearing loss, the noise-reduction rating (NRR) of the hearing protection shall effectively reduce the noise level to below 90 dBA. For construction, noise-reduction ratings shall be considered to be one-half (1/2) of the listed rating. Example: The listed NRR for a particular brand of earplug is 32 dBA. The earplug will be considered to effectively reduce noise by 16 dBA. NOTE: This practice of reducing the NRR by one-half is considered to effectively compensate for field conditions, improper fitting, and changes in noise levels.
3. **STP** will have, on the project, a sound level meter for measuring noise levels. Where assumptions are made by the **STP** or the **Subcontractor** regarding noise levels, the assumptions shall be confirmed with a noise-level meter, set on slow response.
4. As a general rule, any operation that produces noise levels where one must raise one's voice to be heard from a distance of three (3) feet will be considered to be above the permissible exposure level of 90 dBA, and will require the use of engineering controls or hearing protection to effectively reduce noise levels.

H. Respiratory Protection

1. Corporate Respiratory Protection Program: This Document serves as the STP **Corporate Respiratory Protection Program.** STP shall review and evaluate this document on an annual basis, or when changes occur to 29 CFR 1910.134, that prompt revision of this document, or when facility operational changes occur that require a revision of this document. Effective implementation of this program requires support from all levels of management within STP. It is designed to establish clear goals and objectives. Because of the general nature of this document, it is intended to be supplemented at each jobsite by a "Worksite Specific Respiratory Plan". Each **Subcontractor** will be responsible for preparing and implementing a **Respiratory Protection Pr**ogram that complies with this program and defines responsibilities for that contractor.

1.1.1.1 Worksite Specific Respiratory Plan (WSRP) STP's respiratory protection program **Corporate Administrator** (Dragados USA Corporate Safety Manager) will designate a qualified individual at the jobsite to be the site R**espiratory Program Administrator**. This individual will be responsible for:

1.1.1.2 Preparing a WSRP for each substantially unique airborne exposure at the jobsite for any operations that may require the use of respirators (see appendix 1).

a. Submitting the WSRP to the corporate respiratory program administrator for approval before the use of respirators begins, and

b. The successful implementation of the WSRP(s) on his/her jobsite.

2. Employer and Employee Responsibility.

2.1.1. Employer's Responsibility.

2.1.1.1 Respirators, training, and medical evaluations shall be provided by STP at no cost to the employees participating in this program when necessary to protect employee health.

2.1.1.2 The respirator provided shall be suitable for the intended use.

2.1.1.3 STP shall be responsible for establishing and maintaining a respiratory program whenever respirators are used. A program administrator shall be appointed to oversee the program. The **Corporate Program Administrator** for STP is the **Corporate Safety Manager**. The **Corporate Program Administrator** must approve all site specific respiratory programs prior to implementation at the site.

2.1.1.4 The **Site Safety Manager** shall conduct routine evaluations to see that the written program is being followed. STP shall consult with our employees during the evaluations and address any employee concerns that are brought up. Topics to be considered during the evaluation shall consist of: respirator fit, selection, maintenance, interference with job performance, discomfort, if the employee has confidence in respirator effectiveness, etc.

2.1.1.5 The **Site Safety Manager** shall review, on a case by case basis, any request by an employee expressing a desire to wear a respirator during operations that do not require respiratory protection. If the use of respiratory protection in a specific case will not jeopardize the health or safety of the employee, STP will provide the respirator, medical evaluation, and appropriate training for its use.

2.1.2. Employee's Responsibility.

2.1.2.1 The employee shall use the respiratory protection in accordance with instructions and training received or contracted by STP.

2.1.2.2 The employee shall guard against damage to the respirator, and immediately replace suspect respirators.

2.1.2.3 The employee shall report any trouble with or malfunction of the respirator to his/her supervisor.

2.1.2.4 Any employee who voluntarily wears a respirator when a respirator is not required is subject to the medical evaluation, cleaning, maintenance, and storage elements of this program, and must be provided with the appropriate information specified.

2.1.3. STP employees who voluntarily wear filtering facepiece's (dust masks) are not subject to the above provisions of this program.

3. Policy Statement and Respirator Selection

3.1.1. Engineering Controls. To control and/or minimize the threat of occupational diseases caused by breathing air contaminated with harmful dusts, fogs, fumes, mists, gases, smoke, sprays, or vapors, the primary objective of this program shall be to prevent atmospheric contamination. This shall be accomplished as far as feasible by accepted engineering control measures (for example, enclosure or confinement of the operation, general and local ventilation, and substitution of less toxic materials). When effective engineering controls are not feasible, or while they are being instituted, appropriate respirators shall be used.

3.1.2. Respirators - Respirators shall be provided by STP when such equipment is necessary to protect the health of the employee. STP shall:

3.1.2.1 Provide the respirators which are applicable and suitable for the purpose intended.

3.1.2.2 Select respirators from a sufficient number of respirator models and sizes so that the respirator is acceptable to, and correctly fits, the user.

3.1.2.3 Be responsible for the establishment and maintenance of a written respiratory protective program which shall include the requirements outlined in 29 CFR 1910.134.

3.1.3. The employee shall use the provided respiratory protection in accordance with instructions and training received.

3.1.4. Respirators shall be selected on the basis of the hazards to which the worker is exposed.

3.1.5. The user shall be instructed and trained in the proper use of respirators and their limitations.

3.1.6. Respirators shall be regularly cleaned and disinfected. Those used by more than one worker shall be thoroughly cleaned and disinfected after each use.

3.1.7. Respirators shall be stored in a convenient, clean, and sanitary location.

3.1.8. Respirators used routinely shall be inspected during cleaning. Worn or deteriorated parts shall be replaced. Respirators for emergency use such as self-contained devices shall be thoroughly inspected at least once a month and after each use.

3.1.9. Appropriate surveillance of work area conditions and degree of employee exposure or stress shall be maintained.

3.1.10. There shall be regular inspections and evaluations to determine the continued effectiveness of the program.

3.1.11. STP employees shall not be assigned to tasks requiring the use of respirators unless it has been determined that they are physically able to perform the work and use the equipment. A physician shall determine what health and physical conditions are pertinent. The respirator user's medical status shall be reviewed on an annual basis. OSHA says "periodically".

3.1.12. All filter cartridges and canisters shall be labeled with the appropriate NIOSH approval label that has been certified under the NIOSH 42 CFR Part 84. This label is not to be removed, obscured, or defaced while in service. The respirator furnished shall provide adequate respiratory protection against the particular hazard for which it is designed. Only series 100 filters certified under 42 CFR Part 84 shall be used when HEPA filters are called for.

3.1.13. Gas or Vapor Protection – If a respirator with an ESLI (end of service life indicator) is not available, a change-out schedule will be specified on a site-specific basis. Every effort will be made to obtain objective information and data so that the cartridges are changed out prior to end of service life.

4. Respiratory Selection Policy.

Selection of respirators shall be made by the **Site Safety Manager** according to the specific hazard involved (29 CFR 1910.1000) and shall be selected in accordance with the manufacturer's instructions or other related requirements (OSHA, WAC or ANSI standards, NIOSH, etc.).

4.1. The site Safety Manager will make a reasonable estimate of employee exposure by conducting a hazard evaluation for each operation, process, or work area where airborne contaminants may be present in routine operations or during an emergency. This evaluation may include:

4.1.1. Identification and review of a list of hazardous substances used in the work area.

4.1.2. Review of work processes to determine source of potential hazardous substances.

4.1.3. Review process records.

4.1.4. Employee interviews.

4.1.5. Air monitoring (may be mandatory if the contaminant is regulated by a separate OSHA standard e.g. asbestos, lead, silica, methylene chloride, etc.).

4.1.6. Published studies by trade associations, manufacturer, historical data.

4.1.7. Mathematical approaches using physical and chemical properties of the contaminant.

- If a reasonable estimate cannot be obtained, then an IDLH (Immediately Dangerous to Life and Health) atmosphere must be assumed.
- The **Site Safety Manager** will revise and update the hazard assessment as needed. And update the **PTP**

4.2. Air Quality. Compressed air, compressed oxygen, liquid air, and liquid oxygen used for respiration shall be of high purity.

4.2.1. Cylinders of purchased breathing air shall meet at least the requirements of the specification for Type I - Grade D breathing air as described in Compressed Gas Association Commodity Specifications G-7.1-1989.

4.2.2. Cylinders of purchased breathing air should have a certificate of analysis from the supplier that the breathing air meets the requirements of Type I – Grade D air.

4.2.3. Compressed oxygen shall not be used.

4.2.4. Oxygen must never be used with airline respirators. Breathing air may be supplied to respirators from cylinders or air compressors.

4.3. Supplied Air. Compressors purchased by STP for supplying air shall be equipped with the necessary safety and standby devices. A breathing-air type compressor shall be used. The type compressor used shall be constructed and situated so as to avoid entry of contaminated air into the system and suitable in-line air purifying absorbent beds and filters installed. The filter panel must have a tag indicating the last sorbent bed, filter change out and PM work, as well as the signature of the person authorized by STP to perform the change. A receiver of sufficient capacity to enable the respirator wearer to escape from a contaminated atmosphere in the event of compressor failure, and alarms to indicate compressor failure and overheating shall be installed in the system. If an oil-lubricated compressor is used, it shall have a high-temperature or carbon monoxide alarm, or both. If only a high-temperature alarm is installed in the system, the air from the compressor shall be frequently tested for carbon monoxide so that levels are below the exposure limit for carbon monoxide (currently 10 ppm).

4.3.1. Air-line couplings used shall be incompatible with outlets for other gas systems to prevent inadvertent servicing of air-line respirators with non-respirable gases or oxygen.

4.3.2. Compressor shall be set up to minimize moisture content.

4.3.3. Breathing gas containers shall be properly marked and stored in accordance with the NIOSH respirator certification standard, 42 CFR Part 84.

5. Use of Respirators.

Section 19 – Personal Protective Equipment

5.1. This document specifies standard procedures for respirator use. They Include information and guidance necessary for their proper selection, use, and care. Possible emergency and routine uses of respirators shall be where possible anticipated and planned.

5.2. The correct respirator shall be specified for each job. The respirator type shall be specified in the work procedures (**PTP**) by the **Site Safety Manager** or designated individual, who supervises the respiratory protection program. The individual issuing them shall be adequately instructed so that the correct respirator is issued.

5.3. Dangerous Atmospheres. Written procedures and/or checklists for specific routine tasks/jobs shall be prepared covering safe use of respirators in dangerous atmospheres that might be encountered in normal operations or in emergencies. Personnel shall be made familiar with these procedures and the available respirators. Include in the PTP.

5.3.1. In areas where the wearer, with failure of the respirator, could be overcome by a toxic or oxygen-deficient atmosphere, at least one additional person shall be present. The procedures are defined in **Section 6; Confined Space Entry.**

5.3.2. When a self-contained breathing apparatus (SCBA) or hose masks with blowers are used in atmospheres immediately dangerous to life or health (IDLH), standby personnel must be present with suitable rescue equipment (**Section 6; Confined Space Entry**).

5.3.3. STP employees using air-line respirators in atmospheres that are IDLH shall be equipped with safety harnesses and safety lines for lifting or removing persons from hazardous atmospheres or other and equivalent provisions for the rescue of persons from hazardous atmospheres shall be used. Standby personnel with suitable SCBA shall be at the nearest fresh air base for emergency rescue (**Section 6; Confined Space Entry**).

5.3.4. Respirators shall not be removed while inside a work area that requires respiratory protection. Employees shall be permitted to leave the work area to maintain, clean, change filters, replace parts, or to inspect their respirator if it is impeding their ability to work or if the respirator stops functioning as intended. Employees shall notify their immediate supervisor before leaving the work area.

5.3.5. Appropriate surveillance shall be maintained of the work area conditions and the degree of employee exposure or stress. When there is a change that may effect respirator effectiveness, STP shall reevaluate the effectiveness of the respirator.

5.4. Respirator Training. For safe use of any respirator, it is essential that our employees be properly instructed in its selection, use, and maintenance. Both supervisors and workers shall be so instructed by the **Site Safety Manager** or designated individual. Training shall provide our employees the opportunity to handle the respirator, have it fitted properly, test its face-piece seal, wear it in normal air for a long familiarity period, and finally, to wear it in a test atmosphere.

5.5. Fit instructions. Every respirator wearer shall receive fitting instructions including demonstrations and practice in how the respirator should be worn, how to adjust it, and how to determine if it fits properly. Respirators shall not be worn when conditions prevent a good face seal. Such conditions may be a growth of beard, sideburns, or a skullcap that projects under the facepiece or temple pieces on glasses. Also, the absence of one or both dentures can seriously affect the fit of a facepiece.

5.6. Fit Evaluation (Wearer). The wearer shall check the facepiece's fit each time he/she puts on the respirator by conducting a positive/negative pressure seal check as specified in Appendix B-1 of the Respiratory Protection Standard. This shall be done in accordance with the manufacturer's facepiece fitting instructions.

5.7. Fit Evaluation (STP). Periodic checks of our employees wearing respirators shall be accomplished by the site Safety Manager or designated individual. This shall be done in accordance with the manufacturer's facepiece fitting instructions.

5.8. Hair/Apparel. If hair growth or apparel interferes with a satisfactory fit, then they shall be altered or removed so as to eliminate interference and allow a satisfactory fit. If a satisfactory fit is still not attained, the employee must use a positive-pressure respirator such as a powered air-purifying respirator, a supplied air respirator, or a self-contained breathing apparatus.

5.9. Corrective Vision. If an employee wears corrective glasses or goggles or other personal protective equipment, The **Site Safety Manager** shall see that such equipment is worn in a manner that does not interfere with the seal of the facepiece to the face of the user. If the employees wear other safety equipment with their respirators, the employee must pass an appropriate fit test while wearing the equipment to determine of it interferes with the seal.

5.10. Corrective Vision Requirements (Full-Face Respirators). Full-face respirators having provisions for optical inserts shall be reviewed for use by The **Site Safety Manager**. These inserts when used shall be used according to the manufacturer's specification. When employees must wear optical inserts as part of the facepiece, the facepiece and lenses shall be fitted by qualified individuals to provide good vision, comfort, and a gas-tight seal. STP will provide corrective lenses for respirators based on optometry recommendations from an optometrist.

5.10.1. Conventional eye glasses. Conventional eyeglasses shall not be used with full-face respirators. A proper seal cannot be established if the temple bars of eyeglasses extend through the sealing edge of the full facepiece.

5.10.2. Contact lenses. Contact lenses shall not be used with full-face respirators. Wearing of contact lenses in contaminated atmospheres with a respirator shall not be allowed.

5.10.3. Corrective spectacles or goggles. If corrective spectacles or goggles are required, they shall be worn so as not to affect the fit of the facepiece. Proper selection of equipment shall minimize or avoid this problem.

6. Inspection, Maintenance, and Care of Respiratory Equipment.

Equipment shall be properly maintained to retain its original state of effectiveness.

6.1. Maintenance and Care of Respiratory Equipment

6.1.1. Respirators shall be provided in clean, sanitary, and working order.

6.1.2. Respirators shall be cleaned and disinfected using the procedures in Appendix B-1 of the standard or in accordance with the manufacturer's written instructions.

6.1.3. Respirators issued for the exclusive use of an employee shall be cleaned and disinfected as often as necessary.

6.1.4. Respirators issued to more than one employee shall be cleaned and disinfected before being worn by different individuals.

6.1.5. Respirators used in fit testing and training shall be cleaned and disinfected after each use.

6.1.6. STP will provide supplies for our employees to clean their respirators or designate an individual to perform the above duties.

6.1.7. Specific procedures for disassembly, cleaning, and maintenance of respirators used by STP shall be done according the manufacturer's written instructions.

6.2. Routine Inspections. Respirator inspections shall include but is not limited to the following: (Use section 10. Respirator Inspection Record)

6.2.1. A check of the tightness of connections.

6.2.2. Condition of the facepiece, headbands, valves, connecting tube, and canisters.

6.2.3. Inspection of the rubber or elastomeric parts for pliability and signs of deterioration. Stretching and manipulating rubber or elastomeric parts with a massaging action shall keep them pliable and flexible and prevent them from taking a set during storage.

6.3. Random Inspections. Respiratory protection is no better than the respirator in use, even though it may be worn conscientiously. Frequent random inspections shall be conducted to see that respirators are properly selected, used, cleaned, and maintained. The respirator manufacturer's inspection criteria shall be used as the basis for the inspections. The personnel qualified to perform respirator inspections will be identified in the **Site Respiratory Management Program**. Inspection records will be maintained in the field office

6.4. Emergency Escape Respirators. All respirators shall be inspected before and after each use. A respirator that is not routinely used but is kept ready for emergency use shall be inspected after

each use and at least **monthly** to see that it is in satisfactory working condition. Emergency escape only respirators shall also be inspected before being carried into the work area. The respirator manufacturer's inspection criteria shall be used as the basis for the inspections. A record shall be kept of inspection dates and findings for respirators maintained for emergency use. Respirators maintained for emergency use shall be cleaned and disinfected after each use.

6.5. Routine Use Respirators. All routine use respirators shall be inspected before and after each use. The manufacturer's inspection criteria shall be used as the basis for the inspection. Routinely used respirators shall be cleaned, and disinfected as frequently as necessary so that proper protection is provided for the wearer.

6.6. SCBA Inspections. SCBAs shall be inspected **monthly**. Air and oxygen cylinders shall be fully charged according to the manufacturer's instructions. It shall be determined that the regulator and warning devices function properly.

6.7. Replacement or Repair. Only the site Safety Manager or designated individual, with NIOSH approved parts designed for the respirator, shall do replacement or repairs. No attempt shall be made to replace components or to make adjustments or repairs beyond the manufacturer's recommendations. Reducing or admission valves or regulators shall be returned to the manufacturer or to a trained technician for adjustment or repair. Respirators that have failed inspection will be taken out of service.

6.8. Storage Requirements. After inspection, cleaning, and necessary repair, respiratory protection equipment shall be carefully stored to protect against dust, sunlight, heat, extreme cold, excessive moisture, or damaging chemicals. Respirators shall be packed or stored so that the facepiece and exhalation valve shall rest in a normal position and function shall not be impaired by the elastomer setting in an abnormal position.

6.8.1. Emergency Use Respirators. Respirators placed at stations and work areas for emergency use shall be immediately accessible at all times and shall be stored in compartments built for the purpose and in accordance with the manufacturer's recommendations. These compartments shall be clearly marked. Instructions for proper storage of emergency respirators, such as gas masks and SCBA, can be found in "use and care" instructions typically mounted inside the carrying case lid.

6.8.2. Routine Use Respirators. Routinely used respirators, such as dust respirators, may be placed in plastic bags. Respirators having removable cartridges with imbedded compounds that could evaporate into a sealed bag shall be removed so as not to permeate into the rubber parts of the respirator. Respirators shall not be stored in such places as lockers or toolboxes unless they are in carrying cases or cartons.

6.8.3. Identification of Chemical Cartridges. The primary means of identifying a chemical cartridge is by means of its label. The secondary means is by color code. All cartridges purchased or used by STP shall be properly labeled and/or colored coded in accordance with 29 CFR 1910.134 before they are placed into service. The labels and colors shall be properly maintained at all times until disposal. Cartridges having labels and colors not identifiable shall be properly disposed of.

7. Respiratory Protection Training Program.

STP shall develop a standardized training format to meet the requirements for a respiratory protection training program.

7.1. Training shall be provided to each affected employee:

7.1.1. Before the employee is first assigned duties that require respiratory protection and at a minimum, annually thereafter.

7.1.2. Before there is a change in assigned duties.

7.1.3. Whenever there is a change in operations that present a hazard for which an employee has not previously been trained.

7.1.4. Whenever STP has reason to believe that there are deviations from established respiratory procedures required by this instruction or inadequacies in the employee's knowledge or use of these procedures.

7.2. The training shall establish employee proficiency in the duties required by this instruction and shall introduce new or revised procedures, as necessary, for compliance with this instruction or when future revisions occur.

7.3. Training topics shall include, as a minimum:

7.3.1. The STP Respiratory Protection Policy.

7.3.2. The OSHA Respiratory Protection standard.

7.3.3. Respiratory hazards encountered within the scope of work and their health effects.

7.3.4. Need for respiratory protection and the consequences of improper fit, use, or maintenance.

7.3.5. Proper selection and use of respirators.

7.3.6. Inspection and seal checking of respirators.

7.3.7. Limitations and capabilities of respirators.

7.3.8. Respirator donning and user seal (fit) checks.

7.3.9. Fit testing.

7.3.10. Emergency use procedures.

7.3.11. Maintenance and storage procedures.

7.3.12. Medical signs and symptoms limiting the effective use of respirators.

7.4. STP shall document that the training required by this section has been accomplished. The documentation shall contain each employee's name, the signatures or initials of the trainers, and the dates of training. The certification shall be available for inspection by our employees.

8. Respirator Decision Logic.

8.1. Where a Specific OSHA Standard Exits. Each task and/or job having the potential for respiratory hazards shall be evaluated to determine worker protection requirements. The specific OSHA standard shall be consulted to determine delineated respiratory requirements. The standards are listed in the "Z" tables to 29 CFR 1910.1000-1101.

8.2. Where a Specific OSHA Standard Does Not Exist. The NIOSH respirator decision logic table from "NIOSH Guide to Industrial Respiratory Protection", Publication No. 87-116 (or subsequent versions) shall be used. After all criteria have been identified and evaluated, and after the requirements and restrictions of the respiratory protection program have been met, the class of respirators that shall provide adequate respiratory protection shall be determined.

9. Respirator Fit Testing.

. For each employee wearing negative pressure respirators, STP shall perform (or have performed) either quantitative or qualitative face fit tests at the time of initial fitting and at least annually thereafter. The qualitative fit tests may be used only for testing the fit of half mask respirators.

9.1. Half-Mask Respirators. STP shall perform (or have performed) qualitative fit test protocols in accordance with the specific standard listed in the "Z" tables to 29 CFR 1910.1000-1101. Where a specific OSHA standard protocol does not exist, the "NIOSH guide to Industrial Respiratory Protection", Publication No. 87-116 (or subsequent versions) shall be used.

9.2. Minimum Fit Factor. Employees shall not be permitted to wear a half mask or full facepiece mask if a minimum fit factor of 100 or 500, respectively, cannot be obtained.

9.3. Hair. Fit testing shall not be conducted if there is any hair growth between the skin and the facepiece seal surface.

9.4. Respiratory Difficulty during Tests. If an employee exhibits difficulty in breathing during the tests, she or he shall be referred to a physician trained in respiratory diseases or pulmonary medicine to determine whether the test subject can wear a respirator while performing her or his duties.

9.5. Respirator Use Determination. The test subject shall be given the opportunity to wear the assigned respirator for one week. If the respirator does not provide a satisfactory fit during actual use, the test subject may request another fit test, which shall be performed immediately.

9.6. Respirator Fit Factor Card. A respirator fit factor card shall be issued to the test subject for each manufacturer, model number, and approval number for each respirator tested and achieving an acceptable fit factor (Quantitative). The fit factor card will contain the following information, as a minimum:

9.6.1. Name.

9.6.2. Date of fit test.

9.6.3. Protection fit factor obtained.

9.6.4. Name and signature of the person that conducted the test.

9.7. Filter Replacement. Filters used for qualitative or quantitative fit testing shall be replaced weekly, whenever increased breathing resistance is encountered, or when the test agent has altered the integrity of the filter media. Organic vapor cartridges/canisters shall be replaced daily or sooner if there is any indication of breakthrough by the test agent.

9.8. Quantitative Fit Test, Re-Test Requirements. Because the sealing of the respirator may be affected, quantitative fit testing shall be repeated immediately when the test subject has a:

9.8.1. Weight change of 20 pounds or more.

9.8.2. Significant facial scarring in the area of the facepiece seal.

9.8.3. Significant dental changes; i.e., multiple extractions without prosthesis, or acquiring dentures.

9.8.4. Reconstructive or cosmetic surgery.

9.8.5. Any other condition that may interfere with the facepiece seal.

9.9. Fit Test Recordkeeping Requirements. A summary of all test results shall be maintained for 3 years. The summary shall as minimum include:

9.9.1. Name of test subject.

9.9.2. Date of testing.

9.9.3. Name of the test conductor.

9.9.4. Fit factors obtained from every respirator tested (indicate manufacturer, model, size and approval number).

Section 20 – Pest Management

A. General Requirements

1. STP is committed to providing safe, effective pest and rodent control for all of its construction projects. When warranted, the least toxic rodenticides should be used in a manner that minimizes exposure to humans and the environment.
2. The **Employees** should report sightings of pests to their **Supervisors** and the **STP Superintendent**.
3. The following Best Management Practices (BMPs) for pest control should be implemented at all new construction, major renovations, and demolitions that occur.
    a. Each **Contractor** shall keep all food wastes in rodent-proof containers. Rodent proof containers are receptacles with attached lids or covers that prevent rodent intrusion.
    b. If pests become a problem , an outside vendor should be contracted
    c. All pest monitor traps must be labeled with a date and placed in a location on record. The record can be either a map or else documented on a service report form. When traps are no longer effective, they will be replaced as needed.
    d. Insect and rodent survey traps will be placed in potential pest harborage locations and checked at least monthly for the presence of pests. Rodent snap traps or glue boards can be effectively placed inside these stations.
    e. For subsurface construction, special monitoring bait blocks should be placed below the surface level and monitored for rodent activity. In the event of the presence of rodents, increased trapping stations along the perimeter shall be implemented.
    f. Service report forms document the report of a pest problem, actions taken to correct the problem and findings relevant to the source of the infestation. A pest control technician will fill out a Service Report Form on each visit to the facility. STP will keep all service report forms in a logbook at the project.
    g. STP will keep a sign-in/sign-out form in a logbook at the project. The logbook, clearly identified, will be kept in a central location and will be used to document the pest control program.
    h. No pesticides belonging to outside pest control vendors will be stored at the project.
    i. All rodents and insects will be sealed in a closed container and disposed of in an outside enclosed trash container that is emptied on a daily basis

Section 21 – Pre-Qualification Requirements – Contractor/Subcontractor

A. All **Subcontractors**, service **Contractors**, and trade **Contractors** working on the **STP** project are required, as part of the bidding process, to pre-qualify their past safety performance and experience. **Subcontractor's** safety programs will be evaluated and rated according to pre-determined criteria and weighting factors, and placed into categories (above-average, average, and below average). The resulting list of **Subcontractors**, based on the category in which they are placed, shall be available to STP bidding and Purchasing Managers.

B. The intent of the pre-qualification process is to assist the STP Management Team in determining the **Subcontractors** that have performed safely in the past. The published list of **Subcontractors** in no way represents or guarantees future performance or awards of contracts. The pre-qualification program places a strong emphasis on the safety, health, and well-being of the workforce, our community, and the environment, all of which STP holds paramount as a core value. This program will also aid the Project Management Team in developing and fostering a relationship with our **Subcontractor** partners, which will in turn lead to improved performance.

C. **Subcontractors** are required to pre-qualify prior to performing work at **STP**, and shall update the qualification criteria every year thereafter.

D. The pre-qualification process addresses the following items:
   1. Company Information
   2. Insurance/Injury/Illness Experience (previous three years)
   3. OSHA Citation Experience (previous three years)
   4. Safety Management Systems
      a. Goals
      b. Management Involvement
      c. Accountability Program
      d. Emergency Management Program
      e. Incident Investigation and Communication Program
      f. Formal, Documented Training Program
      g. Orientation Program
      h. Performance Evaluation (**Employee**)
      i. Employee Involvement Program (Safety Committee)
      j. Defined Recognition Program
      k. Safety Program Self Evaluation
      l. Safety Meetings
   5. Safety Program Elements

E. No pre-qualification package will be evaluated until all requested information is completed and received.

Section 22 – Project Safety Board

A. The project shall procure, provide, and install a Project Safety Board at the following locations on the project:

1. The main employee entrance to the project;
2. Any general lunch/break/or assembly area;
3. The **STP** office or trailer;

B. The Project Safety Board shall post or contain the following items:

1. Basic project information;
2. OSHA/Washington State 5-in-1 Labor Law Posting;
3. Names and daytime contact numbers for key **STP** and **Subcontractors** personnel;
4. Emergency procedures and contact numbers;
5. A copy of the minutes from the Monthly Management Safety Meeting;
6. Any Safety Bulletins or general communications to the project.
7. The current data reflecting goal achievement

Section 23 – Public Protection

A. General Requirements

1. Protection of the public shall comply with this Section, the Manual on Uniform Traffic Control Devices (MUTCD), and Sections 12.E and 13.B of this Manual, and any **WSDOT** requirements
2. All necessary precautions shall be taken to prevent injury to the general public and damage to property of others. Work shall not be permitted in any area occupied by the general public unless specifically permitted by the contract or in writing by **WSDOT**.

B. Traffic Control Plan

1. Where the public, either vehicular or pedestrian traffic, may be impacted, interrupted, or re-routed, **STP** shall compile and provide a Traffic Control Plan. The Traffic Control Plan shall be submitted to the **WSDOT** and any required public agency for review and comment.
2. The Traffic Control Plan shall include the following:
    a. Project location and Contractor Name;
    b. The purpose for the obstruction;
    c. The duration of the obstruction;
    d. A sketch, either hand or computer drawn, showing the street names, obstruction location, placement and types of signs, and the protective measures (barrels, plates, cones, arrow-boards, etc.) used to protect the **Employees** and the public;
    e. The excavation size, Dig Safe or utility locator number, and associated utility permit numbers (where applicable);
    f. The location of equipment (i.e. crane or concrete pump), including the size, weight, and ground bearing pressures).
3. Where the impact/interruption/traffic re-routing occurs in the city/town, the approved Traffic Control Plan shall be submitted to the appropriate Department of Public Works along with the permit application for the operation. These permits include: Sidewalk Obstruction (No Excavation), Street Excavation, Crane/Boom Truck/Pump Truck Placement, and Temporary Construction Access..
4. NOTE: the Traffic Control Plan shall be submitted to the responsible municipality or department overseeing roadway work.

C. Public Protection Requirements

1. When it is necessary to maintain public use of work areas involving sidewalks, entrances to buildings, lobbies, corridors, aisles, stairways and vehicular roadways, **STP** with the responsible **Subcontractor** shall protect the public with appropriate guardrails, barricades, temporary fences, overhead protection, temporary partitions, shields, mirrors, and adequate visibility.
2. Sidewalks, entrances to buildings, lobbies, corridors, aisles, doors or exits shall be kept clear of obstructions to permit safe entrance and exit of the public at all times.
3. Appropriate warnings and instructional safety signs shall be conspicuously posted where necessary. In addition, a flag person shall control the movement of motorized equipment in areas where the public might be endangered as allowed by local regulations.

4. Where work must be performed above building entrances and exits, whether on the construction site or part of a public area, canopies shall be installed and enclosed so as to fully protect pedestrians from falling objects. This shall be done in conjunction with item G.2 above (screening/paneling). These canopies shall be capable of withstanding the maximum forces that could be applied from potential falling objects, considering the maximum fall distance from the elevated work area to the canopy.
5. In areas adjacent to public walkways or travelways, canopies shall be installed and enclosed so as to fully protect pedestrians and vehicles from falling objects. This shall be done in conjunction with item C.2 above. These canopies shall be capable of withstanding the maximum forces that could be applied from potential falling objects, considering the maximum fall distance from the elevated work area to the canopy. In addition to the site fence required by the contract, drawings, and contract documents, the following shall apply:
    a. A temporary fence shall be provided around the perimeter of above ground operations adjacent to public areas. Perimeter fences shall be at least six (6) feet high. They may be constructed of wood or metal frame and sheathing, wire mesh, or a combination of both. When the fence is adjacent to a sidewalk near a street intersection, at least the upper portion of fence shall be open wire mesh.
    b. Guardrails shall be provided on both sides of vehicular and pedestrian bridges, ramps, runways, and platforms. Pedestrian walkways elevated above adjoining surfaces, or walkways within six (6) feet of the top of excavated slopes or vertical banks shall be protected with guardrails. Guardrails shall be constructed in accordance with Section 13.F of this Manual.
    c. A crosswalk must contain: striping, curb cut for handicap access.
6. Barricades meeting local requirements shall be provided where sidewalk shed or bridges, fences, or guardrails as referenced above are not required between work areas and pedestrian walkways, roadways or occupied buildings. Barricades shall be secured against accidental displacement and shall be maintained in place except where temporary removal is necessary to perform the work. During the period a barricade is temporarily removed for the purpose of work, a watchman shall be placed at all openings.
7. Temporary sidewalks shall be provided, as directed, when a permanent sidewalk is obstructed by the Contractors operation. They shall be installed in accordance with the requirements listed above.
8. Warning lights shall be maintained from dusk to sunrise around excavations, barricades or obstruction in the public areas. Illumination shall be provided from dusk to sunrise for all temporary walkways in both public and construction areas.

Section 24 – Recordkeeping and Reporting

A. General Requirements

1. STP and each **Subcontractor**, of every tier, shall maintain project-specific records in compliance with 29CFR Part 1904, 29CFR Part 1910.1020, and this Section of the Manual.

B. Project Reporting Requirements

1. **STP** will compile and/or prepare all reports associated with incidents or injuries occurring on or related to the project. The preparation of reports may be the responsibility of another employer or **Contractor**, but shall be overseen and distributed by **STP.**
2. Incident/injury reports include the following:
    a. The appropriate State Department of Industrial Accidents –Employer's First Report of Injury;
    b. OCIP, CCIP, (or other insurance company) Claims Reports (Worker's Compensation, General Liability, Auto Liability, Builder's Risk, Property, etc.)
    c. Supervisor's Incident/Accident Investigation Report may be used to satisfy this documentation requirement);
3. All incident/accident/injury reports shall be sent to the required insurance company, per their policy guidelines, with copies of the reports distributed to **WSDOT.**
4. STP will prepare and distribute a Monthly Safety Report, specific to the project. The Monthly Safety Report shall contain the following information:
    a. Summary of accidents/incidents from the previous month;
    b. The number of man-hours worked during the previous month;
    c. Summary of accountability actions (safety violations, dismissals, and fines issued);
    d. A description of upcoming operations and activities.
5. The Monthly Safety Report shall be issued no later than the first (1st) Friday of the month, for the previous month's activities, and shall be distributed to the Executive Vice President (and WSDOT, if required)

C. Project Specific Recordkeeping (By All Contractors). NOTE: Bolded items in this Section apply specifically to STP, but may apply to each individual Contractor as well. Non-bolded items apply to all **Contractors**.

STP and each **Subcontractor** shall establish a filing system meeting these requirements, at a minimum:

1. Accident/Incident Reporting
    a. Worker's Compensation Claims **(For All Project Injuries)**
    b. General Liability Claims **(For All Project Incidents)**
    c. Near Miss/Non-Injury Incident Reports **(For All Project Incidents)**
    d. OSHA 300 Log
    e. First Aid Log **(For All Project Incidents)**
    f. Blank Reporting Forms
2. Written Procedures
    a. Construction Safety, Health, and Environmental Requirements Manual
    b. Project-Specific SHEMP documents
    c. Emergency Action Plan
    d. Operation-Specific Plans and Procedures **(demolition, fall protection, traffic control, SWPPP, critical lift, site specific respiratory plan, PTP, etc.)**
    e. Miscellaneous Plans & Procedures
3. Hazard Communication Program
    a. Chemical Inventory **(For Entire Project)**
    b. Chemical Use Authorization Forms (Completed) **(For Entire Project)**
    c. Material Safety Data Sheets – Alphabetical **(For Entire Project)**
4. Meeting Minutes
    a. High Hazard Activity Planning Meetings

   b. Monthly Management Safety Meeting
   c. Monthly Mass (All Hands) Safety Meeting
   d. Pre-Construction Safety Meeting
   e. WSDOT/Designer/Contractor Meeting
   f. Tool Box Talks **(For Entire Project)**
   g. Miscellaneous Meetings
5. Employee Training & Medical Information
   a. Employee Training File (Alphabetical by Last Name)
   b. Employee Medical Monitoring Program - **PRIVATE**
6. Safety Inspections, General
   a. Audit Reports
   b. STP Inspections and Response
   c. WSDOT Inspections and Response
   d. Insurance Company Inspections and Response
   e. Corrective Action Reports and Implementation
   f. OSHA Inspections and Response
7. Insurance Program
   a. OCIP, CCIP Manual (or other)
   b. Company Insurance Information
   c. Insurance Company Reporting Forms
8. Environmental and Health Information
   a. Regulated Materials Survey Report
   b. Noise Monitoring
   c. Project-Specific Exposure Monitoring (silica, VOCs, asbestos, etc.)
9. Equipment
   a. Manuals
   b. Inventory
   c. Inspections
   d. **Monthly Fire Extinguisher Inspection Log**
   e. **GFCI Inspection Log**
   f. **Staging/Shoring Inspections**
   g. Miscellaneous
10. Permits/Plans/Inspections
   a. **Blasting**
   b. **Confined Space**
   c. **Energized Electrical**
   d. **Excavation**
   e. **Guardrail Removal**
   f. **Hazard Communication**
   g. **Hot Work**
   h. **Shutdown/Disruption**
11. Correspondence (General)
12. **Subcontractor Files**
   a. **Insurance Information**
   b. **Correspondence**
   c. **Inspections Of,**
   d. **Tool Box Talks**
   e. **Pre-Task Plans**
   f. **Miscellaneous**

Section 25 – Safety Management Systems

A. General Requirements

1. STP shall utilize the Safety Management Systems outlined below, at a minimum. This system is intended to provide the **Project Management Team** with the basic guidelines for implementation of a construction-specific Safety Management System including policy, processes, instruction, and documentation. This system focuses heavily on project management at all tiers, employee participation, planning, plan implementation, internal analysis and improvement, and management review. The goal of the Safety Management System is a project where continual improvement, no matter the duration of the construction project, is keyed to the success of the project.
2. If the OHSAS 18001 Occupational Health and Safety Management Systems standard is adopted and implemented this Section of the Manual shall not apply, with the exception of Sub-Section B – Accountability Plan.

B. Accountability Plan

1. **STP** will develop, oversee, and implement an Accountability Plan for the project. The Accountability Plan shall include disciplinary procedures to be utilized where compliance by a **Subcontractor** or **Employee** is not met. The following program elements shall be applied, at a minimum:
2. **Employee** Non-Compliance:
    a. The first offense shall require the **Superintendent** to issue a written warning to the employee, noting the specific **Employee** infraction and retraining.
    b. The second offense shall require the **Superintendent** to either suspend the employee for a period of up to five (5) days, but no shorter than the remainder of the workday on which the infraction was observed, **STP Project manager** and **Safety Manager** shall meet with the **Field** management to review the issue(s) and determine corrective actions. NOTE: All Corrective Actions will be documented. All suspensions shall be without pay.
    c. The third offense shall require the **STP Superintendent** to remove the employee (Subcontractor supervisor for sub employee) from the project permanently, and shall meet with the **Field** management to review the issue(s) and determine corrective actions.
    d. Where disciplinary action is taken against an employee, the employee's **Foreman** or supervisor shall also be held accountable. Where repeat offenses by employees under the supervision of a single **Foreman**/supervisor occur, the discipline for the **Foreman** shall be escalated for each infraction.
3. **Subcontractor** (regardless of tier) Non-Compliance:
    a. The first offense shall require **STP** to issue a written warning to the **Subcontractor**, noting the infraction and recommended corrective actions.
    b. The second offense shall require **STP** to issue a monetary fine to the employer, for a sum of no less than five-thousand dollars ($5,000), and shall meet with the **Contractor's** management to review the issue(s) and determine corrective actions.
    c. The third offense shall require **STP** to withhold payment to the **Contractor** (upper-tier if infraction is with a lower-tier) until such time as appropriate corrective actions are determined and met. **STP Project Management** shall meet with the **Contractor's** management, and a recovery plan shall be compiled and implemented. The third offense may also include dismissal of the **Subcontractor** from the project. All potential dismissals shall be reported to the **STP Executive Vice President.**

4. **STP** reserves the right to hold accountable any **Contractor** for non-compliance with federal, state, and local regulations, and the requirements outlined in this Manual. The following actions may be taken by STP:
    a. Withholding of payment until such time as corrections have been made.
    b. Correction of unsafe conditions by **STP**, with charges for the corrective action levied against the **Contractor**.
    c. Dismissal of the **Contractor** from the project, or dismissal of any **Contractor** staff or tradesman responsible for the infraction or non-performance.
    d. Issuance of a monetary fine to the **Contractor**, for a sum of no less than five-thousand dollars ($5,000).
5. Where **Contractor** management or safety management systems failure is identified as the cause of the infraction, **STP** will call and chair a meeting with the **Contractor** management, executives, principals, and **WSDOT**. The meeting shall focus on the noted failure, disciplinary actions, and a recovery plan for future prevention of failure.

C. Annual Program Evaluation and Improvements Plan

1. The project shall evaluate the state of the safety program at a minimum of once annually. The **Executive Vice President** and **Corporate Safety Manager** shall coordinate and chair a meeting with the **Project** M**anagement Team** to evaluate and review the project's performance from the date of inception. This meeting shall be repeated once per year on or about the date of project inception
2. Each Jobsite, in consultation with the Corporate Safety Department, shall compile the data and documents required to perform the evaluation. The following criteria and performance shall be evaluated:
    a. Comparison of project injury experience to the most current benchmark;
    b. Review of incidents involving lost or restricted time, and public incidents;
    c. Comparison of anticipated loss ratios versus actual loss ratios;
    d. Compliance with the project safety inspection expectations
    e. Review of the project compliance ratings, by category
    f. Effectiveness of the Incident Review process (repeat injuries);
    g. Effectiveness of the project's training and orientation program;
    h. Status and effectiveness of the Employee Participation Program;
    i. Effectiveness of project-wide communications related to safety;
    j. Review of management involvement and effectiveness.
3. The last action of the program evaluation meeting shall be to determine actions for the improvement of the project safety program, where elements of the program are determined to be sub-standard or ineffective. The meeting chair, along with the attendees, shall develop a list of actions, responsibilities, and required implementation times. This list, along with the meeting minutes, shall be published to each meeting attendee. The meeting minutes and action list shall be distributed to each member of the **Project Management Team**.
4. The **EVP and CSM** shall track the progress of the action list until all actions have been completed and effected. Where action item requirements are not met, the **EVP and CSM** shall meet with the **Project Team** to determine the reason for the inaction, and a recovery plan shall be developed by the **Project Team**, in consultation with the **EVP and CSM**.

D. Communication of Safety-Related Items

1. The **Project Safety Manager/Representative** shall be responsible for communication of safety-related items to the entire project, including **WSDOT** and **Contractors** of every tier. Communications shall be made under the following circumstances, at a minimum:
    a. Where an incident occurs on the project, including injury (OSHA recordable or more severe), property damage, or near miss;
    b. Where trends or elevated frequencies in minor injuries are observed or noted (e.g. minor lacerations, foreign objects in the eye, etc.);
    c. Where trends in safety compliance are noted or observed (i.e. via Audit compliance reports or by visual observation);
    d. Where established benchmarks, including incident rates or loss ratios are not met;
    e. Any time a recovery plan for a certain operation is implemented;
    f. Following the annual safety program evaluation and improvements meeting.
2. The communication shall be either delivered verbally to the project during the Monthly Mass Safety Meeting (for minor items) or shall be in writing via a Safety Bulletin issued by the **Project Safety Manager/Representative**. Where issued via Safety Bulletin, it shall be distributed to all project **Personnel** to be used as a Tool Box Talk by each **Contractor**.

E. Employee Involvement Plan

1. The Project Management Team shall require the active participation of project management and staff, subcontractor management, staff, and labor forces, and labor force representatives.
2. The STP **Project Manager** and **Project Safety Manager** shall establish a Project Safety Committee. The Safety Committee should consist of representation by the following, at a minimum:
    a. The STP **Project Manager**;
    b. The STP **Project Safety Manager**;
    c. The STP **Superintendents**
    d. Trade stewards (one per each trade);
    e. Tradesmen (at least one per each contractor on the project). The tradesman shall either be selected voluntarily by the employer, or where volunteers are not provided, shall be selected by the employer;
    f. Contractor **Safety Representatives**, where required by this Manual.
3. The Safety Committee shall meet no less than once per month. The Safety Committee meeting shall be coordinated and chaired by the **Project Safety Manager**, and the meeting shall be documented. The meeting shall consist of the following, at a minimum:
    a. Review of incidents and accidents from the previous month, including corrective actions and responsibilities;
    b. Review of upcoming project operations and activities;
    c. Review of the current project safety performance (incident rates, Audits, etc.);
    d. Communication of Safety Bulletins from the previous month;
    e. Participation by the attendees where project hazards observed by the attendee are discussed and reviewed;
    f. Participation by the attendees regarding feedback from the tradesmen;
    g. A project walkthrough focused on identification of best practices and non-compliant conditions and practices.
4. The minutes from the Safety Committee meeting shall be distributed to the each attendee, each project **Contractor**, **WSDOT** and the **EVP**
5. The STP **Project Manager** or **Project Safety Manager** may elect to establish other employee participation programs in addition to the Safety Committee. These may include anonymous employee suggestion boxes or recognition programs.

F. Project-Specific Health and Safety Plan

1. Within fifteen (15) working days of contract award or the **WSDOT** Notice to Proceed, The
2. **Management Team** shall finalize this Health and Safety Plan (HASP) for the project. The HASP shall be specific to the operations to be undertaken on the project, and shall incorporate the applicable elements/requirements of this Manual, as well as federal, state, and local regulations.
3. The **Project Safety Manager**, with input from the **Project Manager**, will complete the Site Specific **Safety Health and Environmental Plans (SHEMP)** for the project. These will define specific responsibilities, programs, training and recordkeeping to require compliance with the OSHA requirements for the project.
4. The Project HASP shall be submitted to the **EVP** and **CSM** for review and comment. The **Management Team** will incorporate the comments and submit to the **Owner** if required

G. Roles and Responsibilities

1. STP **Project Executive/Manager/General Superintendent**:
    a. Has the overall responsibility and authority for management of the safety program;
    b. Responsible for coordination of **Subcontractor** operations and activities so as to minimize or eliminate hazards associated with multiple **Contractor**/trade work;
    c. Responsible for supporting the **Project Safety Manager** in his or her efforts to administer the project safety program;
    d. Shall conduct one (1) formal, documented safety inspection of the project per month via the required inspection method (Audit);
    e. Shall co-chair the Monthly Safety Committee Meeting along with the **Project Safety Manager**, and shall attend each Monthly Project Management Safety Meeting.
2. STP **Area Superintendent**:
    a. Has the overall responsibility and authority for management of the safety program for all employees;
    b. Shall enforce compliance with Project HASP, OSHA Standards, this Manual, and all other federal, state, and local regulations;
    c. Is responsible for coordination of project workforces and **Subcontractors** so that a logical, systematic progression of work takes place;
    d. Shall assist **Foremen/Subcontractors** in pre-planning their operations to prevent personal injury and property damage. Pre-Task Plans for new or modified operations are to be reviewed prior to the operation's commencement;
    e. Shall schedule, distribute notification, and chair the weekly Coordination/Safety meetings;
    f. Shall notify **Subcontractors** of a safety noncompliance in compliance with Section 26.B of this Manual;
    g. Shall assist in the investigation of accidents, incidents and near misses in conjunction with the **Foreman**, **Subcontractor Safety Representative**, union steward, and **Project Safety Manager**;
    h. Shall conduct one (1) formal, documented safety inspection of the project per week via the required inspection method;
    i. Shall attend/participate in each pre-construction safety meeting for **Subcontractors** of every tier;
    j. Shall attend each Monthly Management Safety Meeting and Monthly Mass Safety Meeting.

3. STP **Project Safety Manager/Representative**:
    a. Shall enforce compliance with Project HASP, OSHA Standards, and all other federal, state, and local regulations;
    b. Shall review subcontractor Safety and Health Plans for compliance with this Manual and the Project HASP;
    c. Shall assist the **Superintendent** and/or **Project Manager** and/or **Purchasing Agent** in compiling and review bid documents PRIOR to their release to contractors for bidding. The Project Safety Manager shall assist in requiring that all necessary scope and budgetary items are appropriately listed on the bid documents for each contractor/ trade/operation, etc.
    d. Shall implement a Safety and Health Orientation process for all employees assigned to the Project.
    e. Shall assist **Subcontractors** in pre-planning their operations to prevent personal injury and property damage. Pre-Task Plans for new or modified operations are to be reviewed prior to the operation's commencement;
    f. Shall schedule, distribute notification, and co-chair the Monthly Safety Committee Meeting, and shall chair the Monthly Mass Safety Meeting;
    g. Shall issue Safety Bulletins in compliance with Section 26.D of this Manual;
    h. Shall receive all safety-related correspondence and copies of all incident and accident reports.
    i. Shall notify **Subcontractors** of a safety noncompliance in compliance with Section 26.B of this Manual;
    j. Shall assist in the investigation of accidents, incidents and near misses in conjunction with the **Foreman**, **Subcontractor Safety Representative**, union steward, and **Area Superintendent**;
    k. Shall head up the Root Cause Analysis for accidents, incidents and near misses.
    l. Shall conduct one (1) formal, documented safety inspection of the project per day via the required inspection method.
    m. Shall attend/participate in each pre-construction safety meeting for **Subcontractors** of every tier.

4. Subcontractor **Project Manager**/**Superintendent**/**Foreman**:
    a. Shares the overall responsibility and authority for management of the safety program for assigned employees;
    b. Shall enforce compliance with Project HASP, OSHA Standards, this Manual, and all other federal, state, and local regulations;
    c. Is responsible for coordination of workforces and lower-tier **Subcontractors** so that a logical, systematic progression of work takes place;
    d. Shall pre-plan operations to prevent personal injury and property damage. Pre-Task Plans for new or modified operations are to be prepared, reviewed, and submitted to the general contractor **Area Superintendent** prior to the operation's commencement for review;
    e. Shall require that **Employees** under his/her command have the adequate training and knowledge to complete the task at hand;
    f. Shall attend the Monthly Project Management Safety Meeting;
    g. Shall investigate all accidents, incidents and near misses in conjunction with the general contractor **Area Superintendent** and **Project Safety Manager**, subcontractor **Safety Representative**, and union steward;
    h. Shall require each employee's attendance at the project Safety Orientation.
    i. Shall attend each Monthly Management Safety Meeting and Monthly Mass Safety Meeting.

5. Subcontractor **Safety Representative**
    a. Shares the overall responsibility and authority for management of the safety program for assigned employees;
    b. Shall enforce compliance with Project HASP, OSHA Standards, this Manual, and all other federal, state, and local regulations;
    c. Shall pre-plan operations to prevent personal injury and property damage. Pre-Task Plans for new or modified operations are to be prepared, reviewed, and submitted to the general contractor **Area Superintendent** prior to the operation's commencement for review;
    d. Shall require that **Employees** under his/her command have the adequate training and knowledge to complete the task at hand;
    e. Shall attend the Monthly Management Safety Meeting and Monthly Mass Safety Meeting;
    f. Shall investigate all accidents, incidents and near misses in conjunction with the general contractor **Area Superintendent** and **Project Safety Manager**, subcontractor **Foreman**, and union steward.
    g. Shall train their employees to perform their work in a safe manner and to recognize and correct potential and actual hazards and unsafe acts.
    h. Shall make a minimum of one (1) complete safety inspection of their operations per day with a written report to the **STP Project Safety Manager** noting corrective action to identified hazards.
6. Project employees
    a. Shall attend the Project Safety Orientation and complete the form prior to beginning work on the project;
    b. Shall perform their work in a safe manner for prevention of accidents to themselves, fellow **Employees**, the general public, and property of all concerned;
    c. Shall attend and participate in weekly tool box talks;
    d. Shall alert and notify their **Foreman** of hazards and unsafe acts;
    e. Shall comply with the Project HASP, OSHA Standards, this Manual, and all other federal, state, and local regulations.

All project employees, regardless of position or title, have authority to halt life-threatening situations. Where an actual or perceived life-threatening situation is observed, the observer shall immediately halt the operation or situation, and shall notify the appropriate project personnel including the **Project Manager**, **Project Safety Manager**, **Superintendent**, and/or **Foreman**.

H. Safety Recognition Program

1. The project shall develop and initiate a Safety Recognition Program, specific to the project. The Program shall recognize achievements, either individual or project-wide.
2. The Program's criteria and methodology shall be in writing, and shall be submitted to the **EVP** and **CSM** for review and approval prior to implementation.

Section 25 – Safety Management Systems

I. Safety Representation/Project Coverage

1. It is the intent of **STP Senior Management** to require a Safety Professional/representative to be present on the project at all times during construction. The following requirements apply:
    a. All WSDOT contractual expectations will be met by the Project management team.
    b. The Project will be evaluated by the **EVP and CSM** with input from the **Project Manager** as to the hazards presented and qualifications regarding the level of safety experience/credentials needed will be set and fulfilled.
    c. The project will have, as part of the Management Team, qualified Safety Representation identified in the organizational chart for the project.
    d. The **EVP** and **CSM** will approve the final selection of project safety coverage.
2. Each **Subcontractor** shall designate and provide a full-time **Safety Representative**. The following requirements apply to **Safety Representatives**:
    a. The name and qualifications of the **Safety Representative** must be submitted to the **Project Manager** prior to the Contractor mobilizing at the project.
3. The **Project Safety Manager/Representative** and **Safety Representative** shall be on site on a full-time daily basis from the time of mobilization onto the project, through the completion of the final punchlist.

J. Subcontractor Safety and Health Plans

1. Each **Subcontractor** shall submit to **STP** the company's Safety and Health Plan for review. The **Project Safety Manager** shall review and provide comments for each Safety and Health plan submitted.
2. Each **Subcontractor**, by contract language, is required to comply with the requirements of this Manual.
3. Each subcontractor shall submit to DUSA the name(s) of the Safety Representative and competent person(s) by indicating on the Subcontractor Safety and Health Commitment Agreement. A principal of the company must verify the choices and indicate on the agreement. Qualifications for the submitted employees must be documented

Section 26 – Safety Meetings

A. Annual Program Evaluation and Improvements Plan Meeting

1. Each project shall hold a Program Evaluation and Improvements Plan Meeting at least once per year. The meeting shall be conducted in accordance with Section 26.C of this Manual.

B. High Hazard Planning Meeting

1. Prior to commencement of each high hazard operation conducted on the project, **STP** shall coordinate and chair a High Hazard Planning Meeting.
2. The STP **Project Manager**, **Project Safety Manager**, **General Superintendent**, and **Area Superintendent** (if assigned), the subcontractor's **Project Manager**, **Safety Representative**, and **Foreman** shall attend this meeting. WSDOT may be invited to attend this meeting.
3. The following activities/operations require that a High Hazard Planning Meeting be held:
    a. Critical Lifts
    b. Energized Electrical Work
    c. Blasting
    d. Hazardous Waste Remediation or Abatement
    e. Leading Edge Work
    f. Maintenance and Protection of Traffic
    g. Precast Concrete Erection
    h. Scaffold Erection
    i. Steel Erection (meeting shall also comply with 29CFR Part 1926.752)
    j. Structural Demolition
    k. Tunneling
4. The High Hazard Planning Meeting shall address the policies, procedures, coordination, communication, and training that will be required or employed during the activity. The meeting shall be documented, and meeting minutes shall be distributed by the **Project Manager** to all attendees.

C. Monthly Management Safety Meeting

1. The **STP Project Manager** and **Project Safety Manager** shall coordinate and co-chair a Management Safety Meeting at least once per month.
2. The following persons shall attend the meeting:
    a. STP **Project Manager**
    b. STP **Project Safety Manager**
    c. STP **Project Superintendents**
    d. Subcontractor **Safety Representatives**
    e. Subcontractor **Foremen** and **Competent Person**
    f. Union Stewards

    The WSDOT Safety Representatives should be invited to attend the Monthly Management Safety Meeting.
3. The following shall be reviewed at the Monthly Management Safety Meeting:
    a. Review of incidents and accidents from the previous month, including corrective actions and responsibilities;
    b. Review of upcoming project operations and activities – pre-planning;
    c. Review of the current project safety performance (incident rates, Audits, etc.);
    d. Communication of Safety Bulletins from the previous month;
    e. Training and discussion on a special safety topic, pertinent to the project.
4. The meeting shall be documented, and meeting minutes shall be distributed by the **Project Manager** to all attendees. Each **Subcontractor** shall use the minutes of the meeting to conduct a tool box talk with their respective employees.

Section 26 – Safety Meetings

D. Monthly Mass (All Hands) Safety Meeting

1. The STP **Project Safety Manager** shall coordinate and chair a Mass Safety Meeting at least once per month. This meeting may be held in the field or in a room large enough to safety hold the number of attendees. This meeting is expected to be concise and brief.
2. All project **Employees**, staff, and management shall attend this meeting. The WSDOT Safety Representative(s) should be invited to attend the Monthly Mass Safety Meeting.
3. The following shall be reviewed at the Monthly Mass Safety Meeting:
    a. A brief review of incidents and accidents from the previous month, including corrective actions and responsibilities;
    b. Distribution of Safety Bulletins from the previous month;
    c. A brief training session on a special safety topic, pertinent to the project.
4. A meeting outline shall be distributed to each attendee at the meeting. Where comments or suggestions are provided by an attendee during the meeting, the suggestion/comment shall be documented and addressed.

E. Monthly Safety Committee Meeting

1. The project shall hold a Safety Committee Meeting at least once per month. The meeting shall be conducted in accordance with Section 26.E of this Manual.

F. Owner/Designer/Contractor (ODC) Meeting

1. If ODC meetings are held, the attendees shall be briefed on the status of the project safety program, including milestones, achievements, injuries and incidents, and upcoming activities by the STP **Project Manager** or **Project Safety Manager**. It is advantageous to the efficiency of the meeting that safety be the first topic discussed.

G. Pre-Construction Safety Meeting

1. The **STP Project Manager** shall coordinate and chair a Pre-Construction Safety Meeting for each **Contractor** (of all tiers) working on the project. This meeting shall be held at least two (2) weeks prior to the commencement of the work by the **Contractor**.
2. The following persons shall attend this meeting:
    a. STP **Area Superintendent**
    b. STP **Project Safety Manager**
    c. Subcontractor **Project Manager**
    d. Subcontractor **Superintendent**
    e. Subcontractor **Foreman** and **Competent Person**
    f. Subcontractor **Safety Representative**

3. The Pre-Construction Safety Meeting shall review and address the following:
    a. **Competent Person** Requirements
    b. Coordination and logistics
    c. Electrical Safety
    d. Emergency Response Procedures and Meeting Locations
    e. Environmental Requirements
    f. Equipment Inspections
    g. Fall Protection Requirements and Practices
    h. Fire Prevention and Protection Requirements and Practices
    i. High-hazard activities
    j. Housekeeping Requirements
    k. Incident/Accident reporting procedures
    l. Insurance Requirements
    m. Major Requirements of this Manual (applicable to the **Subcontractor**)
    n. Material Deliveries and Storage
    o. MSDS Locations and Program Requirements
    p. Pre-Qualification Requirements
    q. Project Goals
    r. Project Safety Representation/Coverage
    s. Public Protection Requirements and Practices
    t. Recordkeeping
    u. Safety Meetings
    v. Subcontractor's general scope of work
    w. Submittals required by the **Subcontractor** (HASP, **Competent Person**, HazCom, etc.)
    x. Substance Abuse Program Requirements
    y. Training
4. The meeting shall be documented, and meeting minutes shall be distributed by the **STP Project manager** to all attendees.

H. Weekly Coordination and Safety Meeting

1. If Weekly Coordination Meetings (often referred to as **Foremen**'s Meetings) are held, the attendees shall be briefed on the status of the project safety program, including milestones, achievements, injuries and incidents, and upcoming activities by the STP **Project Manager** or **Project Safety Manager**. It is advantageous to the efficiency of the meeting that safety be the first topic discussed.

I. **Weekly Crew Leader-Crew Safety Meetings**

1. Crew leader-crew safety meetings shall be held at the beginning of each Task, and weekly thereafter.
2. A review of any walk-around safety inspection conducted since the last safety meeting to require the implementation of any corrective actions
3. An evaluation of any accident investigations conducted since the last meeting to determine if the cause of the unsafe acts or unsafe conditions involved were properly identified and corrected.
4. All Crew Leader-Crew safety meetings will be documented for content and participation.

Section 27- Scaffolding

A. Definitions

1. Scaffold. Any temporary elevated platform (supported or suspended) and it's supporting structure (including points of anchorage), used for supporting materials or employees or both. The term scaffold includes mast-climbing scaffolds.

B. General Requirements

1. All scaffold work and practices shall, at a minimum, comply with OSHA29CFR Part 1926.450 through 1926.452, and 1926.454, including all appendices, the requirements outlined in this Manual, and the manufacturer's recommendations and requirements.
2. Each activity requiring scaffold erection, dismantling and/or use will have a completed PTP prior to the activity taking place.
3. **STP** and any **Subcontractor** requiring employees to erect, dismantle, adjust, or work on or from scaffolds is required to have a scaffold safety program, specific to that operations, which meets or exceeds the guidelines listed in this Manual (PTP). Include any manufacturers instructions.
4. The **Competent Person** shall require that all **Employees** potentially exposed to hazards associated with scaffolds possess the knowledge and skill required to perform the duties for which they are assigned. In addition, a **PTP** shall be completed prior to any operation, hazards shall be clearly identified, and hazard controls defined. The **PTP** shall be reviewed with the work crews daily prior to the start of work, and where conditions change.
5. Fall protection requirements for scaffolds are outlined in Section 13 of this Manual.
6. Scaffolds under erection or dismantling shall not be used, except where patching at tie-back locations is required during dismantling. Only the uppermost tie-back shall be removed at any one time, and only after the scaffold above the tieback has been removed.
7. The scaffold erector shall compile a PTP prior to erecting or dismantling scaffolding. The PTP shall be submitted to the STP **Area Superintendent** and **Project Safety Manager** for review and approval.
8. Mobile scaffolds (i.e. rolling scaffolds or Baker-type scaffolds) require that guardrails are installed when the working platform is equal to or greater than three (3) feet above the walking or working surface.
9. Where a mast-climbing scaffold is to be erected and used:
    a. Prior to installation of a mast-climbing scaffold, a review shall be conducted by a Registered Professional Engineer in the appropriate state. The review shall specifically include the foundation requirements and structural connection details. The Engineer's report shall be submitted to the **STP Safety Manager**, scaffold erector, and project structural engineer for review.
    b. An erection, dismantling, and inspection plan shall be submitted to **STP** prior to erection of a mast-climbing scaffold. The plan shall include, at a minimum, the procedures required to erect/dismantle/inspect the scaffold, a list of the qualified individuals who will perform the work, a Crane Hoist Plan, and fall protection procedures to be employed.
    c. The designated operator(s) shall be trained in the use, daily inspection and maintenance, and emergency procedures associated with the operation of the mast-climbing scaffold. This training shall be conducted by the manufacturer or his designee, documented, and a copy shall be provided to **STP** upon completion. Untrained operators shall not operate the scaffold.
    d. Following erection or installation, the mast-climbing scaffold shall be inspected by the manufacturer or his designee, and shall be documented. This inspection report shall be submitted to **STP** upon completion.
    e. During use of a mast climbing scaffold, guardrails shall be installed on all sides, including the front face. Where guardrails cannot be installed on the front face, manufacturer-supplied outriggers and planks shall be installed so that the opening between the structure and the platform does not exceed three (3) inches. Where the planks must be removed from the outriggers for the scaffold to ascend or descend

(i.e. around the tiebacks), fall protection shall be used by the employees on the platform.

f. Access to mast-climbing scaffolds, where the scaffold platform is equal to or greater than nineteen inches above the landing level, shall consist of a fixed stair or ladder.

C. Inspection

1. The SR99 Project will develop and implement a scaffold inspection program, specific to the project that meets the requirements of this Section, at a minimum.
2. A tag system shall be used for scaffolds erected, dismantled, and used on the project. The tag system shall use color-coded tags as follows:
   a. Where scaffolding is being erected or dismantled, or is not otherwise 100% complete and ready to use, the tag color shall be RED, and shall denote that the scaffold is not safe to use.
   b. Where scaffolding is 100% complete and ready to use, the tag color shall be GREEN.
   c. Where special requirements are necessary for scaffold users, the tag color shall be YELLOW, and shall denote the special requirements (e.g. fall protection required on outriggers, etc.)
3. An inspection tag shall be conspicuously posted at each access point onto the scaffold.
4. Where scaffolding is erected on behalf of **STP** or other **Contractor** for use by other than the erector, the scaffold erector and the owner/renter of the scaffold shall conduct a complete and thorough inspection prior to allowing employees onto the scaffold. The inspection shall be documented (Scaffold Inspection Form), and both the erector and owner/renter shall certify by signature that the inspection has been completed.
5. The **Competent Person** for each **Contractor** working on the completed/inspected scaffold shall conduct an inspection of the scaffold prior to allowing any employee to use the scaffold. The **Competent Person** shall certify by signature, date, and company name that the inspection has been completed. The signature shall be clearly denoted on the inspection tag.
6. Following erection or installation, the hoist or elevator shall be inspected by the manufacturer or his designee, and shall be documented. This inspection report shall be submitted to **STP** upon completion.

Section 28 – Signs, Signals, and Barricades

A. General Requirements

1. Signs, signals, and barricades shall, at a minimum, comply with OSHA29CFR Part 1926.200 through 1926.203, WAC 296-155-17627/296-155-310 and the requirements outlined in this Manual.
2. Where caution tape is used as a warning to employees, caution signs denoting the hazard shall be secured to the tape. Employees are allowed to pass or cross caution tape only after assessing the hazards posted on the caution signs. Caution tape and signs shall be erected around all sides of the controlled area, and at each access point.
3. Where danger tape is used as a warning to employees, danger signs denoting the hazard shall be secured to the tape. Employees, except those engaged in the operation for which the tape/signs were erected, are not allowed to pass or cross danger tape. Danger tape and signs shall be erected around all sides of the controlled area, and at each access point.

Section 29 – Steel Erection

A. General Requirements

1. All steel erection work and practices shall, at a minimum, comply with OSHA29CFR Part 1926.750 through 1926.761, including all appendices, WAC 296-155 Part P, the requirements outlined in this Manual, and the structural engineer/designer's recommendations and requirements.
2. The steel erector, after consultation with **STP,** shall provide a Site-Specific Erection Plan in accordance with WAC 296-155-703 and 29CFR Part 1926.750 Appendix A. The plan shall be submitted to the STP **Area Superintendent** and **Project Safety Manager** for review and approval.
3. Each **Contractor** that conducts steel erection is required to have a steel erection safety program, specific to that **Contractor's** operations, which meets or exceeds the guidelines listed in this Manual. This program shall be part of the **Contractor's** HASP.
4. The employer's **Competent Person** shall require that all **Employees** potentially exposed to hazards associated with steel erection possess the knowledge and skill required to perform the duties for which they are assigned. In addition, a PTP shall be completed prior to any operation, hazards shall be clearly identified, and hazard controls defined. The PTP shall be reviewed with the work crews daily prior to the start of work, and where conditions change.
5. Fall prevention or protection systems are required for all project **Employees** and trades that are potentially exposed to falls equal to or greater than six (6) feet. **Fall protection requirements for steel erection are outlined in Section 13 of this Manual.**
6. Where double connections are made during steel erection, the connection shall comply with 29CFR Part 1926.756(c). This requirement shall also apply to double connections made through or across the web of beams (not only beams over columns). Where double connections are not designed with staggered connection points, the beam to remain shall be temporarily welded or positively supported and secured so as to prevent the beam from coming dislodged should it be struck.
7. No **Employee** shall connect to a beam or column where a double connection is being made.
8. Where multiple-lift rigging and hoisting of structural steel (Christmas treeing) is proposed, the **Contractor** shall submit a Multiple-Lift Rigging and Hoisting Plan to the **Project Safety Manager** for review.
9. The **Project Safety Manager** should submit the proposed Multiple-Lift Rigging and Hoisting Plan to WSDOT for review and approval.

Section 30 – Substance Abuse Policy

A. Policy

- No employee shall report to work or be present on Company premises, in Company vehicles or engaged in company activities while under the influence of alcohol or controlled substances. The use of alcohol or controlled substances in Company vehicles is strictly prohibited. Any violation of this substance abuse policy may result in disciplinary action, up to and including termination.
- The company further reserves the right to take any and all appropriate and lawful actions necessary to enforce this substance abuse policy, including, but not limited to, inspecting employees' personal property, as well as any Company-issued lockers, desks, or other areas. Full compliance with this substance abuse policy is a condition of initial employment and continued employment.

Section 31 – Training

A. General Requirements

1. Training requirements shall comply with 29CFR Part 1926.21, Part 1910.132, all other applicable WAC and OSHA requirements, and the requirements of this Manual, at a minimum.
2. Training of employees is ultimately the responsibility of the employer.
3. Each employer shall maintain records of training, and these records shall be produced upon request. Where employees demonstrate an inadequate level of the training or understanding, the **Contractor** shall require additional training.
4. All **Employees** on the project shall possess an OSHA 10-Hour Construction Safety Outreach Training card as required. Training cards will be presented during the orientation, and copies made. **Employees** without this certification will have 30 days from the date of his or her initial entry to undergo this training and produce the training card as required.
5. All **Supervisors**, **Foremen**, and **Safety Representatives** on STP construction projects shall possess an OSHA 30-Hour Construction Safety Outreach Training card. Training cards will be presented during the orientation, and copies made. **Supervisors**, **Foremen**, and **Safety Representatives** without this certification will have 60 days from the date of his or her initial entry to undergo this training and produce the training card.

B. Orientation

1. Each **STP** project will develop a Safety Orientation Program, specific to the project. The Safety Orientation Program shall address and review the following items, at a minimum:
    a. Project Safety Goals
    b. Aerial Lift Use Requirements
    c. Blasting and tunneling precautions
    d. **Competent Person** Instructions
    e. Confined Space Permit and Procedures
    f. Lock-Out/Tag-Out Requirements
    g. Electrical Safety
    h. Emergency Response Procedures
    i. Environmental Requirements
    j. Equipment Inspection and Safety
    k. Excavation Requirements
    l. Fall Prevention and Protection Requirements
    m. Fire Prevention and Protection Requirements
    n. Hazard Communication and Container Labeling
    o. Housekeeping Requirements
    p. Incident/Accident Procedures and Reporting
    q. Safety Inspection Criteria
    r. Personal Protective Equipment Use and Limitations
    s. Public Protection
    t. Safety Management Systems Requirements and Practices
    u. Scaffold Requirements
    v. Signs, Signals, and Barricades Requirements
    w. Substance Abuse Policy Guidelines
    x. Training Requirements (OSHA 10/30, etc.)
2. Each employee entering the project shall undergo the Safety Orientation within twenty-four (24) hours of entry onto the project.
3. Each employee who has undergone the Safety Orientation shall receive a sticker for the placement on the outside of the hardhat that clearly identifies satisfactory completion of the Orientation. In addition, each employee should receive a copy of the orientation for their records and use.
4. **STP** shall maintain a log of all persons who have undergone the Safety Orientation, including the name, signature, date, and trainer's name.

C. Pre-Task Planning

1. For each task or operation undertaken at the project, the **Superintendent** with input from the **Competent Person** and/or **Safety Representative** for each **Contractor** shall compile a PTP.
2. The PTP shall break down the operation or task into basic job steps, shall identify the hazards associated with each job step, and shall identify the hazard control measures associated with each hazard. The PTP shall also include a checklist of major items (tools, equipment and materials) to be addressed in every PTP. The Pre-Task Plan Form should be used to satisfy the documentation for this requirement.
3. Following completion of the PTP and prior to commencement of the task or operation, the PTP must be submitted to the STP **Area Superintendent** and **Project Safety Manager** for review, comment, and approval.
4. The approved PTP shall be used to conduct a Pre-Task Plan Meeting with the employees who will perform the work covered under the PTP, and shall be conducted in the field by the **Competent Person** and/or **Foreman**. Each attendee shall be instructed as to the requirements listed in the PTP, and shall acknowledge this training by signing the PTP.
5. The Pre-Task Plan Meeting shall be reviewed daily prior to the start of work, as long as the task and job steps remain the same. Where the task and job steps remain the same from day to day, the PTP need not be resubmitted for approval.
6. The PTP will be amended and resubmitted where the operation or job steps change. Where changes are made and approved, the Pre-Task Plan Meeting shall be conducted again.
7. The PTP shall be posted in the immediate work area, and shall be produced upon request.
8. Each PTP will contain MSDS sheets relevant to the task described.

E. General Requirements

1. All Underground Construction, inclusive of Tunnels, Shafts and Caissons shall be done in compliance, at a minimum, with 29CFR 1926 Subpart S and WAC 296-155 Part Q.
2. **STP** will develop a program, specific to the project, which meets or exceeds the guidelines listed in this Manual.
3. Each **Contractor** requiring employees to perform work in the Underground Confines is required to have a Safety program, specific to that **Contractor's** operations, which meets or exceeds the guidelines listed in this Manual. This program shall be part of the **Project Specific** HASP.
4. The **Competent Person** shall require that all **Employees** potentially exposed to hazards possess the knowledge and skill required to perform the duties for which they are assigned. In addition, a **PTP** shall be completed prior to any operation, and hazard controls defined. The **PTP** shall be reviewed with the work crews daily prior to the start of work, and where conditions change.
5. A detailed Check in-Check out system will be developed and maintained by Dragados Project management. The **Tunneling Superintendent** and the **Safety Manager** will be responsible for maintaining the system. This system will require that above ground personnel can determine the identification of all underground personnel.
6. A communication system will be developed by Dragados Project Management that will be installed so that the use of or disruption of any one phone or signal location will not disrupt the operation of the system from any other location. These systems will be tested, at a minimum, upon initial entry and as often as necessary, to document that they are in working order. The persons responsible for this testing will be identified in the associated **SHEMP** and **PTP**
7. STP will define a rescue team. The **Project Manager**, with input from the **Superintendent** and **Safety Manager**, will access the best team to perform the task (owner input should be sought). It is assumed that Local Rescue Services are the first choice depending on location from the project. The **Safety Manager** will keep the rescue team informed of project conditions that could impact their response.

F. Air Quality Requirements

1. Underground construction operations shall be classified as potentially gassy when they conform to 29CFR 1926.800(h). The **Project Manager** and the **Safety Manager** must define and implement a gas/air monitoring program. This will be part of the **PTP** for all work activities taking place in the tunnel. Each entrance to a gassy operation shall be posted with signs notifying all entrants of the classification and a fire watch shall be maintained when hot work is performed.
2. Mobile diesel equipment used in gassy operations shall be either approved in accordance with the requirement of 30CFR Part 36 MSHA, or shall be demonstrated to be fully equivalent to such MSHA approved equipment. and shall be operated in accordance with that part. This must be documented and employees notified in the respective **PTP**. Internal combustion engines will not be allowed underground (excepting diesel powered engines on mobile equipment).
3. Fresh air must be supplied to all underground work areas in sufficient quantities to prevent dangerous or harmful accumulation of dusts, fumes, mists, vapors or gases. A minimum of 200 cubic feet of fresh air per minute shall be supplied for each employee underground. The linear velocity of air flow in the tunnel bore, in shafts and in all other underground work areas shall be at least 30 feet per minute where blasting or rock drilling is conducted, or where other conditions likely to produce dust, fumes, mists, vapors or gases in harmful or explosive quantities are present. The **Safety Manager**, or **Competent Person**, will monitor and record data, at a minimum, on a per shift basis.
4. The following must be considered , at a minimum, when considering air monitoring intervals::
    d. Proximity to fuel tanks, sewers, gas lines, old landfills, coal deposits, and swamps

e. Geological studies of the jobsite, particularly involving the soil type and its permeability
f. Presence of air contaminants in nearby jobsites, changes in levels of substances monitored on the prior shift
g. The use of diesel engines, use of explosives, use of fuel gas, volume and flow of ventilation, visible atmospheric conditions, decompression of the atmosphere, welding, cutting and hot work, and employees' physical reactions to working underground.

5. The **PTP** for all work activities taking place underground will contain information relating to the air monitoring results that will require evacuation of the area, disconnecting of power and any other emergency measures. All employees will be trained and made aware.
6. The **Superintendent** will require that NIOSH approved self-rescuers are immediately available to all employees at work stations in underground areas where employees might be trapped by smoke or gas. The **Foreman** will inspect for the availability of the rescuers at the start of each shift. Work will not commence until this has been verified.

G. Underground Operations

1. The **Competent Person** shall inspect the following as often as necessary to assure the safety of employees :
   a. Roof, face and walls of the work area at the start of each shift to determine stability (competent person shall be protected from loose ground by location, ground support or equivalent).
   b. Ground conditions along haulage ways and travelways shall be inspected as frequently as necessary to assure safe passage
   c. Loose ground that might be hazardous to employees shall be taken down, scaled or supported
   d. A competent person shall determine whether rock bolts meet the necessary torque, and shall determine the testing frequency in light of the bolt system, ground conditions and the distance from vibration sources.

H. Blasting and Drilling

1. Any blasting operation must conform to Section 4.

I. Emergency rescue plans and equipment

1. Plans for rescuing personnel who might become injured or incapacitated while underground or in a shaft or caisson shall be developed by the **Competent Person** and the Project **Safety Manager**. Plans will be incorporated in the **PTP** and posted at the jobsite. Plans will be periodically reviewed with the affected employees so they will maintain a working knowledge of emergency responsibilities and procedures.
2. Specified emergency equipment will be kept within 15 minutes of each portal or entry shaft. Inspections shall be made and documented monthly.
3. Self Rescuers must be immediately available to all employees at work stations in underground areas where employees might be trapped by smoke or gas.
4. At least one designated person shall be on duty above ground whenever personnel are underground. A designated person will be charged with an accurate account of employees underground and securing immediate aid in case of emergency.
5. Rescue team members shall be qualified in rescue procedures, the use and the limitations of breathing apparatus and the use of fire fighting equipment.
6. Rescue teams shall be kept informed of conditions at the job site which could impact their response.
7. **STP** will ensure that rescue teams are familiar with conditions at the jobsite

J. Ventilation

1. STP project will make detailed Ventilation plans prior to the start of all tunneling operations. A minimum of 200 cubic feet of fresh air per minute shall be supplied for each employee underground. The linear velocity of air flow in the tunnel bore, in shafts, and in all other underground work areas shall be at least 30 feet per minute where blasting or rock drilling is conducted, or where other conditions likely to produce dust, fumes, mists, vapors, or gases in harmful or explosive quantities are present.
2. The direction of mechanical air flow shall be reversible.
3. Mobile diesel-powered equipment used underground in atmospheres other than gassy operations shall be either approved by MSHA in accordance with the provisions of 30 CFR Part 32 (formerly Schedule 24), or shall be demonstrated by the employer to be fully equivalent to such MSHA-approved equipment, and shall be operated in accordance with that Part. (Each brake horsepower of a diesel engine requires at least 100 cubic feet (28.32 m(3)) of air per minute for suitable operation in addition to the air requirements for personnel. Some engines may require a greater amount of air to ensure that the allowable levels of carbon monoxide, nitric oxide, and nitrogen dioxide are not exceeded.)

K. Fire Prevention and Control

1. Open flames and fires are prohibited in all underground construction operations except as permitted for welding, cutting and other hot work operations. (Section 14.J.)
2. Readily visible signs prohibiting smoking and open flames shall be posted in areas having fire explosion hazards.
3. The employer may store underground no more than a 24-hour supply of diesel fuel for the underground equipment used at the worksite.
4. The piping of diesel fuel from the surface to an underground location is permitted only if::
    a. Diesel fuel is contained at the surface in a tank whose maximum capacity is no more than the amount of fuel required to supply for a 24-hour period the equipment serviced by the underground fueling station; and.
    b. The surface tank is connected to the underground fueling station by an acceptable pipe or hose system that is controlled at the surface by a valve, and at the shaft bottom by a hose nozzle; and
    c. The pipe is empty at all times except when transferring diesel fuel from the surface tank to a piece of equipment in use underground; and
    d. Hoisting operations in the shaft are suspended during refueling operations if the supply piping in the shaft is not protected from damage.
5. Gasoline shall not be carried, stored, or used underground.
6. Oil, grease, and diesel fuel stored underground shall be kept in tightly sealed containers in fire-resistant areas at least 300 feet (91.44m) from underground explosive magazines, and at least 100 feet (30.44m) from shaft stations and steeply inclined passageways. Storage areas shall be positioned or diked so that the contents of ruptured or overturned containers will not flow from the storage area.
7. Flammable or combustible materials shall not be stored above ground within 100 feet (30.48m) of any access opening to any underground operation.
8. Electrical installations in underground areas where oil, grease, or diesel fuel are stored shall be used only for lighting fixtures.
9. A fire extinguisher of at least 4A:40B:C rating or other equivalent extinguishing means shall be provided at the head pulley and at the tail pulley of underground belt conveyers.
10. Any structure located underground or within 100 feet (30.48 m) of an opening to the underground shall be constructed of material having a fire-resistance rating of at least one hour.
11. Welding, cutting, and other hot work. In addition to the requirements of Subpart J of this part, the following requirements shall apply to underground welding, cutting, and other hot work.

a. No more than the amount of fuel gas and oxygen cylinders necessary to perform welding, cutting, or other hot work during the next 24-hour period shall be permitted underground.
b. Noncombustible barriers shall be installed below welding, cutting, or other hot work being done in or over a shaft or raise.

L. Haulage

1. A competent person shall inspect haulage equipment before each shift.
2. Power mobile haulage equipment, including trains, shall have audible warning devices to warn employees to stay clear. The operator shall sound the warning device before moving the equipment and whenever necessary during travel.
3. No employee shall ride haulage equipment unless it is equipped with seating for each passenger and protects passengers from being struck, crushed, or caught between other equipment or surfaces. Members of train crews may ride on a locomotive if it is equipped with handholds and nonslip steps or footboards.
4. Powered mobile haulage equipment, including trains, shall not be left unattended unless the master switch or motor is turned off; operating controls are in neutral or part position; and the brakes are set, or equivalent precautions are taken to prevent rolling
5. Safety chains or other connections shall be used in addition to couplers to connect man cars or powder cars whenever the locomotive is uphill of the cars.
6. When the grade exceeds one percent and there is a potential for runaway cars, safety chains or other connections shall be used in addition to couplers to connect haulage cars or, as an alternative, the locomotive must be downhill of the train. Such safety chains or other connections shall be capable of maintaining connection between cars in the event of either coupler disconnect, failure or breakage.
7. Parked rail equipment shall be chocked, blocked, or have brakes act to prevent inadvertent movement.
8. Bumper blocks or equivalent stopping devices shall be provided at all track dead ends.

M. Compressed Air Work

1. STP will develop a detailed Health and Safety Plan under separate cover that defines the safety measures that will be implemented to ensure the health and safety of employees working in compressed air. The plan will contain, at a minimum, procedures for the following:
    a. Responsibilities
    b. Operating requirements
    c. Compression and Decompression
    d. Man Locks
    e. Regulation of pressure in working areas
    f. Fire Prevention and Safety
    g. Medical supervision
    h. Emergency Procedures and Pre-Task analysis
    i. Decompression tables
    j. Diagnosis and Treatment of Decompression Sickness (DCS) and Arterial Gas Embolism (AGE)

Section 32 – Tunneling

Section 33 – Visitor Policy and Release

A. General Requirements

1. All visitors to the project will be required to sign in at the STP field office at which time they will receive a brief safety orientation for the project.
2. Personnel thoroughly familiar with the safety requirements of the job will escort all visitors.
3. Prior to entering the project, all visitors must read, understand, and sign the Visitor Form.

PROJECT LABOR AGREEMENT

SR 99 BORED TUNNEL ALTERNATIVE DESIGN-BUILD PROJECT

DRAGADOS USA – TUTOR PERINI – HNTB

Washington State Department of Transportation

SEATTLE TUNNEL PARTNERS

Project Labor Agreement

Mission Statement

It is the intent of the parties to set out uniform standard working conditions for the efficient performance of the bored tunnel and related work; herein to establish and maintain harmonious relations between all parties to this Agreement; to secure optimum quality and productivity, and to eliminate strikes, lockouts or delays in the performance of the work undertaken by the Employer.

The parties are committed to providing owners and users the best value for the dollars invested. This commitment includes all contractors, subcontractors and unions who become signatory to this Agreement.

COMMUNITY WORKFORCE AGREEMENT
for the
WSDOT SR 99 BORED TUNNEL ALTERNATIVE
DESIGN BUILD PROJECT

Seattle Tunnel Partners and their subcontractors of every tier who become signatory to this Agreement shall be referred to as the "Employer." The participating unions that become signatory to this Agreement shall be referred to individually as the "Union."

This Agreement shall be effective only on the Washington State Department of Transportation SR 99 Bored Tunnel Alternative Design-Build Project, as is more fully described and intended in the Request For Proposal dated May 26, 2010, and which is incorporated herein by this reference as if fully set forth (hereinafter "the Project").

All construction work performed at temporary facilities, such as fabrication yards and/or assembly plants located at or adjacent to the Project site, which are integrated with and set up for the purpose of only servicing the construction project rather than to serve the public generally is covered by this Agreement.

ARTICLE 1
General Provisions

Section 1.1—Miscellaneous

A. This Agreement shall supersede all other agreements between the parties or between the employers and any local of the Union for any work covered herein. This is a stand-alone Agreement to be applied to the Project.

B. Wherever the male gender is used in this Agreement it shall be deemed to also apply to the female gender.

ARTICLE 2
Labor/Management Cooperation

Section 2.1—Labor/Management Relations

A. It is the intent of the parties to have Labor/Management cooperation on this Project. To that end the parties agree to support periodic meetings to discuss issues and/or concerns which may arise during the life of the project.

B. Authorized representatives of the Union shall have access to the Project provided they do not interfere with the work of the employees, and further provided that such representatives comply with the visitor and security rules established for the Project.

C. Stewards - The Union may, at its option, appoint a working steward for each shift who will be paid at the journeyman wage rate for the job classification in which employed and will be allowed reasonable time to fulfill his responsibilities for the benefit of the parties to this Agreement. Stewards shall be the last employee of each craft's workforce to be laid off provided they can perform the work required by the Employer. Prior notification of any layoff or termination shall be given to the Union. The Union acknowledges and agrees to Employer's reasonable expectation and further the Union will cooperate in supporting the Agreement language that requires stewards to be working journeymen, and the Employer will in turn allow reasonable time to fulfill their union obligations.

D. Pre-job Conference – A pre-job conference will be held with the unions prior to each contractor beginning work and will address, but not limited to, the following subjects: manning, assignment of work, subcontracting, composite crews, and portability of key personnel.

ARTICLE 3
Project Conditions

Section 3.1—Project Addendum

Addenda to this Agreement which are required to place the Employer in a more competitive position may be established by agreement between the signatory Union and the contractor. Such addendum shall be reduced to writing and shall be attached hereto and made part of the Agreement for the Project.

Section 3.2—Project Rules

A. Employment begins and ends at each project site.

B. Employees shall be at their place of work at the designated starting time and shall remain at their place during working hours until the designated quitting time. Parking will be available to Employees within a three (3) mile radius of the Project at a location designated by the Employer. Transportation will be provided by the Employer to and from the designated parking location and Project. Employees shall have the opportunity to leave their place of work 15 minutes before end of shift for travel. No other travel time or alternate parking reimbursement shall be paid by the Employer.

C. In accordance with the requirements of the Occupational Safety and Health Act, as amended, it shall be the exclusive responsibility of the Employer to ensure the safety and health of its employees, and employee compliance with any safety rules contained herein or established by the Employer. Nothing in this Agreement will make the Union liable to any employees or any other persons in the event that injury or accident occurs.

D. The Employer shall establish such reasonable project safety and work rules as appropriate. These rules will be provided to the Union and posted at the project site and may be amended by the Employer thereafter as necessary. The Union shall be notified of such amendments. Such rules shall be uniformly enforced.

E. The Employer and the Union agree that chronic and/or unexcused absenteeism is undesirable and must be controlled. Employees that develop such a record of absenteeism may be terminated and may be eligible for rehire on the Project by mutual agreement between the Union and the Employer. The Employer shall notify the Union in writing of such termination.

F. Security procedures for the control of tools, equipment and materials shall be the responsibility of the Employer. The Employer may designate and operate centrally controlled tool rooms, warehouses, and storage areas. All employees will comply with the security procedures established by the Employer.

G. Seniority shall not be recognized or applied to employees working on this Project.

Section 3.3—Safety Measures

The Employer and the employee will conform to all Federal and State health and safety regulations applicable to work covered by this Agreement and shall have adequate shelters available where necessary, with heat, where the employees can change and dry their clothes and store their tools. The Employer shall provide at all times during this project sanitary facilities consisting of a reasonable number of toilets and urinals. Fresh drinking water will be available to employees. The Employer will furnish all welding, safety and protective equipment required; including, but not limited to, leathers, hard hats, eye protection, ear protection, respirators, safety belts and lanyards, reflective vests, flagging signs and paddles.

Section 3.4—Work Stoppages and Lockouts

A. During the term of this Agreement and except as specifically provided herein, there shall be no strikes, picketing, work stoppages, slow-downs or other disruptive activity for any reason by the Union or by any employee, and there shall be no lockout by the Employer.

B. The Union shall not sanction aid or abet, encourage or continue any work stoppage, strike, picketing or other disruptive activity at any Employer's project site covered under this Agreement and shall undertake all reasonable means to prevent or to terminate any such activity. No employee shall engage in activities which violate this Section. Any employee who participates in or encourages any activities which interfere with the normal operation of the Project shall be subject to disciplinary action, including discharge. The Union shall not be liable for acts of employees for which it has no responsibility.

C. If the Union is unable to provide qualified replacements for those employees who are in violation of this Section by the beginning of the next shift, the Employer is free to hire from any source.

D. The International Union will immediately instruct, order and use its best efforts to cause the Local Union or Unions to cease any violations of this Section. An International Union complying with this obligation shall not be liable for unauthorized acts of its Local Union.

E. Any party to this Agreement may institute the following binding arbitration procedure when a breach of this Section is alleged. In the event a party institutes this procedure, arbitration shall be mandatory.

The party invoking this procedure shall immediately notify _____, who the parties agree shall be the permanent Arbitrator under this procedure. In the event that the permanent Arbitrator is unavailable at any time, the alternate permanent Arbitrator, _____, shall be immediately contacted. Notice to the Arbitrator shall be by the most expeditious means available, with notice by email, facsimile or similar means to the party alleged to be in violation and the involved Union General President.

[permanent arbitrator]'s address, phone number and fax number, are:

_____
_____
_____
_____

[alternate permanent arbitrator]'s address, phone number and fax number are:

_____
_____
_____
_____

Upon receipt of said notice the Arbitrator named above or the alternate shall designate a place for, schedule and hold a hearing within twenty-four (24) hours.

The Arbitrator shall notify the parties by email, facsimile or similar means of the place and time chosen for the session. A failure of any party or parties to attend said hearing shall not delay the hearing of evidence or issuance of an award by the Arbitrator.

The sole issue at the hearing shall be whether or not a violation of this Section has in fact occurred, and the Arbitrator shall have no authority to consider any matter in justification, explanation or mitigation of such violation or to award damages, which issue is reserved for court or other arbitration proceedings, if any. The award shall be issued in writing within three (3) hours after the close of the hearing and may be issued without a written opinion. If any party desires a written opinion, one shall be issued within fifteen (15) days, but its issuance shall not delay compliance with, or enforcement of, the award. The Arbitrator shall order cessation of the violation of this Section and other appropriate relief, and such award shall be served on all parties by hand or registered mail upon issuance.

The award shall be final, binding and non-reviewable as to the merits, and may be enforced by any court of competent jurisdiction, upon the filing of this Agreement and all other relevant documents referred to hereinabove in the following manner. Email, facsimile or similar notice of the filing of such enforcement proceedings shall be given to the other party. In the proceeding to obtain a temporary order enforcing the Arbitrator's award as issued under this Section, all parties waive the right to a hearing and agree that such proceedings may be ex parte. Such agreement does not waive any party's right to participate in a hearing for a final order of enforcement. The Court's order or orders enforcing the Arbitrator's award shall be served on all parties by hand or by delivery to their last known address or by registered mail.

Any rights created by statute or law governing arbitration or injunction proceedings inconsistent with the above procedure, or which interfere with compliance therewith, are hereby waived by the parties to whom they accrued.

The costs of the arbitration, including the fee and expenses of the Arbitrator, shall be divided equally between the parties to the arbitration.

The procedures contained in this Section shall be applicable only to alleged violations of this Section. Discharge or discipline of employees for violation of this Article shall be subject to the grievance and arbitration procedures of Section 6.1.

Section 3.5—Equal Employment Opportunity

It is agreed that affirmative action shall be taken to afford equal employment opportunity to all qualified persons without regard to race, religion, creed, color, age, sex, or national origin, physical or mental disability, marital status, disabled veterans, Vietnam-era veterans or any other reasons prohibited by law. This shall be applicable to all matters relating to hiring, training, promotion, transfer or termination of employees. Furthermore, the parties agree to cooperate to the fullest extent with the intent and purpose of the applicable regulation of the Civil Rights Act of 1964 and 1991 and Executive Order No. 11246 as amended by Executive order No. 11375 and any applicable State or local government requirements and owner contract requirements.

Section 3.6—Substance Abuse Programs

A. The parties to this Agreement do hereby recognize the need to provide a drug-free and alcohol-free workplace.

B. In order to produce as safe a workplace as possible, it is understood and agreed that the parties abide by the rules and provisions of a mutually agreed upon substance abuse program which may include the following types of testing: pre-employment, reasonable suspicion, post incident, and random where allowed by law. The parties to this Agreement agree to comply with a mutually agreed upon, third party administered, substance abuse program which includes independent testing and medical review officer, or any program mandated by the owner of the project. Further the Employer may utilize a third party administered "quick testing" procedure as an initial screening of employees. All "quick test" positives will be subject to full testing procedures to verify the positive results.

C. Any disputes under this Article shall be subject to the grievance procedure. Section 6.1

Section 3.7—Intent of the Parties

A. It is intended that this Agreement shall not violate any applicable Federal or state law, including prevailing wage laws, but if any condition is held to violate any law, that portion of the Agreement shall be considered null and void, but the remainder of the Agreement shall continue in full force and effect.

B. The parties agree that the total results of their understanding are embodied in this Agreement, including addenda, and no party is required to render any performance or recognize any practice not set forth herein.

C. This Project Labor Agreement (including its signatory Union local collective bargaining agreements in effect on NTP2) shall apply to all covered Project work, notwithstanding the provisions of any other local, area and/or national agreements which may conflict with or differ from the terms of this Agreement. The local collective bargaining agreements in effect on NTP2 shall apply for the life of the Project. Notwithstanding the foregoing, the Elevator Constructors' National Agreement shall be applied to work falling within the jurisdiction of the Elevator Constructors, except that Article 3, Section 3.4; Article 6, Section 6.1; and Article 6, Section 6.2 of this Agreement shall prevail and be applied to such work. The local collective bargaining agreements to this Agreement do not constitute the endorsement of any claim of jurisdiction over work, which claim must be

resolved under the provisions of this Agreement. Nor do the local collective bargaining agreements constitute endorsement of any claim that a particular prevailing rate of wage or scope of work applies to Project work. Where a subject is covered by the provisions of this Agreement, this Agreement shall prevail over the terms in a local collective bargaining agreement relating to the same subject. Where this Agreement does not address a subject that is addressed in a local collective bargaining agreement, the relevant terms in the local collective bargaining agreement shall apply for work covered by such agreement. Furthermore, when an issue is resolved under the terms of a particular collective bargaining agreement, members of other trades not covered by that particular collective bargaining agreement shall not achieve a similar result by way of "Parity", "Most Favored Nations", or "Me Too" agreements or clauses in their own collective bargaining agreement or the collective bargaining agreement used to resolve the issue. Collective bargaining agreements open for negotiations prior to NTP2 shall not contain newly negotiated provisions detrimental to the Project.

D. No Employer shall be required to sign any other agreement with any signatory Union as a condition of performing work within the scope of this Agreement.

E. The signatory Union agrees that it will not support in any manner any Union which refuses or fails to become signatory to this Agreement, nor will they request an Employer to use an unsigned Union on any project.

Section 3.8—Subcontracting

A. Any employer bidding as a general contractor shall notify any potential subcontractor of the existence of the terms and conditions of this Agreement.

B. In the event the Employer subcontracts out any work covered by this Agreement, such subcontractors, at all tiers, shall become signatory to this Agreement, prior to beginning work on the Project.

C. Whenever the Employer is obligated to satisfy DBE participation requirements the Union whose work is involved and the Employer, by mutual agreement, may waive Section 3.8 (B) in the event the Employer is unable to find qualified, and competitive DBE subcontractors.

D. When potential union subcontractors are not available in the locality of the jobsite to perform the work and the Employer receives no competitive bids, by mutual agreement, the Union whose work is involved and the Employer may waive Section 3.8 (B).

E. WSDOT, the Employer and the Unions shall commit to joint outreach efforts to DBE subcontractors and other DBE community groups throughout the Seattle Area to promote DBE work opportunities available on the WSDOT SR 99 Bored Tunnel Alternative Design Build Project.

ARTICLE 4
Wage Rates and Fringe Benefits

Section 4.1—Wage Rates and Fringe Benefits

A. The Employer recognizes the applicable Federal and/or State Prevailing Wage Rates in effect at the time the project is bid. Further, the Employer will recognize all changes of wages and fringes on the effective date of the individual collective bargaining agreements, including foreman and general foreman scales. Wage rates become effective the first full payroll period following the effective date. Wages shall be paid weekly on an established pay day before quitting time. Employees being discharged shall be paid at the time of dismissal. Employees who quit shall be paid on the next regular pay day by mail to their last known address unless such employees give adequate notice to do otherwise.

B. The work week for payroll purposes will begin with the first or day shift on Monday morning and end on the following Monday morning (the work week for any particular project may be modified by mutual consent). Employees shall be paid on Friday before quitting time for all work performed during the preceding work week. Any employee desiring to leave the job before the end of the work day on Friday without prior approval will wait until the next work day to be paid. In the event of nonpayment of wages, the Union may take any appropriate action it deems necessary and the Union will not be considered in violation of Article 3 Section 3.4 should a work stoppage occur.

C. The Employer will be furnished appropriate trust documents by the Union covering funds into which contributions shall be made. The Employer will contribute to, and hereby becomes party to and is bound by bona fide pension, vacation, health and welfare, apprenticeship and training funds covering employees under this Agreement. Industry Advancement or Promotion Funds called for in local labor agreements may be paid at the discretion of the Employer.

D. If payment for contributions as defined above are not received by the fund offices by the date prescribed by the appropriate trust funds for hours worked the previous month, the Health and Welfare Fund office or Pension Fund office will notify the Employer of such delinquency. If after five (5) working days from such notice, all delinquencies have not been paid in full, it is agreed that the Union may take any appropriate action it deems necessary in order to collect such delinquent contributions, and the Union will not be considered in violation of Article 3 Section 3.4 of this Agreement should a work stoppage occur. The provisions of this section shall not be applicable to any disputes covered by Article 6 Section 6.2 (Jurisdictional Disputes) or Article 6 Section 6.1 (Grievance Procedure) of this Agreement. In the event that a suit is instituted either by the Union or Trustees of said funds, the delinquent Employer shall be obligated to pay all costs of collection, including reasonable attorney's fees and court costs, in addition to any penalties, late payment charges, or liquidated damages provided for in the applicable trust agreement.

Section 4.2—Hours of Work, Overtime and Shifts

A. Hours of Work - The standard work day shall consist of eight (8) hours of work scheduled between 6 a.m. and 6 p.m. with one-half hour designated as an unpaid period for lunch. The starting time may be different (staggered) on a crew basis. The standard work week shall be five (5) days of work, Monday through Friday. Nothing herein shall be construed as guaranteeing any employee eight (8) hours of work per day or forty (40) hours of work per week.

B. Overtime - All hours worked in excess of eight (8) hours per day, forty (40) hours per week, or outside of regular shift, Monday through Friday and Saturday shall be paid at the rate of time and one-half the regular hourly rate, except as provided elsewhere in this Agreement. All work performed on Sundays and holidays shall be paid at the rate of two (2) times the regular hourly rate, except as provided elsewhere in this Agreement. There shall be no pyramiding of overtime pay. All overtime shall be in compliance with applicable State and Federal prevailed wage requirements.

C. Shifts - Shifts may be established for some or all crews when considered necessary by the Employer. When three (3) shifts are worked, the first, or day shift shall be established on an eight (8) hour basis, the second shift shall be established on a seven and one-half (7 ½) hour basis and the third shift shall be established on a seven (7) hour basis. The pay for the second and third shifts shall be the equivalent of eight (8) hours pay at the employee's regular hourly rate. When shift work is established, it must continue for a minimum of three (3) consecutive days. If only two shifts are to be worked, each shift will work eight (8) hours for eight (8) hours pay. There shall be no split shifts. Shifts may be staggered on a crew basis. Other shift provisions may be established on a pre-bid basis by mutual consent of the parties.

D. Four-Tens - The Employer may, at its option, schedule the work for four (4) ten (10) hour days scheduled start times between 6 a.m. and 6 p.m., with Friday as a make-up day for inclement weather only. On this schedule, all hours worked in excess of ten (10) hours per day and forty (40) hours per week shall be paid

at the rate of time-and-one-half the regular hourly rate. Prior to implementation, the Employer must notify the Union within forty-eight (48) hours.

E. Holiday Week: In the event that a holiday is celebrated during the week (Monday through Friday), the remaining four days of the week may be worked as a four ten shift at the straight time rate.

F. Meal Period - A regular uninterrupted lunch period of not less than one-half (½) hour or more than one (1) hour shall be established within one (1) hour of mid-shift but in no event longer than five (5) hours from the beginning of the shift. If an employee is required to work more than five (5) hours from the beginning of the shift without an uninterrupted lunch period, he/she shall be paid one-half (½) hour at the applicable overtime rate and in addition be given adequate time to eat his/her lunch. If the employee is not given a minimum of an uninterrupted ½ hour to eat, he/she shall then receive an additional one-half (½) hour at the applicable overtime rate.

If the employee is not given sufficient time to eat his/her lunch during his/her regular shift, an additional one-half (½) hour shall be paid if required to work longer than ten (10) hours.

The employee's meal periods may be staggered on an individual basis.

Employees will be expected to take their meal at their work location. Adequate sanitary and restroom facilities will be provided at the work location to allow the employees to wash-up before and after their meal. The Employer shall furnish warm, dry, lighted rooms of ample size equipped with heat for drying clothes and with benches and tables for use during meal periods. These are to be situated close to the site of the work and shall not be used for storage of materials or equipment.

Section 4.3—Reporting Pay

Any employee who reports for work and for whom no work is provided shall receive two (2) hours pay provided the employee remains available for work. Any employee who reports for work and for whom work is provided shall be paid for actual time worked but not less than four (4) hours provided the employee remains available for work. If the job is shut down because of weather, employees shall be paid for actual time worked but not less than two (2) hours. Procedures for prior notification of work cancellation shall be determined at the pre-job conference.

Section 4.4—Make-Up Day

A. In the event the contractor is unable to work forty (40) hours in any work week due to inclement weather, Saturday may be used as a voluntary make-up day.

B. All make-up hours worked on Saturday (up to 40 hours) shall be paid at the straight time rate of pay. When a make-up day is implemented it must be scheduled for a minimum of eight (8) hours. The make-up day may not be utilized on an individual employee basis or to make up holidays. Make-up days may be implemented on a pre-established crew-by-crew basis.

C. Employees, who agree to work a make-up day but fail to report to work on a scheduled make-up day, may be subject to discharge in accordance with Article 3, Section 3.2 (E) of this Agreement.

Section 4.5—Union Security

All employees who are members of the Union on the effective date of this Agreement shall, as a condition of employment, maintain their membership in the Union. All employees who are not members of the Union, and all employees who are hired thereafter, shall become and remain members of the Union as a condition of employment not later than the eighth (8th) day following the beginning of their employment, or the effective date of this Agreement, whichever is the later. Failure of any employee to comply with the provisions of this

section shall, upon the written request of the Union, result in the termination of such employee. The Employer shall not be required to terminate any employee for non-membership in the Union, (a) if it has reasonable grounds for believing that such membership was not available to the employee on the same terms and conditions generally applicable to other members, or (b) if it has reasonable grounds for believing that membership was denied or terminated for reasons other than failure of the employee to tender the periodic dues and initiation fees uniformly required as a condition of acquiring or retaining membership. Neither the Union nor the employee shall hold the Employer liable for complying with the Union's request in this matter.

Section 4.6—Check-Off

The Employer shall honor Union dues and initiation fees check-off pursuant to receipt of properly authorized dues deduction cards signed by its employees, along with other lawful authorizations from employees providing for deductions from wages.

Section 4.7—Apprentices

A. Recognizing the need to maintain continuing support of programs designed to develop adequate numbers of competent workers in the construction industry, the Employer will employ registered apprentices in the Union.

B. The parties agree to set a minimum of State Apprenticeship Council (SAC) Apprenticeship Goals of fifteen percent (15%) of all craft hours and should be established in line with Local Standards.

C. Helmets to Hardhats

1. The parties agree to facilitate the entry into the building and construction trades veterans who are interested in careers in the industry. The parties agree to utilize the services of the Center for Military Recruitment, Assessment and Veteran Employment (hereinafter "Center") and the Center's Helmets to Hardhats" program to serve as a resource for preliminary orientation, assessment of construction aptitude, referral to apprenticeship programs or hiring halls, counseling and mentoring, support network, employment opportunities and other needs as identified by the parties.

2. The parties agree to coordinate with the Center to create and maintain an integrated database of veterans interested in working on this Project and of apprenticeship and employment opportunities for this Project. To the extent permitted by law, the Unions will give credit to such veterans for bona fide, provable past experience.

Section 4.8—Holidays

A. Recognized holidays shall be as follows: New Year's Day, Memorial Day, Fourth of July, Labor Day, Thanksgiving Day, day after Thanksgiving and Christmas Day. In the event a holiday falls on Sunday, the following day, Monday, shall be observed as such holiday. Monday holidays shall be honored in keeping with Federal law. There shall be no paid holidays. If employees are required to work on a holiday as observed, they shall receive double the straight time rate of pay, except as provided elsewhere in this Agreement.

ARTICLE 5
Management Rights

Section 5.1—Management Rights

A. The Employer retains and shall exercise full and exclusive authority and responsibility for the management of its operations.

B. The Employer will be the judge in determining the competency and qualifications of applicants and employees with the right to hire, reject, or terminate for just cause and will be responsible for determining a fair day's work for employees covered by this Agreement.

C. Equipment Manning Requirements. The Employer intends to determine the number of employees required to perform the specific work activity, including the manning requirements and operation of equipment and vehicle. The Employer may also require operators and drivers to be moved from one piece of equipment or vehicle to another, as job conditions require. The Employer will in turn recognize the appropriate rate of pay for employees who are required to operate multiple equipment or vehicles during the same workday.

D. The selection of master mechanics, general foremen and foremen shall be entirely the responsibility of the Employer. Master mechanics, general foremen and foremen who have been in the employ of the Employer for one year or more, may be transferred from project-to-project. The transfer of other key personnel shall be determined at the pre-job conference.

E. This Agreement shall not apply to work of superintendents, supervisors (non trade working), staff engineers or designers; quality control and quality assurance personnel; timekeepers; clerks; office workers, including messengers, guards, safety personnel, emergency medical and first aid technicians; and other professional, engineering, administrative, environmental compliance employees (non trade working), and other non-construction trade labor which may be identified during the course of the Project, including but not limited to:

Furniture, fixture and equipment installers retained by the Owner to be performed after Signatory Employers have completed construction related work and or contract completion date.

Employers and their Employees directly controlled by the Owner.

Employees engaged in any work performed on or near, or leading to or into, the Project site by state, county, city or other governmental bodies, their other retained contractors, or by public utilities or their contractors, or by other public agencies or their contractors.

Employees engaged in warranty functions and warranty work, and on-site supervision of such work.

Off site Vendors and manufacturers and delivery of their products to the project site.

Section 5.2—Selection of Employees

A. The greatest advantage in working with the Union is the ability of the Employer to acquire an immediate and continuous source of skilled applicants. Within the Union there exists the capability to activate a recruiting network throughout the United States to ensure a steady flow of skilled applicants to meet project schedules.

B. The Employer shall request and the Union shall refer applicants for the various journeymen and apprentice classifications covered by this Agreement as required by the Employer on its projects.

C. The Union represents that its local unions administer and control their referrals in a nondiscriminatory manner and in full compliance with Federal, state and local laws and regulations which require equal employment opportunities and non-discrimination.

D. The Union will exert its utmost effort to recruit sufficient numbers of skilled applicants to fulfill the workforce requirements of the Employers. In the event the referral facilities maintained by the Union does not refer the required number of qualified applicants requested by the Employer within a forty-eight (48) hour period after such request is made (Saturdays, Sundays, and holidays excepted), the Employer may withdraw the request and employ applicants from other sources.

E. In the event the local unions fail to refer a sufficient number of skilled applicants in accordance with Section D and Section F of this Article, the Employer may request assistance from the respective International Union, which shall then recruit applicants from other local unions or other sources in an effort to meet the workforce requirements of the Employer.

F. The Union agrees to engage in active recruitment of minority and female applicants and to make every effort to refer to the Employer sufficient numbers of minority and female applicants to assist in meeting required employment goals.

G. When the Employer does not fill master mechanic, general foremen, foremen and key personnel positions in accordance with Article 5, Section 5.1 (D) and must recruit, it is understood that the Employer will meet and consult with the Union and give primary consideration to qualified individuals available in the local area. After giving such consideration, the Employer may select such individuals from other areas.

Section 5.3—Portability of Employees

A. It is the intent of the parties to promote the use of locally available, and skilled craft labor provided through the local collective bargaining agreement.

B. The Employer, by mutual agreement with the respective Union, may transfer construction employees represented by the signatory Local Unions to this Project to meet manning requirements of the job.

Section 5.4—Composite Crews

The Employer shall assign work on the basis of traditional work jurisdictional lines. However it is understood that the Employer may use composite crews for certain work activities to achieve efficient production. The make-up of these composite crews shall reflect the percent of work traditionally done by each craft. When such circumstances exist, the Employer shall, at a pre-job conference, or prior to implementation, discuss the work involved and the make-up of the crews. In the performance of such work, all employees will perform the work they are assigned.

ARTICLE 6
Dispute Resolution

Section 6.1—Grievance Procedure

A. Any dispute alleging a violation of this Agreement (excluding jurisdictional disputes) shall be resolved in accordance with the procedures set forth herein. Jurisdictional disputes shall be resolved in accordance with Section 6.2 of this Article. No grievance shall be recognized unless called to the attention of the Employer by the Union, or to the Union by the Employer within seven (7) calendar days after the alleged violation was committed.

Step 1. The dispute shall be referred to the business representative of the Union involved or his designated representative and the Project superintendent and/or the Employer's representative at the construction project.

Step 2. In the event the dispute is not resolved as in Step 1 above, it shall be reduced to writing and referred to the International Representative(s) of the Union(s) involved and the Employer's representative within seven (7) calendar days for resolution.

Step 3. (a) In the event the dispute is not resolved in Step 2 above, the parties shall submit the dispute to _____, who the parties agree shall be the permanent Arbitrator under this procedure. In the event that the permanent Arbitrator is unavailable, the alternate permanent Arbitrator, _____, shall serve

as the Arbitrator to resolve the dispute. The expenses of employing the arbitrator shall be borne equally by both parties and each shall be responsible for their own attorney fees and costs. The Arbitrator shall coordinate with all parties in scheduling a mutually acceptable time and place for the hearing within a reasonable time period.

(b) The Arbitrator will issue his decision within thirty (30) calendar days from the conclusion of the hearing. The decision of the Arbitrator shall be final and binding on the parties. The Arbitrator shall have no authority to change, amend, add to, or detract from any of the provisions of this Agreement. The decision of the Arbitrator shall only apply to the Project and shall not have precedent value beyond the Project.

B. The time limits specified in the grievance procedure may be extended by mutual agreement of the parties.

Section 6.2—Jurisdictional Disputes

A. The Employer shall assign work on the basis of traditional craft jurisdictional lines. Jurisdictional assignments shall be made on the basis of agreements of record, established trade agreements and prevailing area practices.

B. All questions, complaints or disputes dealing with craft jurisdiction shall be referred to the business representatives of the local Unions involved in the jurisdictional disputes and to the Employer's authorized representative, who shall then meet at a location acceptable to all parties.

C. Jurisdictional disputes between the Unions party to this Agreement, which cannot be resolved at the local level, shall be settled and adjusted according to the Plan for Settlement of Jurisdictional Disputes in the Construction Industry. Decisions rendered shall be final and binding and conclusive on the Employer and the Unions party to this Agreement.

D. All jurisdictional disputes shall be resolved without occurrence of any strike, work stoppage, or slow-down of any nature, and the Employer's assignment shall be adhered to until the dispute is resolved. Individuals violating this section shall be subject to immediate discharge.

ARTICLE 7
Tunnel Provisions

Except as noted below, the terms, conditions of employment, wage rates and fringe benefits of the PLA apply to tunnel work.

Change House

The individual employer shall establish and maintain a change house within a reasonable distance of each portal, adit or shaft which shall include separate shower rooms, toilet facilities, lockers and heating; and drying facilities for both men and women workers in sufficient numbers to support the amount of workers in each crew.

Bull Gangs

When required to support tunnel construction operations, special shifts may be established by the Contractor for tunnel "Bull Gangs". The Contractor will provide adequate notice to the Committee as well as the employees when a special shift is required for "Bull Gang" work.

Lunch Provisions

Section 7.1 – Employees shall not be required to work more than (5) five hours from the start of the shift without at least a one-half (½) hour uninterrupted break for lunch. This lunch break shall not begin earlier then three and one-half (3 ½) after the start of shift. If they are required to work past five (5) hours, one-half (½) hour at the applicable overtime rate shall be added to the hours worked and they must then be allowed to eat their lunch. If not allowed to eat lunch, employees will be paid an additional one-half (½) hour of overtime.

Section 7.2 – Employees required to work more than two (2) hours after the end of the regular shift shall be allowed at least one-half (½) hour meal period which shall be considered as time worked, and if it is impractical for the employees to leave the job, they shall be provided a lunch by the employer. If not given the one-half (½) hour meal period, one-half (½) hour at the applicable overtime rate shall be added to the hours worked.

Section 7.3 – Employees required to work more than five (5) hours after the end of the regular shift shall be allowed at least one-half (½) hour meal period which shall be considered as time worked, and if it is impractical for the employees to leave the job, they shall be provided a lunch by the employer. If not given the one-half (½) hour meal period, one-half (½) hour at the applicable overtime rate shall be added to the hours worked.

Section 7.4 – In the event the employer establishes a ten (10) hour day, the first lunch shall be at mid shift. Employees' lunch period may be staggered during the period of three and one-half (3 ½) to five (5) hours from the start of shift to cover necessary work of a continuous nature.

Section 7.5 – For the purpose of these Tunnel Provisions, the applicable overtime rate following a delayed, missed or interrupted meal, as noted above shall be as follows:

A. In the event the rate of pay is straight time, the applicable rate will be one and one-half (1 ½) times the straight rate of pay.
B. In the event the rate of pay is time one one-half (1 ½), the applicable rate of pay is two (2) times the straight time rate of pay.
C. In the event the rate of pay is double time, the applicable overtime rate will be two and one-half (2 ½) times the straight time rate of pay.

Starting Times-Portal to Portal

Section 7.6

A. Employees working within a tunnel shall have their start time at the portal of the tunnel, at which he/she is directed by the Contractor or their Sub-Contractor to report for work on his/her shift and shall end at such portal.
B. Employees working within a shaft shall have their time start and end at the collar of the shaft.

Rubber Boots, Rain Gear and Gloves

Section 7.7

A. Rubber boots, rain gear and gloves shall be provided by the Employer.

ARTICLE 8
Duration of Agreement

Section 8.1—Term of Agreement

This Agreement including its addenda shall be effective this _____ day of _____ 2010 and shall continue in effect for the duration of the Project. Changes in the agreement may be made at any time by the mutual consent of the parties.

Section 8.2—Parties to the Agreement

The Parties to this Agreement are the signatory Unions, Seattle Tunnel Partners, and the individual companies who become signatory.

It is further agreed that the liability of the Employer(s) and the signatory individual Unions and/or the parties that become signatory to the Agreement shall be several and not joint.

ACCEPTANCE OF AGREEMENT

This Agreement, including the Addendum becomes effective upon the signing of this Agreement between the Employer and the Union and only for this Project.

INDEX

ADDENDUM TO THE COMMUNITY WORKFORCE AGREEMENT
for the
WSDOT SR 99 BORED TUNNEL ALTERNATIVE
DESIGN BUILD PROJECT

In accordance with Article 3 Section 3.1, Project Addendum, of the Community Workforce Agreement for the WSDOT SR 99 BORED TUNNEL ALTERNATIVE DESIGN BUILD Project Agreement, including this addendum, is hereby applied to cover the SR 99 Bored Tunnel and related work, which envisions project work to be conducted in King County, State of Washington. The Agreement shall apply to all onsite work performed on the Project. This Agreement shall apply to all construction work performed at temporary facilities, such as fabrication yards and/or assembly plants located at or adjacent to the Project site, which are integrated with and set up for the purpose of only servicing the construction project rather than to serve the public generally is covered by this Agreement.

The Employer is currently preparing a bid for the design, procurement and construction of SR 99 Bored Tunnel Alternative Design Build Project in King County, Washington. In support of the bid preparation and to provide responses to Section 1.5.9 of the Instructions to Proposers regarding "Employment" which is as follows:

1.5.9 EMPLOYMENT PLAN
Submit a narrative that addresses the proposer's intent on how to recruit, train and hire a qualified workforce for the duration of the project. The plan should, at a minimum include the following:

- Assessment and use of locally available skilled and craft labor
- Plans to import skilled and craft labor from outside Central Puget Sound Area.
- Anticipated training programs to be utilized prior to and during construction
- Use or implementation of a project labor agreement
- Strategy for avoiding work stoppages as the result of labor disputes

The Union acknowledges and recognizes the Employer's requirement that it submit a plan to the WSDOT which satisfactorily addresses these various elements. It is the mutual intent of the Employer and the Union that the Employer may submit this Agreement as part of its proposal, in which case, the Agreement is intended to objectively demonstrate the parties' collaborative efforts at assisting the Employer to formulate a responsive and acceptable plan.

The Employer and the Union acknowledge and agree that the Employer may not be the successful bidder on the Project, in which case the Agreement shall be automatically null and void. However, should the Employer be the successful bidder on the Project then the Employer and Union acknowledge and agree that the Agreement, as modified by this addendum shall remain in full force and effect for the duration of the Project.

The following language is intended to clarify and modify several issues contained in the Agreement. These issues are as follows:

- Cement Masons Provisions

1. Cement Mason Provisions

Because of the unique nature of the Cement Mason work, the following provisions have been included for application to Cement Mason only:

A. Start of Pour: The Cement Mason crew must be on the job at the start of the shift in which finishing will be required and assist with the pour on slab work or work preparatory to concrete finishing coming within the jurisdiction of the Cement Masons.

B. Multiple Shift Operation: There will be no shift operation on slab work exept by mutual agreement. Shifts may be established when considered necessary by the Employer.

C. Shifts and Hours of Work: If a four/ten (10) hour shift is established at the straight time rate, any Cement Mason dispatched for a one day pour will be paid at the eight (8) hour straight time plus (2) hours overtime rate.

D. Reporting and Minimum Hours Pay.

1. Cement Masons reporting for work and not put to work shall receive two (2) hours pay at the regular straight time rate unless notified not to report at the end of the previous shift or two (2) hours prior to the start of a shift. It is understood that it shall be the responsibility of the Employer to secure from each new employee a telephone number by which he can be contacted.

2. When the shift is started, the half shift shall be allowed. If the second half is started, then a whole shift shall be allowed, unless an employee leaves of his own volition or is discharged for cause. In such event, he shall be paid for actual time worked.

SIGNATURE PAGES

EMPLOYER:

Company: Seattle Tunnel Partners

Signature:

Name: ANTONIO NIEVAS

Title: E.V.P. DUSA

Date: 10/26/10

Company: Seattle Tunnel Partners

Signature: James Frost

Name: JAMES FROST

Title: EVP TPC

Date: 10/26/10

UNION:

Seattle/King County Bldg. Trades Council

Signature:

Name: Lee J. Neugent

Title: Executive Secretary

Date: 10/25/2010

NW National Construction Alliance II

Signature:

Name: John Little

Title: Officer

Date: 10/25/2010

Washington State Bldg. Trades Council

Signature:

Name:

Title:

Date:

Heat & Frost Insulators & Allied Workers Local 7

Signature:

Name:

Title:

Date:

LETTER OF UNDERSTANDING

It is hereby agreed by and between the parties, that the below referenced provisions of the Operating Engineers Local 302 Master Labor Agreement shall apply to the Community Workforce Agreement for WSDOT SR 99 Bored Tunnel Alternative Design Build Project:

SECTION 1. CREWS

A. Crews on power shovels, mucking machines, crawler cranes, floating cranes, truck cranes, whirley cranes, locomotive cranes, Hyster cat cranes, drilling machines, pile driving equipment, and trenching machines shall consist of an operator and additional engineer unless the Union agrees that an additional engineer is not necessary; and when an employee or employees additional to the operator are required by the Employer for operation, servicing, maintenance or repair on any equipment covered by this Agreement, such extra employee or employees shall be Operating Engineers.

B. Crane Oiler shall be required on Truck Cranes and All Terrain Cranes that are over 55 tons. All Rough Terrain Cranes and Self Propelled Boom type Hydraulic lifting devices and Truck Cranes that can travel on the Washington State Highway system with the boom over the front of the crane carrier without a boom dolly, trailer or any type of conveyance to transport any attachment or part or said Hydraulic Crane may be operated by one (1) Operating Engineer, No Crane shall be altered or de-rated for purposes of utilizing one (1) Operating Engineer. Crane Oilers shall be Operating Engineers.

Seattle Tunnel Partners

Signature:

Name: ANTONIO NIEVAS

Title: EVP DBSA

Date: 10/26/10

EVP TPC
10/26/10

International Union of Operating Engineers
Local 302

Signature: Eric Bellamy

Name: ERIC BELLAMY

Title: FIELD REPRESENTATIVE

Date: 10/25/2010

LETTER OF UNDERSTANDING

It is hereby agreed by and between the parties that the Employer may establish a three (3) shift operation with four (4) crews based on 21 days on and 7 days off, for the WSDOT SR 99 Bored Tunnel Alternative Design Build Project, subject to modification by mutual agreement of the parties.

Seattle Tunnel Partners

Signature: _____

Name: ANTONIO NIEVAS

Title: E.V.P. DUSA

Date: 10/26/10

Union: _____

Signature: _____

Name: _____

Title: _____

Date: _____

Union: _____

Signature: _____

Name: _____

Title: _____

Date: _____

Seattle Tunnel Partners

Signature: _____

Name: JAMES A. FROST

Title: EVP Tutor Perini Corp

Date: 10/26/10

Union: _____

Signature: _____

Name: _____

Title: _____

Date: _____

Union: _____

Signature: _____

Name: _____

Title: _____

Date: _____

Union:_____

Signature:_____

Name:_____

Title:_____

Date:_____

Union:_____

Signature:_____

Name:_____

Title:_____

Date:_____

Union:_____

Signature:_____

Name:_____

Title:_____

Date:_____

Union:_____

Signature:_____

Name:_____

Title:_____

Date:_____

Union:_____

Signature:_____

Name:_____

Title:_____

Date:_____

Union:_____

Signature:_____

Name:_____

Title:_____

Date:_____

Union:_____

Signature:_____

Name:_____

Title:_____

Date:_____

Union:_____

Signature:_____

Name:_____

Title:_____

Date:_____

Union:_____

Signature:_____

Name:_____

Title:_____

Date:_____

Union:_____

Signature:_____

Name:_____

Title:_____

Date:_____

Union:_____

Signature:_____

Name:_____

Title:_____

Date:_____

Union:_____

Signature:_____

Name:_____

Title:_____

Date:_____

Union:_____

Signature:_____

Name:_____

Title:_____

Date:_____

Union:_____

Signature:_____

Name:_____

Title:_____

Date:_____

Union:_____

Signature:_____

Name:_____

Title:_____

Date:_____

Union:_____

Signature:_____

Name:_____

Title:_____

Date:_____

Union:_____

Signature:_____

Name:_____

Title:_____

Date:_____

Union:_____

Signature:_____

Name:_____

Title:_____

Date:_____

Union:_____

Signature:_____

Name:_____

Title:_____

Date:_____

Union:_____

Signature:_____

Name:_____

Title:_____

Date:_____

Union:_____

Signature:_____

Name:_____

Title:_____

Date:_____

Union:_____

Signature:_____

Name:_____

Title:_____

Date:_____

Union:_____

Signature:_____

Name:_____

Title:_____

Date:_____

Union:_____

Signature:_____

Name:_____

Title:_____

Date:_____